This Owner's Manual is provided and hosted by Appliance Factory Parts.

Appliance Factory Parts
Experts in BBQ, Humidifier, & Appliance Parts
1-800-955-7075

# EMPIRE DVX42DP71-2 Owner's Manual

Shop genuine replacement parts for EMPIRE DVX42DP71-2

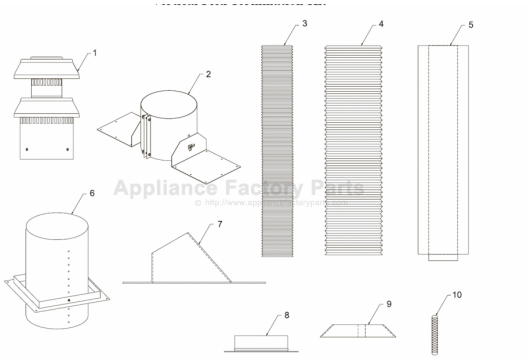


Find Your EMPIRE Fireplace Parts - Select From 642 Models

-------- Manual continues below --------

# INSTALLATION INSTRUCTIONS AND OWNER'S MANUAL

*The Studio Series Direct Vent Zero Clearance Gas Fireplace Heater*

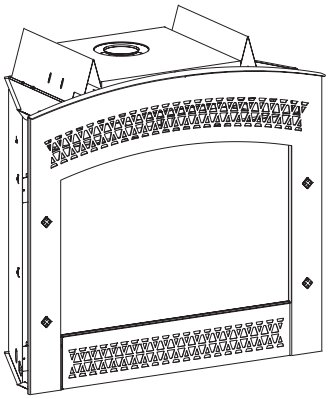

## ⚠ WARNING

**HOT GLASS** WILL CAUSE BURNS.
**DO NOT TOUCH** GLASS UNTIL COOLED.
**NEVER** ALLOW CHILDREN TO TOUCH GLASS.

**Installer:** Leave this manual with the appliance.
**Consumer:** Retain this manual for future reference.

**WARNING: If the information in these instructions are not followed exactly, a fire or explosion may result causing property damage, personal injury or loss of life.**

— **Do not store or use gasoline or other flammable vapors and liquids in the vicinity of this or any other appliance.**

— **WHAT TO DO IF YOU SMELL GAS**
- **Do not try to light any appliance.**
- **Do not touch any electrical switch; do not use any phone in your building.**
- **Immediately call your gas supplier from a neighbor's phone. Follow the gas supplier's instructions.**
- **If you cannot reach your gas supplier, call the fire department.**

— **Installation and service must be performed by a qualified installer, service agency or the gas supplier.**

## LUXURY DIRECT VENT GAS FIREPLACE HEATER

## MODEL SERIES

**MILLIVOLT STANDING PILOT**
**DVX36DP31(N,P)-2**
**DVX42DP31(N,P)-2**

**DIRECT IGNITION**
**DVX36DP51N-1**
**DVX42DP51N-1**

**INTERMITTENT PILOT**
**DVX36DP71(N,P)-2**
**DVX42DP71(N,P)-2**

**REMOTE RF**
**DVX36DP91(N,P)-2**
**DVX42DP91(N,P)-2**

GAS-FIRED
C UL US
LISTED

**UL FILE NO. MH30033**

NATIONAL FIREPLACE INSTITUTE
NFI
CERTIFIED
www.nficertified.org

We suggest that our gas hearth products be installed and serviced by professionals who are certified in the U.S. by the National Fireplace Institute® (NFI) as NFI Gas Specialists.

**This appliance may be installed in an aftermarket, permanently located, manufactured home (USA only) or mobile home, where not prohibited by state or local codes.**

**This appliance is only for use with the type of gas indicated on the rating plate. This appliance is not convertible for use with other gases, unless a certified kit is used.**

**WARNING: If not installed, operated and maintained in accordance with the manufacturer's instructions, this product could expose you to substances in fuel or from fuel combustion which can cause death or serious illness.**

# TABLE OF CONTENTS


| Section | Page |
|---|---|
| Important Safety Information | 3 |
| Safety Information for Users of LP Gas | 4 |
| Requirements for Massachusetts | 5 |
| Introduction | 6 |
| Specification | 7 |
| Fireplace Dimensions | 7 |
| Clearances | 8 |
| Locating Fireplace | 8 |
| Gas Supply | 9 |
| Installation | 10-13 |
| Venting Fireplace - Top | 14-17 |
| Examples - Top Vent Run | 18 |
| DVVK-4FV Direct Vent Termination Kit | 19-25 |
| DVVK-4RE Vent Kit Installation Instructions | 26-28 |
| DVVK-4F Flex Vent Instructions | 29 |
| Termination Clearances | 30 |
| Vent Clearances | 31 |
| Vent System Identification | 32 |
| Framing and Finishing | 33-34 |
| Horizontal Termination | 35 |
| DVVK-5F Flex Vent Instructions | 36 |
| Vertical Termination | 37-38 |
| Log Identification | 39 |
| Log Placement (13 Log Set) | 40-43 |
| Operating Instructions | 44-45 |
| Standing Pilot Wiring Diagram | 46 |
| Standing Pilot Lighting Instructions | 47 |
| Standing Pilot Troubleshooting | 48 |
| Direct Ignition Wiring Diagram | 49 |
| Optional Remote Control | 49 |
| Direct Ignition Lighting Instructions | 50 |
| Initial Start Up Gas Line Purge | 51 |
| Direct Ignition Troubleshooting | 51 |
| Direct Ignition Propane/LP Gas Conversion | 52-53 |
| Intermittent Pilot Operating Instructions | 54 |
| Intermittent Pilot Wiring Diagram | 54 |
| Intermittent Pilot Lighting Instructions | 55 |
| Intermittent Pilot Troubleshooting | 56-60 |
| RF Operating Instructions | 61 |
| RF Maintenance | 62 |
| RF Wiring Diagram | 63 |
| RF Lighting Instructions | 64 |
| Maintenance and Service | 65-66 |
| Parts View | 67 |
| DVX36DP(31,51,71,91) Parts List | 68-69 |
| DVX42DP(31,51,71,91) Parts List | 70-71 |
| FBB4 Variable Speed Blower Installation | 72-73 |
| Junction Box Wiring Installation Instructions | 73 |
| Accent Lamp | 74 |
| Brick Liner Installation Instructions | 74 |
| Accessories | 75 |
| Master Parts Distributor List | 76 |
| How To Order Repair Parts | 76 |
| Quick Reference Guide | 77-78 |
| Service Notes | 79 |

# IMPORTANT SAFETY INFORMATION

**Before enclosing the vent pipe assembly, operate the appliance to ensure it is venting properly.**

**DO NOT OPERATE THIS APPLIANCE WITHOUT GLASS FRONT PANEL INSTALLED**

- **If this appliance is installed directly on carpeting, tile or other combustible material other than wood flooring the appliance shall be installed on a metal or wood panel extending the full width and depth of the appliance.**

  **The base referred to above does not mean the fireproof base as used on wood stoves. The protection is for rugs that are extremely thick and light colored tile.**
- **Children and adults should be alerted to the hazards of high surface temperatures and should stay away to avoid burns or clothing ignition.**
- **Young children should be carefully supervised when they are in the same room as the appliance.**
- **Clothing or other flammable material should not be placed on or near the appliance.**
- **Adequate accessibility clearances for servicing and proper operation.**
- **This appliance must not share or be connected to a flue serving a separate solid-fuel burning appliance.**
- **Keep the area around your appliance clear of combustible materials, gasoline and other flammable vapor and liquids.**
- **Under no circumstances should any solid fuels (wood, coal, paper or cardboard etc.) be used in this appliance.**
- **The flow of combustion and ventilation air must not be obstructed in any way.**

- Due to high temperatures the appliance should be located out of traffic and away from furniture and draperies.
- The glass front or any part removed for servicing the appliance must be replaced prior to operating the appliance. Work should be done by a qualified service person.
- Keep burner and control compartment clean.
- Vent cap is hot while fireplace is in operation.
- Installation and repair should be done by a qualified service person. The appliance should be inspected before use and at least annually by a qualified service person. More frequent cleaning may be required due to excessive lint from carpeting, bedding materials, etc. It is imperative that control compartments, burners and circulating air passageways of the appliance be kept clean.
- Do not put anything around the fireplace that will obstruct the flow of ventilation air.
- Clearance in accordance with local installation codes and the requirements of the gas supplier.
- Do keep the appliance area clear and free from combustible material, gasoline and other flammable vapors and liquids.
- Do examine venting system periodically and replace damaged parts.
- Do make a periodic visual check of pilot and burners. Clean and replace damaged parts.
- CAUTION: The glass used in your fireplace is ceramic glass. If the glass is cracked or damaged in any way, it should be replaced only with a complete glass frame assembly from Empire. See parts list on Pages 68 to 71 for ordering.
- Do not use this fireplace if any part has been under water. Immediately call a qualified service technician to inspect the heater and to replace any part of the control system and any gas control which has been under water.
- Any safety screen or guard removed for servicing an appliance must be replaced prior to operating the appliance.

# SAFETY INFORMATION FOR USERS OF LP GAS

**Propane (LP-Gas) is a flammable gas which can cause fires and explosions. In its natural state, propane is odorless and colorless. You may not know all the following safety precautions which can protect both you and your family from an accident. Read them carefully now, then review them point by point with the members of your household. Someday when there may not be a minute to lose, everyone's safety will depend on knowing exactly what to do. If, after reading the following information, you feel you still need more information, please contact your gas supplier.**

## LP-GAS WARNING ODOR

**If a gas leak happens, you should be able to smell the gas because of the odorant put in the LP-Gas. That's your signal to go into immediate action!**

- Do not operate electric switches, light matches, use your phone. Do not do anything that could ignite the gas.
- Get everyone out of the building, vehicle, trailer, or area. Do that IMMEDIATELY.
- Close all gas tank or cylinder supply valves.
- LP-Gas is heavier than air and may settle in low areas such as basements. When you have reason to suspect a gas leak, keep out of basements and other low areas. Stay out until firefighters declare them to be safe.
- Use your neighbor's phone and call a trained LP-Gas service person and the fire department. Even though you may not continue to smell gas, do not turn on the gas again. Do not re-enter the building, vehicle, trailer, or area.
- **Finally**, let the service man and firefighters check for escaped gas. Have them air out the area before you return. Properly trained LP-Gas service people should repair the leak, then check and relight the gas appliance for you.

## NO ODOR DETECTED - ODOR FADE

**Some people cannot smell well. Some people cannot smell the odor of the chemical put into the gas. You must find out if you can smell the odorant in propane.** Smoking can decrease your ability to smell. Being around an odor for a time can affect your sensitivity or ability to detect that odor. Sometimes other odors in the area mask the gas odor. People may not smell the gas odor or their minds are on something else. Thinking about smelling a gas odor can make it easier to smell.

**The odorant in LP-Gas is colorless, and it can fade under some circumstances.** For example, if there is an underground leak, the movement of the gas through soil can filter the odorant. Odorants in LP-Gas also are subject to oxidation. This fading can occur if there is rust inside the storage tank or in iron gas pipes.

The odorant in escaped gas can adsorb or absorb onto or into walls, masonry and other materials and fabrics in a room. That will take some of the odorant out of the gas, reducing its odor intensity.

LP-Gas may stratify in a closed area, and the odor intensity could vary at different levels. Since it is heavier than air, there may be more odor at lower levels. Always be sensitive to the slightest gas odor. If you detect any odor, treat it as a serious leak. Immediately go into action as instructed earlier.

## SOME POINTS TO REMEMBER

- Learn to recognize the odor of LP-Gas. Your local LP-Gas Dealer can give you a "Scratch and Sniff" pamphlet. Use it to find out what the propane odor smells like. If you suspect that your LP-Gas has a weak or abnormal odor, call your LP-Gas Dealer.
- If you are not qualified, do not light pilot lights, perform service, or make adjustments to appliances on the LP-Gas system. If you are qualified, consciously think about the odor of LP-Gas prior to and while lighting pilot lights or performing service or making adjustments.
- Sometimes a basement or a closed-up house has a musty smell that can cover up the LP-Gas odor. Do not try to light pilot lights, perform service, or make adjustments in an area where the conditions are such that you may not detect the odor if there has been a leak of LP-Gas.
- Odor fade, due to oxidation by rust or adsorption on walls of new cylinders and tanks, is possible. Therefore, people should be particularly alert and careful when new tanks or cylinders are placed in service. Odor fade can occur in new tanks, or reinstalled old tanks, if they are filled and allowed to set too long before refilling. Cylinders and tanks which have been out of service for a time may develop internal rust which will cause odor fade. If such conditions are suspected to exist, a periodic sniff test of the gas is advisable. **If you have any question about the gas odor, call your LP-Gas dealer. A periodic sniff test of the LP-Gas is a good safety measure under any condition.**
- If, at any time, you do not smell the LP-Gas odorant and you think you should, assume you have a leak. Then take the same immediate action recommended above for the occasion when you do detect the odorized LP-Gas.
- If you experience a complete "gas out," (the container is under no vapor pressure), turn the tank valve off immediately. If the container valve is left on, the container may draw in some air through openings such as pilot light orifices. If this occurs, some new internal rusting could occur. If the valve is left open, then treat the container as a new tank. Always be sure your container is under vapor pressure by turning it off at the container before it goes completely empty or having it refilled before it is completely empty.

# REQUIREMENTS FOR MASSACHUSETTS

For all side wall horizontally vented gas fueled equipment installed in every dwelling, building or structure used in whole or in part for residential purposes, including those owned or operated by the Commonwealth and where the side wall exhaust vent termination is less than seven (7) feet above finished grade in the area of the venting, including but not limited to decks and porches, the following requirements shall be satisfied:

1. INSTALLATION OF CARBON MONOXIDE DETECTORS.
   At the time of installation of the side wall horizontal vented gas fueled equipment, the installing plumber or gasfitter shall observe that a hard wired carbon monoxide detector with an alarm and battery back-up is installed on the floor level where the gas equipment is to be installed. In addition, the installing plumber or gasfitter shall observe that a battery operated or hard wired carbon monoxide detector with an alarm is installed on each additional level of the dwelling, building or structure served by the side wall horizontal vented gas fueled equipment. It shall be the responsibility of the property owner to secure the services of qualified licensed professionals for the installation of hard wired carbon monoxide detectors
   a. In the event that the side wall horizontally vented gas fueled equipment is installed in a crawl space or an attic, the hard wired carbon monoxide detector with alarm and battery back-up may be installed on the next adjacent floor level.
   b. In the event that the requirements of this subdivision can not be met at the time of completion of installation, the owner shall have a period of thirty (30) days to comply with the above requirements; provided, however, that during said thirty (30) day period, a battery operated carbon monoxide detector with an alarm shall be installed.

2. APPROVED CARBON MONOXIDE DETECTORS. Each carbon monoxide detector as required in accordance with the above provisions shall comply with NFPA 720 and be ANSI/UL 2034 listed and IAS certified.

3. SIGNAGE. A metal or plastic identification plate shall be permanently mounted to the exterior of the building at a minimum height of eight (8) feet above grade directly in line with the exhaust vent terminal for the horizontally vented gas fueled heating appliance or equipment. The sign shall read, in print size no less than one-half (1/2) inch in size, **"GAS VENT DIRECTLY BELOW. KEEP CLEAR OF ALL OBSTRUCTIONS".**

4. INSPECTION. The state or local gas inspector of the side wall horizontally vented gas fueled equipment shall not approve the installation unless, upon inspection, the inspector observes carbon monoxide detectors and signage installed in accordance with the provisions of 248 CMR 5.08(2)(a) 1 through 4.
   (b) EXEMPTIONS: The following equipment is exempt from 248 CMR 5.08(2)(a)1 through 4:
      1. The equipment listed in Chapter 10 entitled "Equipment Not Required To Be Vented" in the most current edition of NFPA 54 as adopted by the Board; and
      2. Product Approved side wall horizontally vented gas fueled equipment installed in a room or structure separate from the dwelling, building or structure used in whole or in part for residential purposes.
   (d) MANUFACTURER REQUIREMENTS - GAS EQUIPMENT VENTING SYSTEM NOT PROVIDED. When the manufacturer of a Product Approved side wall horizontally vented gas fueled equipment does not provide the parts for venting the flue gases, but identifies "special venting systems", the following requirements shall be satisfied by the manufacturer:
      1. The referenced "special venting system" instructions shall be included with the appliance or equipment installation instructions; and
      2. The "special venting systems" shall be Product Approved by the Board, and the instructions for that system shall include a parts list and detailed installation instruction.
   (e) A copy of all installation instructions for all Product Approved side wall horizontally vented gas fueled equipment, all venting instructions, all parts lists for venting instructions, and/or all venting design instructions shall remain with the appliance or equipment at the completion of the installation.

# INTRODUCTION

**Instructions to Installer**

1. Installer must leave instruction manual with owner after installation.
2. Installer must have owner fill out and mail warranty card supplied with the fireplace.
3. Installer should show owner how to start and operate the fireplace.

This direct vent gas fireplace heater is designed to operate with all combustion air being siphoned from the outside of the building and all exhaust gases expelled to the outside of the building. The information contained in this manual pertains to all models and gas control systems unless otherwise noted.

**Warning: This unit is not for use with solid fuels.**

**Appliance Certification**

This fireplace is design certified in accordance with American National Standard/CSA Standard ANSI Z21.88/CSA 2.33 and by Underwriters Laboratories as a Direct Vent Gas Fireplace Heater and shall be installed according to these instructions.

Consult your local building code agency, prior to installation, to ensure compliance with local codes-including permits and inspections.

The fireplace, when installed, must be electrically grounded in accordance with local codes or, in absence of local codes, with the *National Electric Code ANSI/NFPA 70 or Canadian Electric code, CSA C22.1*, if an external electrical source is utilized.

These models may be installed in a bedroom or bed-sitting room in the U.S.A. and Canada.

**Qualified Installing Agency**

Installation and replacement of gas piping, gas utilization equipment or accessories and repair and servicing of equipment shall be performed only by a qualified agency. The term "qualified agency" means any individual, firm, corporation or company which either in person or through a representative is engaged in and is responsible for (a) the installation or replacement of gas piping or (b) the connection, installation, repair or servicing of equipment, who is experienced in such work, familiar with all precautions required and has complied with all the requirements of the authority having jurisdiction.

State of Massachusetts: The installation must be made by a licensed plumber or gas fitter in the Commonwealth of Massachusetts.

The installation must conform with local codes or, in the absence of local codes, with the N*ational Fuel Gas Code ANSI Z223.1/ NFPA 54* Natural Gas and Propane Installation Code, or CSA B149.1 in Canada.* **Available from the American National Standards Institute, Inc. 11 West 42nd St., New York, N.Y. 10036.*

Warning: ANY CHANGE TO THIS FIREPLACE OR ITS CONTROLS CAN BE DANGEROUS.
Improper installation or use of the fireplace can cause serious injury or death from fire, burns, explosions, or carbon monoxide poisoning.

**Any alteration of the original design, installed other than as shown in these instructions or use with a type of gas not shown on the rating plate is the responsibility of the person and company making the change.**

**Important**

All correspondence should refer to complete Model Number, Serial Number and type of gas.

**High Altitude**

When installing this unit at an elevation above 2000 feet (in the United States) it may be necessary to decrease the input rating by changing the existing burner orifice to a smaller size. Generally, input should be reduced 4 percent for each 1000 feet above sea level. However, if the heating value of the gas has been reduced, this general rule may not apply. Check with local gas utility for proper orifice size identification.

**Canadian High Altitude**

Altitude: 0-4500 feet (0-1370 m)

When installing this unit at an elevation above 4500 feet (in Canada), check with local authorities.

Consult your local gas utility for assistance in determining the proper orifice for location.

**Preparation**

This direct vent gas fireplace and its components are tested and safe when installed in accordance with this Installation Manual. Report to your dealer any parts damaged in shipment, specifically check glass condition. Do not install unit with damaged, incomplete, or substitute parts. Read all instructions before starting installation and follow these instructions carefully during installation to insure maximum benefit and safety. Failure to follow them will void your warranty and may present a fire hazard.

The warranty will be voided by, and the warranter disclaims any responsibility for the following actions:

- Installation of any damaged fireplace or vent system component.
- Modification of the fireplace or direct vent system.
- Installation other than as instructed by Empire Comfort Systems, Inc.
- Improper positioning of the logs, glass door or decorative rock.
- Installation and/or use of any component part not manufactured or approved by manufacturer.

# SPECIFICATIONS

| | DVX36 NAT | DVX36 LP | DVX42 NAT | DVX42 LP |
|---|---|---|---|---|
| Input Btu/hr Maximum | 35,000 | 30,000 | 37,500 | 35,000 |
| Btu/hr Minimum | 24,000 | 21,000 | 26,000 | 24,000 |
| KWH (Maximum) | 10.3 | 8.8 | 11.0 | 10.3 |
| (Minimum) | 7.2 | 6.2 | 7.6 | 7.2 |
| Orifice | #32 (P-211) | 1.65 mm (P-250) | #31 (P-209) - DVP42DP(3,7,9)<br>2.75 mm (P-305) - DVP42DP5 | #50 (P-245) - DVP42DP(3,7,9)<br>1.80 mm (P-304) - DVP42DP5 |
| Air Shutter Opening | 1/4"(6.4 mm) | FULL OPEN | 1/4" (6.4 mm) | FULL OPEN |
| Height without standoff | 34 3/4 (3.2 mm) | 34 3/4" (3.2 mm) | 34 3/4" (3.2 mm) | 34 3/4" (3.2 mm) |
| Width | 39 3/8" (1,000 mm) | 39 3/8" (1,000 mm) | 43 3/8" (1,101 mm) | 43 3/8" (1,101 mm) |
| Depth | 19 7/8" (505 mm) | 19 7/8" (505 mm) | 19 7/8" (505 mm) | 19 7/8" (505 mm) |
| Gas Inlet Shutoff Valve (Pipe) | 1/2 NPT | 1/2 NPT | 1/2 NPT | 1/2 NPT |

**NOTE:** Air shutter settings are factory minimum settings. Some venting configurations may require minor air shutter adjustments for optimum performance.

| Remote Control Options & Accessories | Description |
|---|---|
| FRBC | Millivolt Battery Remote ON/OFF |
| FRBTC | Millivolt Battery Remote Thermostat |
| TRW | Millivolt WIRELESS Wall Thermostat |
| TMV | Millivolt REED SWITCH Wall Thermostat |
| FWS-1 | Millivolt Wall Switch |
| FREC | Electric Remote |
| FBB4 | Complete Blower Assembly (IP Only) |

# FIREPLACE DIMENSIONS

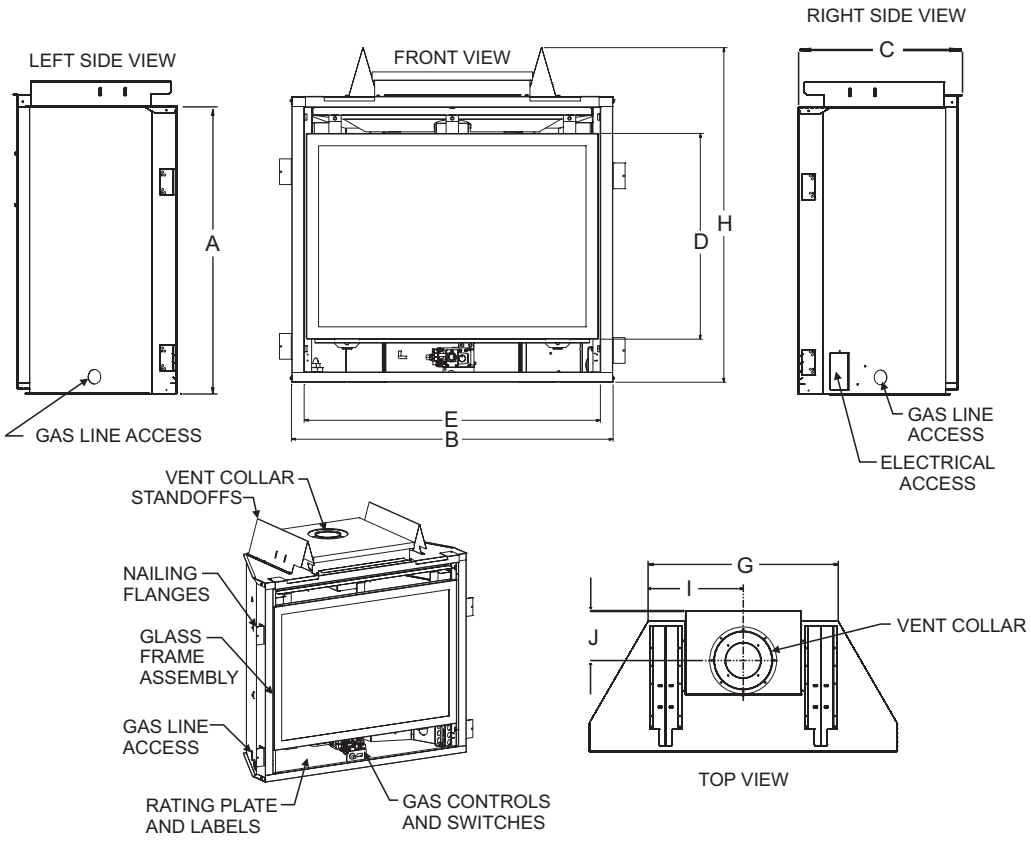


| DVX Dimensions | | |
|---|---|---|
| Dimension | DVX36FP | DVX42FP |
| A | 34 3/4"<br>882.7 mm | 34 3/4"<br>882.7 mm |
| B | 39"<br>990.6 mm | 43"<br>1092.2 mm |
| C | 19 7/8"<br>505 mm | 19 7/8"<br>505 mm |
| D | 25"<br>635 mm | 25"<br>635 mm |
| E | 36"<br>914.4 mm | 40"<br>1016 mm |
| G | 26 1/2"<br>673.1 mm | 26 1/2"<br>673.1 mm |
| H | 40 3/4"<br>1035.1 mm | 40 3/4"<br>1035.1 mm |
| I | 13 1/4"<br>336.6 mm | 13 1/4"<br>336.6 mm |
| J | 7 1/8"<br>181 mm | 7 1/8"<br>181 mm |

**Figure 1**

# CLEARANCES

| Clearance to Combustibles | |
|---|---|
| Back | 0" (0 mm) |
| Side | 0" (0 mm) |
| Floor | 0" (0 mm) |
| Top Stand-off | 0" (0 mm) |
| Top Framing Edge | 6" (152 mm) |

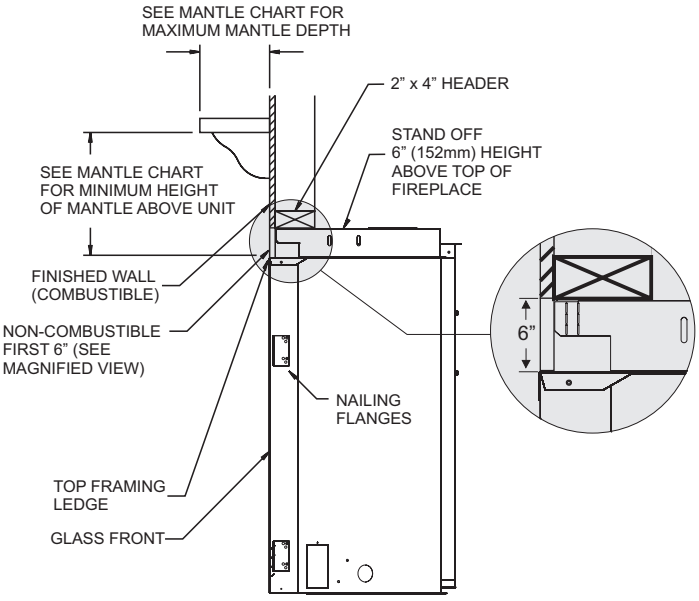


**Figure 2**

**Combustible Material**

No greeting cards, stockings or ornamentation of any type should be placed on or attached to the fireplace. The flow of heat can ignite combustibles.

**Mantel Chart (Figure 3)**

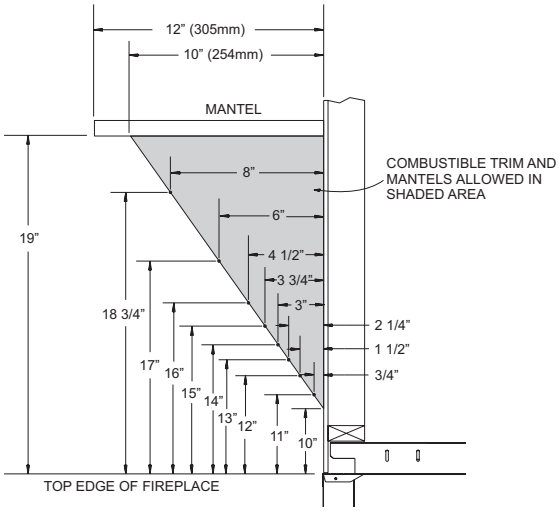


**Figure 3**

**Clearances (Figure 4)**

Clearance from top front edge of fireplace to ceiling is 36"
Clearance from side of fireplace to adjacent sidewall is 6".

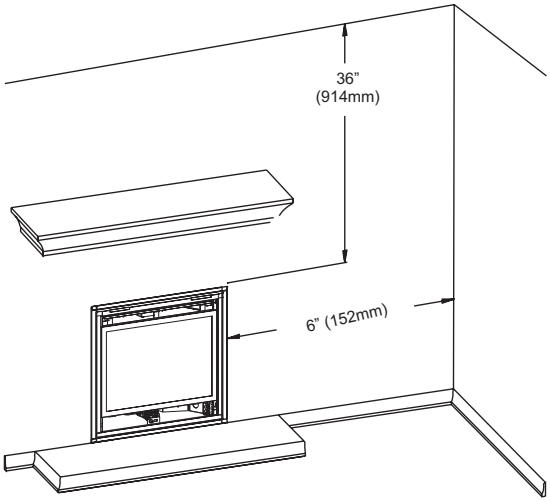


**Figure 4**

# LOCATING FIREPLACE

**Note:** Island (C) and Room Divider (F) installation is possible as long as the horizontal portion of the vent system (H) does not exceed 20 feet with a minimum vertical run of 8 feet. See details in Venting Section.

When you install your Direct Vent Fireplace in (F) Room divider or (A) Flat on wall corner positions, a minimum of 6 inches clearance must be maintained from the perpendicular wall and the front edge of the appliance.

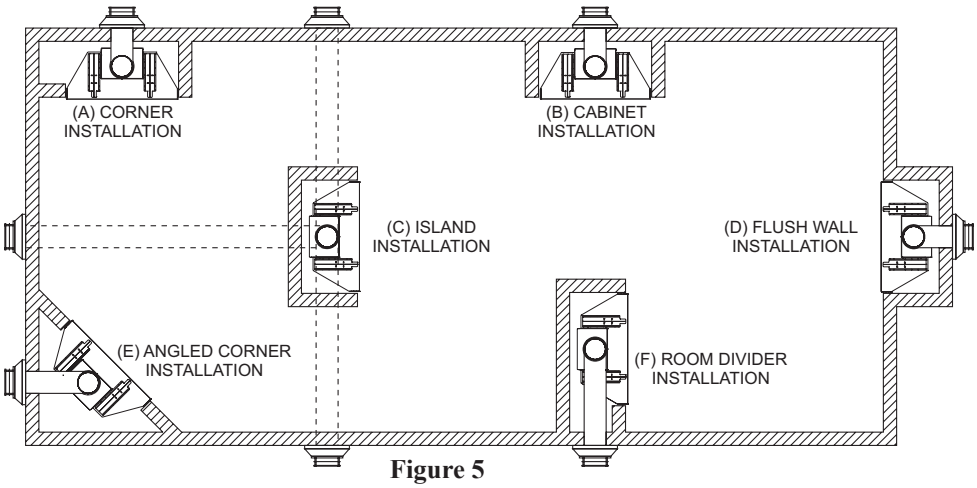


**Figure 5**

# GAS SUPPLY

The gas pipeline can be brought in through the right or left side of the appliance. Consult the current National Fuel Gas Code, ANSI Z223.1 CAN/CGA-B149 (.1 or .2) installation code.

| Recommended Gas Pipe Diameter | | | | |
|---|---|---|---|---|
| **Pipe Length** | **Schedule 40 Pipe Inside Diameter** | | **Tubing, Type L Outside Diameter** | |
| | Nat. | L.P. | Nat. | L.P. |
| 0-10ft<br>0-3m | 1/2"<br>12.7 mm | 3/8"<br>9.5 mm | 1/2"<br>12.7 mm | 3/8"<br>9.5 mm |
| 11-40ft<br>4-12m | 1/2"<br>12.7 mm | 1/2"<br>12.7 mm | 5/8"<br>15.9 mm | 1/2"<br>12.7 mm |
| 41-100ft<br>13-30m | 1/2"<br>12.7 mm | 1/2"<br>12.7 mm | 3/4"<br>19 mm | 1/2"<br>12.7 mm |
| 101-150ft<br>31-46m | 3/4"<br>19 mm | 1/2"<br>12.7 mm | 7/8"<br>22.2 mm | 3/4"<br>1.9 mm |

**Note:** Never use plastic pipe. Check to confirm whether your local codes allow copper tubing or galvanized.
**Note:** Since some municipalities have additional local codes, it is always best to consult your local authority and installation code.

The use of the following gas connectors is recommended:

— ANS Z21.24 Appliance Connectors of Corrugated Metal Tubing and Fittings.

— ANS Z21.45 Assembled Flexible Appliance Connectors of Other Than All-Metal Construction

The above connectors may be used if acceptable by the authority having jurisdiction. The state of Massachusetts requires that a flexible appliance connector cannot exceed three feet in length.

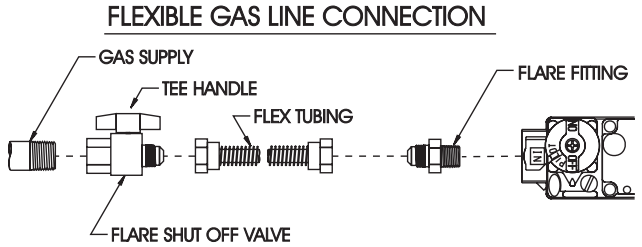


**Figure 6**

| | Gas Supply Pressure (inches w.c.) | | |
|---|---|---|---|
| | Minimum | Normal | Maximum |
| Natural Gas | 4.5" | 7.0" | *14.0" |
| LP (Propane) | 10.8" | 11.0" | 14.0" |
| | Manifold Pressure (inches w.c.) | | |
| | Normal (HI) | | |
| Natural Gas | 3.5" | | |
| LP (Propane) | 10.0" | | |

***NOTE: Remote "RF" Models - 10.5" w.c. maximum**

**Installing a New Main Gas Cock**

Each appliance should have its own manual gas cock.

A manual main gas cock should be located in the vicinity of the unit. Where none exists, or where its size or location is not adequate, contact your local authorized installer for installation or relocation.

Compounds used on threaded joints of gas piping shall be resistant to the action of liquefied petroleum gases. The gas lines must be checked for leaks by the installer. This should be done with a soap solution watching for bubbles on all exposed connections, and if unexposed, a pressure test should be made.

**Never use an exposed flame to check for leaks. Appliance must be disconnected from piping at inlet of control valve and pipe capped or plugged for pressure test. Never pressure test with appliance connected; control valve will sustain damage!**

**NOTE:** The millivolt gas controls are equipped with a captured screw type pressure test point, therefore it is not necessary to provide a 1/8" test point up stream of the control.

When using copper or flex connector use only approved fittings.

The appliance and it's individual shut off valve must be disconnected from supply piping system during any pressure testing of that system at test pressures in excess of 1/2 psig (3.5kPa).

The appliance must be isolated from the gas supply piping system by closing its individual manual shut off valve during any pressure testing of the gas supply piping system at test pressures equal to or less than 1/2 psig (3.5kPa).

**Attention!** If one of the procedures results in pressures in excess of 1/2 psig (14" w.c.) (3.5 kPa) on the fireplace gas valve, it will result in a hazardous condition.

**Checking Manifold Pressures**

Both Propane and Natural gas valves have a built-in pressure regulator in the gas valve. Natural gas models will have a manifold pressure of approximately 3.5" w.c. (.871kPa) at the valve outlet with the inlet pressure to the valve from a minimum of 4.5" w.c. (1.120kPa) for the purpose of input adjustment to a maximum of 14.0" w.c. (3.484kPa). Propane gas models will have a manifold pressure approximately 10.0" w.c. (2.49kPa) at the valve outlet with the inlet pressure to the valve from a minimum of 10.8" w.c. (2.68kPa) for the purpose of input adjustment to a maximum of 14.0" w.c. (3.484kPa).

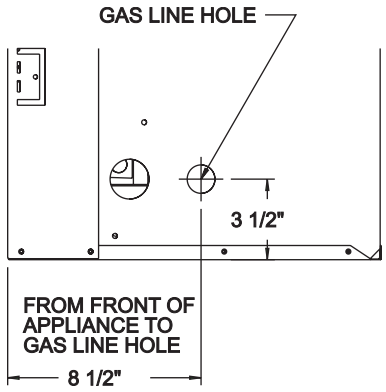


**Figure 7**

**Framing and Finishing**

1. Choose unit location.
2. Frame in fireplace with a header across the top. It is important to allow for finished face when setting the depth of the frame.
3. Attach fireplace to frame using adjustable nailing flange. Preset depth to suit facing material (adjustable to 3/8", 1/2" or 3/4" depths). Note: Fireplace must mount flush to facing material. If facing material requires more depth than 3/4" mark and drill two (2) 1/8" holes into fireplace side at appropriate depth. See **Figure 10.**
4. Use (8) 1/2" hex-head screws supplied in hardware package, to screw through slotted holes in drywall strip and then screw into pre-drilled holes on fireplace side. Measure from face of fireplace to face of drywall strip to determine final depth.

**Vent Pipe Clearance**

**Note:** Maintain one inch (1") of clearance around vertical vent pipe. **See Figure 9A.** For horizontal vent, maintain a minimum 1" clearance to the bottom and sides of the vent, and 3" clearance to combustibles above the vent pipe. **See Figure 9B.**

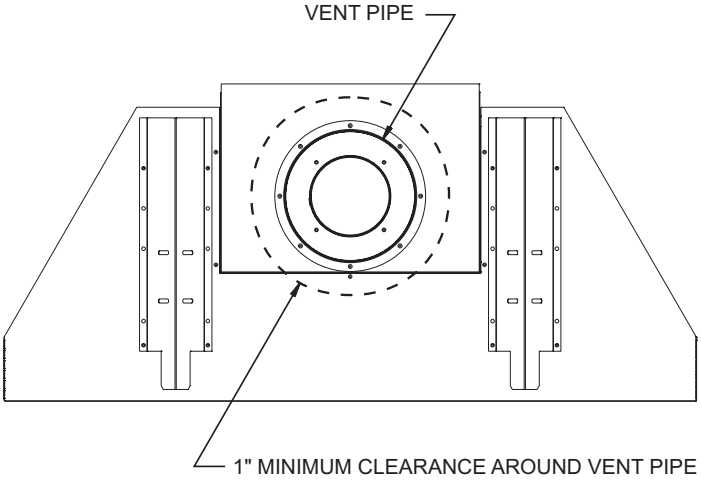


**Figure 9A**

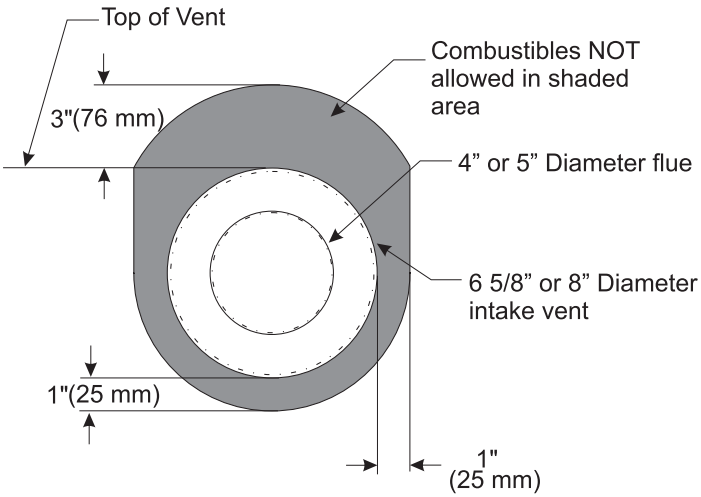


**Figure 9B**

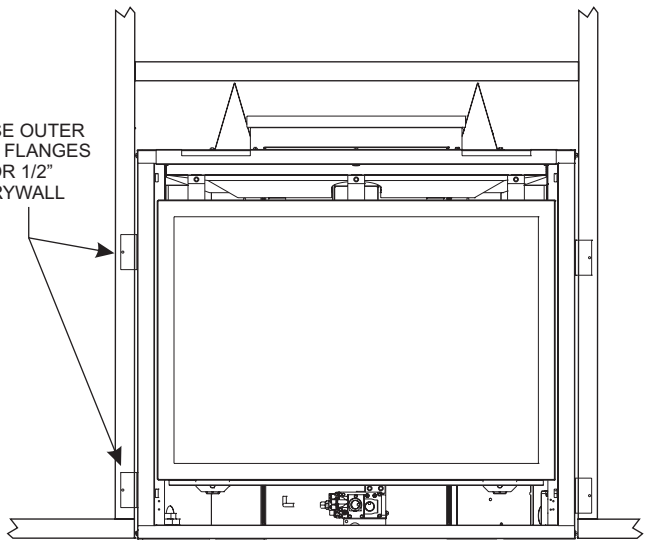


**Figure 8A**

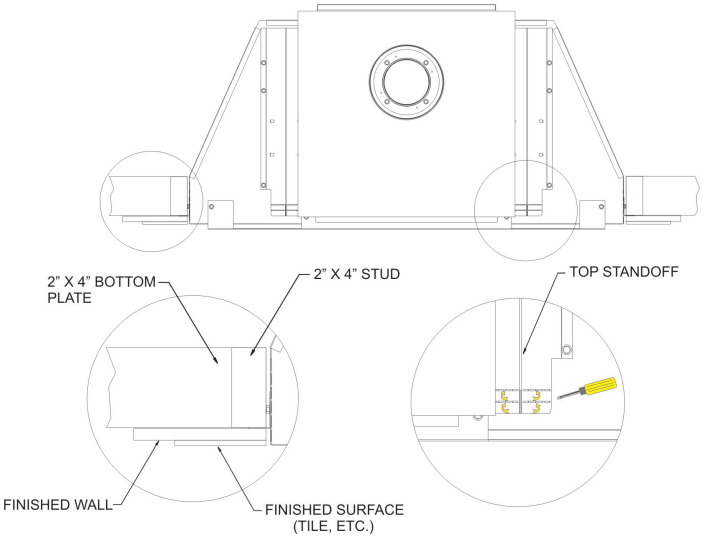


**Figure 8B**

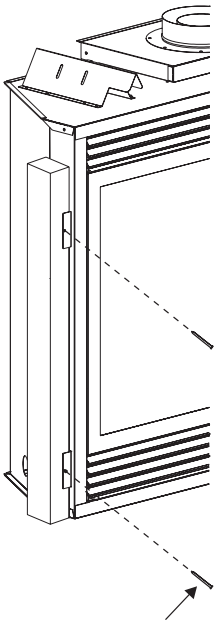


**Figure 10**

**Framing (Figure 11)**

Fireplace framing can be built before or after the fireplace is set in place. Framing should be positioned to accommodate wall covering and fireplace facing material. The fireplace framing should be constructed of 2 x 4 lumber or heavier. The framing headers may rest on the fireplace standoffs. Refer to **Figure 11** for minimum framing dimensions.

**CAUTION: MEASURE FIREPLACE DIMENSIONS AND VERIFY FRAMING METHODS, AND WALL COVERING DETAILS BEFORE FRAMING CONSTRUCTION BEGINS.**

**Framing dimension "A" includes a six inch clearance for standoffs on fireplace. After installing fireplace into framing, the finished non-combustible wall surface must cover the six inch opening above the fireplace.**

Attention: Appliance must not be recessed below any flooring, including carpeting, for proper front mounting. A metal or wood panel extending the full width and depth of the appliance may be required to raise the unit to the same level, or above existing flooring. The vertical dimension in **Figure 11** must be adjusted when a panel is placed beneath the appliance.

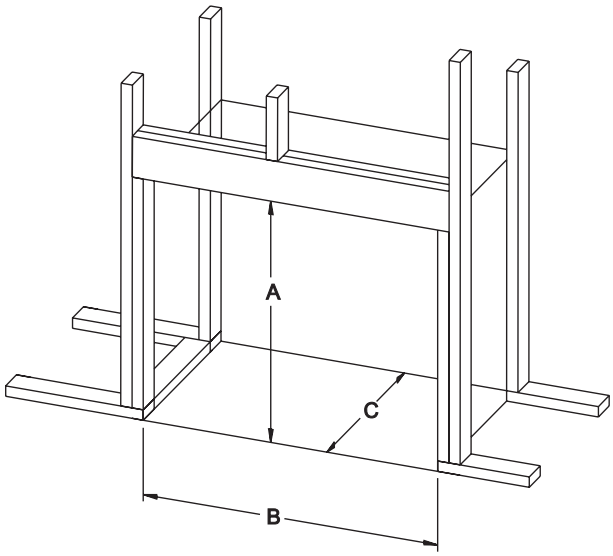


| | DVX36 | DVX42 |
|---|---|---|
| "A" | 40 7/8" | 40 7/8" |
| "B" | 40 3/8" | 43 3/8" |
| "C" | 19 7/8" | 19 7/8" |

**Figure 11**

**Attention:** If a base is not used and the appliance is installed directly on tile or other combustible material other than wood flooring, it shall be installed on a metal or wood panel extending the full width and depth of the appliance. The vertical dimension in **Figure 11** must be adjusted when a metal or wood panel is placed beneath the appliance.

**Finishing (Figures 12 and 13)**

Finish the walls with the material of your choice. **Figure 3** on page 8 shows the minimum vertical and corresponding maximum horizontal dimensions of mantels or other combustible projections above the top front edge of the fireplace.

**The black fireplace front must not be covered. It must be flush to the finished wall.**

**Warning:** When finishing the fireplace never obstruct or modify the air inlet/outlet louvers in any manner. Provide adequate clearances around air openings into the combustion chamber.

**Caution:** If the joints between the finished wall and the fireplace surround (top and sides) are sealed, a 300°F minimum sealant material must be used. These joints are not required to be sealed. Only non-combustible material (using 300°F minimum adhesive if needed), can be applied as facing to the fireplace.

**Flush Wall Installation**

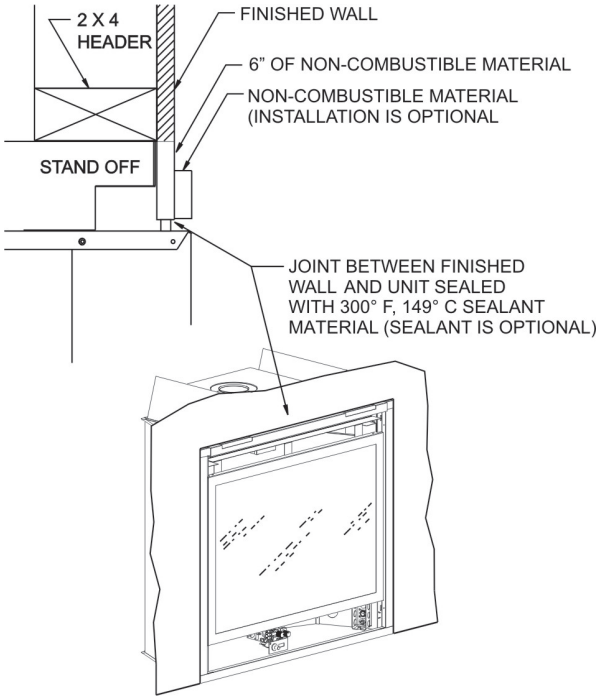


**Figure 12**

**Combustible Surround Installation**

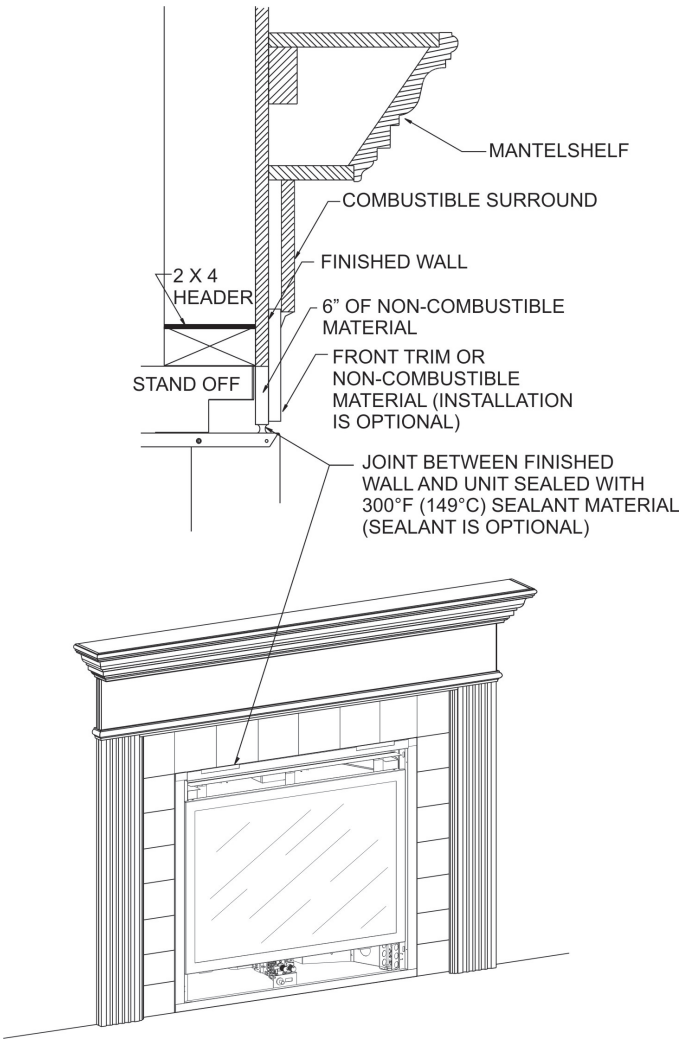


**Figure 13**

**Attention: Cold climate installation recommendation: When installing this unit against a non-insulated exterior wall, it is recommended that the outer walls be insulated to conform to applicable insulation codes.**

**Vent Runs (Figures 14, 15, and 16)**

In planning the installation for the fireplace, it is necessary to install certain components before the appliance is completely positioned and installed. These include the direct vent system, gas piping for the appliance and the electrical wiring.

The appliance can be mounted on any of the following surfaces:

1. A flat, hard combustible (burnable) surface.
2. A raised wooden platform.
3. Four (4) corner supports. (Example: Four (4) concrete masonry blocks.) These supports must be positioned so they contact all four (4) perimeter edges on the bottom of the unit.

**VERTICAL, 90° ELBOW WITH HORIZONTAL TERMINATION**

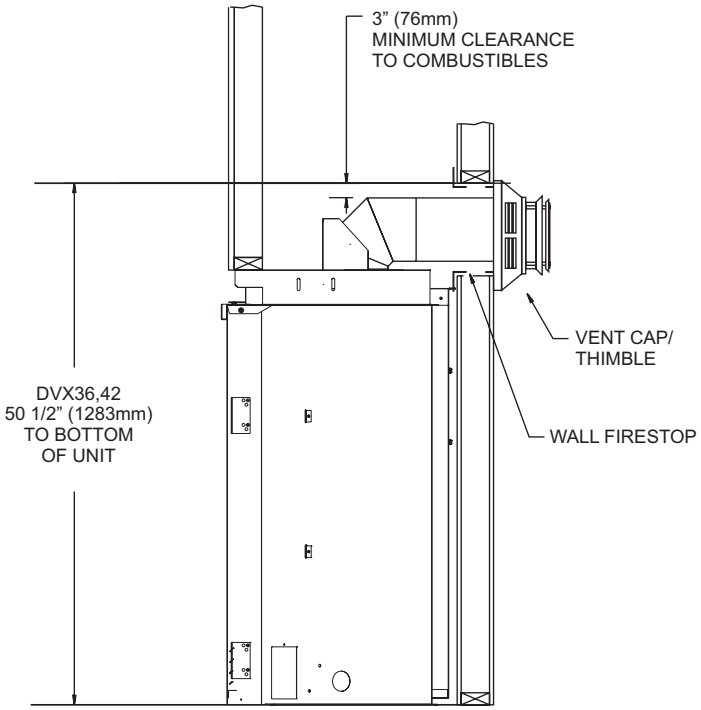


**Figure 14**

### VERTICAL, 90° ELBOW TO HORIZONTAL OUT THE WALL

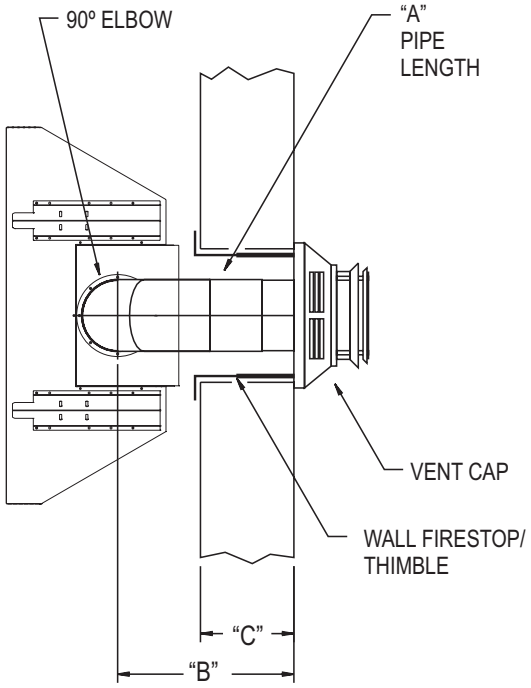


| "A" | "B" | "C" |
|---|---|---|
| 6"(152 mm) | 11 1/4"(286 mm) to 12 3/4"(324 mm) | 4 3/4"(121 mm) to 6 1/4"(159 mm) |
| 9"(229 mm) | 14 1/4"(362 mm) to 15 3/4"(400 mm) | 7 3/4"(197 mm) to 9 1/4"(235 mm) |
| 12"(305 mm) | 17 1/4"(438 mm) to 18 3/4"(476 mm) | 10 3/4"(273 mm) to 12 1/4"(311 mm) |

**Figure 15**

### CORNER INSTALLATION VERTICAL, 90° ELBOW TO HORIZONTAL OUT THE WALL

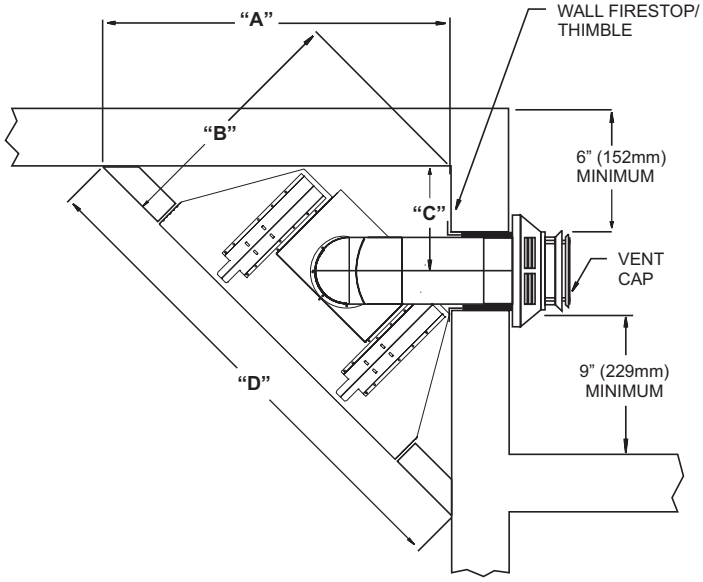


| Dim. | DVX36 | DVX42 |
|---|---|---|
| A | 45 3/8" (1152 mm) | 49 5/8" (1260 mm) |
| B | 32 1/8" (816 mm) | 35 1/8" (892 mm) |
| C | 13 3/8" (34 mm) | 15 1/2" (39 mm) |
| D | 64 1/8" (1628 mm) | 70 1/8" (1781 mm) |

**Figure 16**

# VENTING FIREPLACE - TOP

**To Use the Vent Graph (Figure 17)**

1. Determine the height of the center of the horizontal vent pipe. Using this dimension on the Sidewall Vent Graph, locate the point it intersects with the slanted graph line.
2. From the point of this intersection, draw a vertical line to the bottom of the graph.
3. Select the indicated dimension, and position the unit in accordance with same.

**EXAMPLE A:**
If the vertical dimension from the floor of the unit is 35 feet, the horizontal run to the outer wall flange must not exceed 6.5 feet.

**EXAMPLE B:**
If the vertical dimension from the floor of the unit is 6.5 feet, the horizontal run to the outer wall flange must not exceed 14.5 feet.

**Special Note:** For each 45 degree elbow installed in the horizontal run, the length of the horizontal run MUST be reduced by 18" (45cm). This does not apply if the 45 degree elbows are installed on the vertical part of the vent system. Reduce 3' for every 90° elbow.

**Example:** According to the chart the maximum horizontal vent length is 20' and if two 45 degree elbows are required in the horizontal vent it must be reduced to 17'.

The maximum number of 45 degree elbows permitted per side wall installation is two (2). These elbows can be installed in either the vertical or horizontal run.

**Note:** On vertical venting the first elbow does not get counted.

**Note:** Flue heat shield must be installed for venting applications with less than two feet of vertical pipe off the top of the fireplace.

## Venting Graph (Dimensions in Feet)

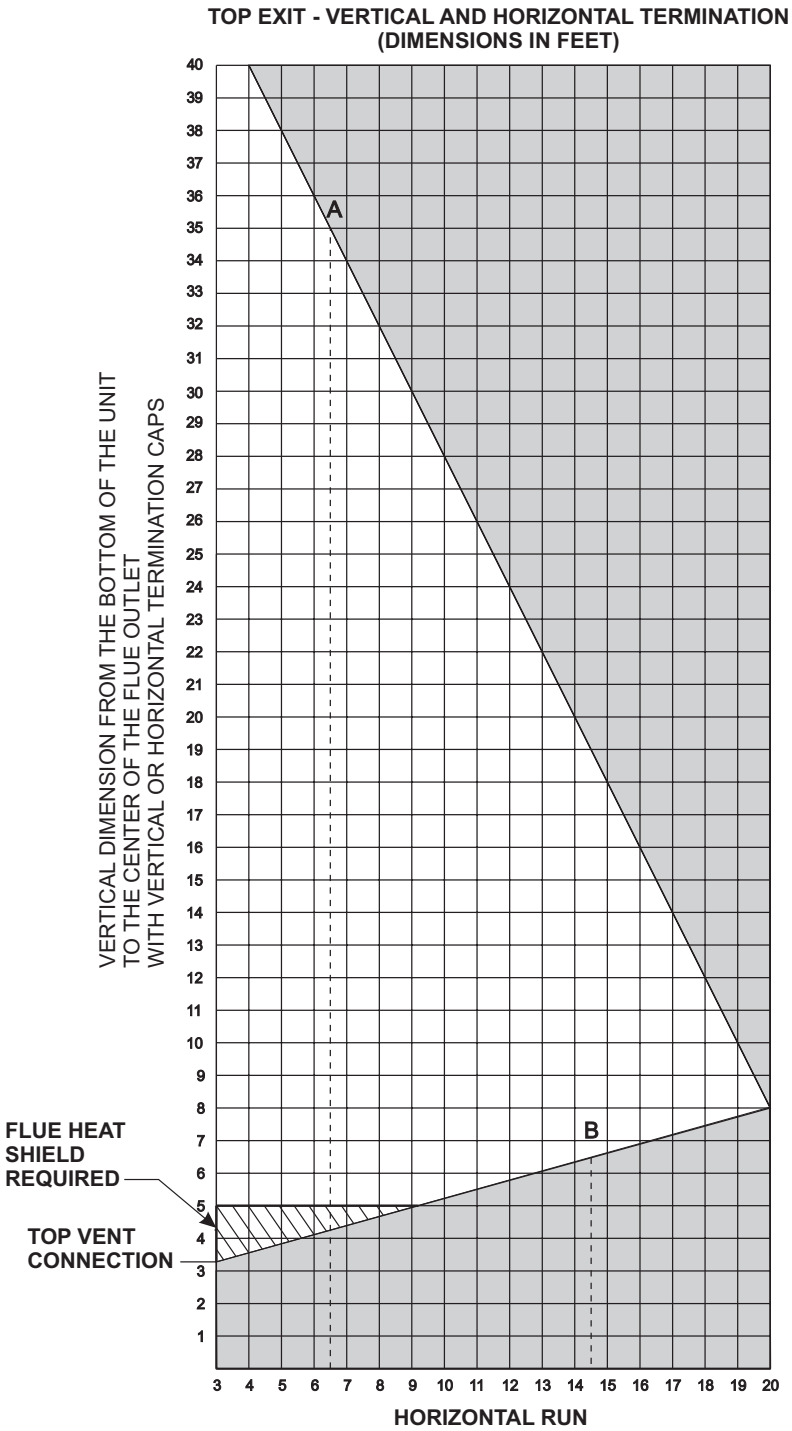


**Figure 17**

Acceptable vertical and horizontal vent run.
(40' maximum vertical and 20' maximum horizontal)

Unacceptable vertical and horizontal vent run.

**Installation of Flue Heat Shield**

1. Remove flue insulation.
2. Remove (2) screws on outside of inlet vent adapter. **See Figure 18.**
3. Lift top shield placing flue heat shield around flue.
4. Replace (2) screws on outside of inlet vent adapter. **See Figure 19.**
5. Bend tab at top front of flue heat shield if necessary to maintain air gap between flue pipe and flue heat shield.
6. Replace flue insulation.

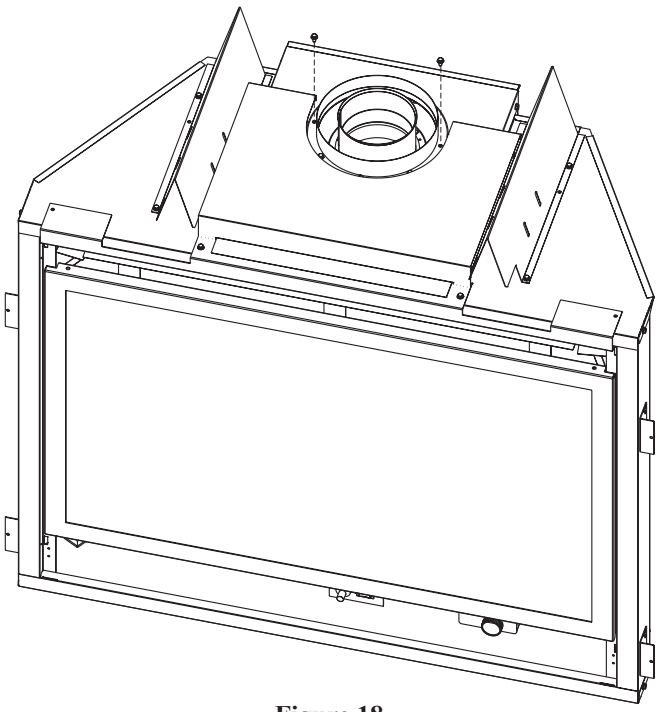

**Figure 18**

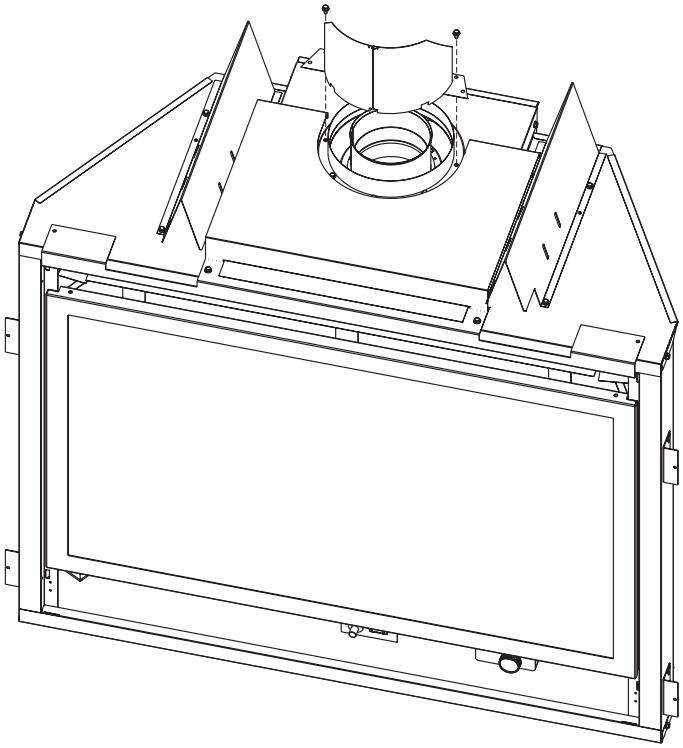


NOTE: 42” MODEL SHOWN

**Figure 19**

**Below Grade Installation**

When it is not possible to meet the required vent terminal clearances of 12" (305mm) above grade level, a snorkel kit is recommended. It allows installation depth down to 7" (178 mm) below grade level. The 7" (178 mm) is measured from the center of the horizontal vent pipe as it penetrates through the wall.

**Ensure the sidewall venting clearances are observed. If venting system is installed below ground, we recommend a window well with adequate and proper drainage to be installed around the termination area.**

**TYPICAL BASEMENT INSTALLATION**

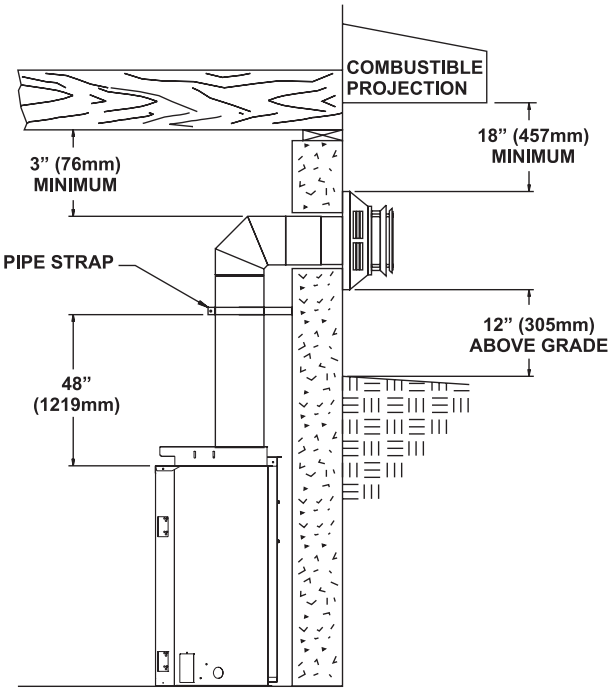


**Figure 20**

Examples of possible venting systems using one (1) 90° elbow. Eight (8) feet is listed as minimum vertical vent run with 20 feet of maximum horizontal vent run. Vertical dimensions are based on centerline to centerline of pipe. Horizontal dimensions are based on centerline of pipe to end of termination.

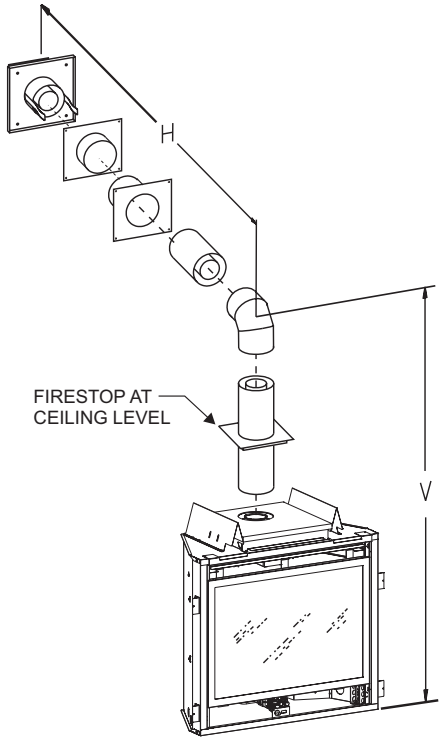


SEE GRAPH FOR PERMISSIBLE "H" AND "V" DIMENSIONS

**Figure 21**

Examples of possible venting systems using two (2) 90° elbows. V is listed as minimum vertical dimensions and H1 + H2 is listed as total of maximum horizontal dimensions. The maximum vertical and horizontal distances for two (2) 90° elbows as shown in **Figure 22** is 22 feet.

Attention: Refer to **Figure 17** for additional venting requirements.

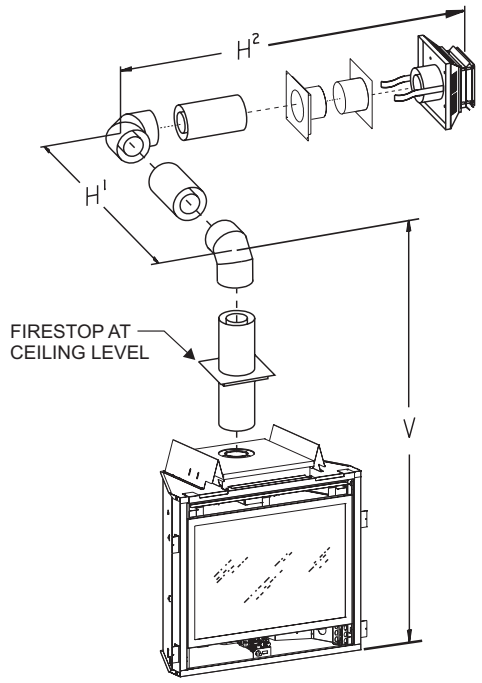


SEE GRAPH FOR PERMISSIBLE "H" AND "V" DIMENSIONS
NOTE: H1 AND H2 MUST BE ADDED TOGETHER TO USE CHART

**Figure 22**

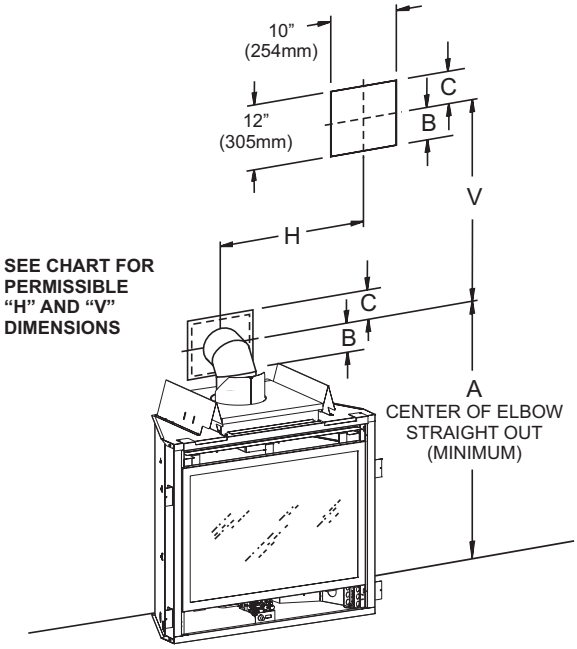


**Figure 23**

**MINIMUM HOLE LOCATION DIMENSIONS FOR THROUGH THE WALL HORIZONTAL INSTALLATIONS WITH 90 DEGREE ELBOW OFF TOP OF FIREPLACE**

| FIREPLACE SERIES | HARD ELBOW DIMENSIONS | | |
|---|---|---|---|
| | "A" | "B" | "C" |
| DVX36FP | 43-1/2" (1105 mm) | 5" (127 mm) | 7" (178 mm) |
| DVX42FP | 43-1/2" (1105 mm) | 5" (127 mm) | 7" (178 mm) |

| FIREPLACE SERIES | FLEX PIPE 90 DEGREE BEND | | |
|---|---|---|---|
| | "A" | "B" | "C" |
| DVX36FP | 46" (1143 mm) | 5" (127 mm) | 7" (178 mm) |
| DVX42FP | 46" (1143 mm) | 5" (127 mm) | 7" (178 mm) |

**Positioning the Fireplace**

Determine the exact position of the appliance so the direct vent termination will be centered (if possible) between two (2) studs. This will avoid any extra framing. All vent kit pipes should be assembled on the unit after the unit is moved into the final position.

**Cutting the Hole (Figure 23)**

After the fireplace has been positioned in its permanent location, the hole through the exterior wall of the house can be cut. This hole must be 12" (305 mm) high x 10" (254 mm) wide with its center line determined by the amount of vertical rise and horizontal run of the termination. **See Figure 23.** When locating the hole it must be noted that the bottom of the cap must be 12" (305 mm) above the ground level, and top of the cap must be no less than 18" (457 mm) below a combustible projection, and no closer than 9" (229 mm) to any wall running parallel to vent termination. **See Figure 24.**

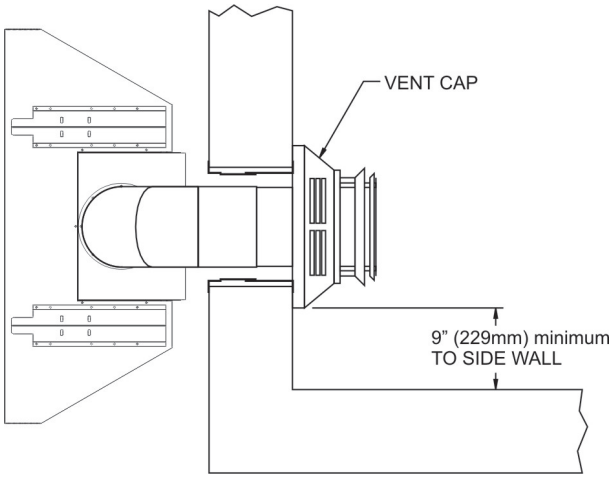


**Figure 24**

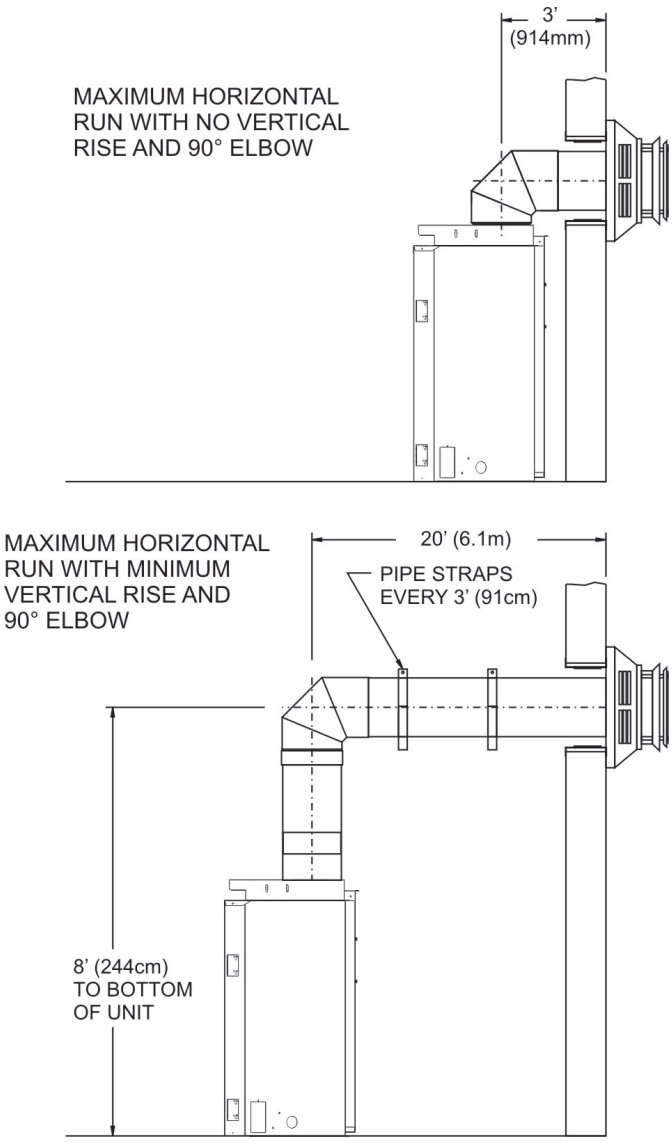


**Figure 25**

# EXAMPLES - TOP VENT RUN

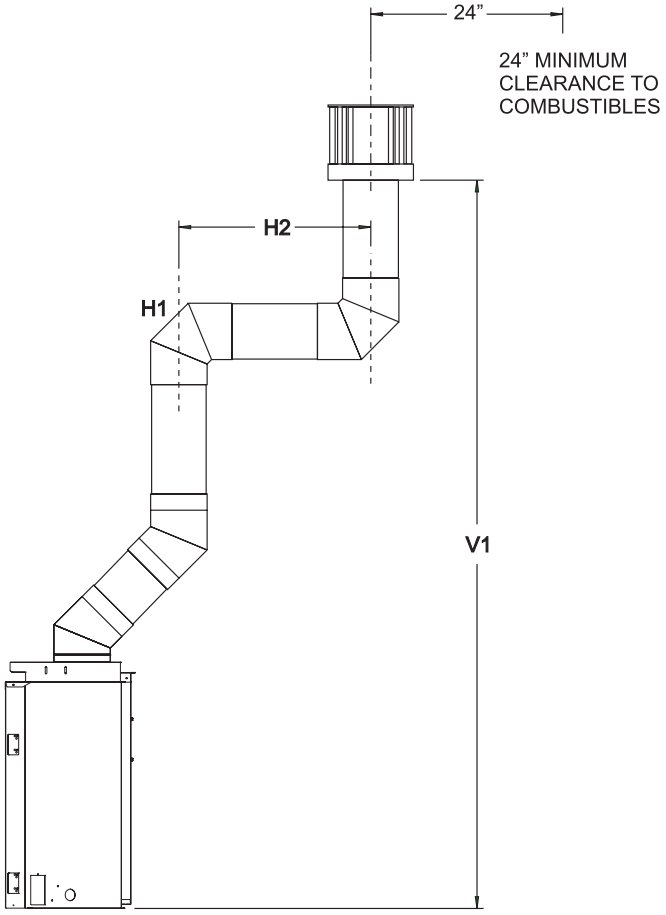


Example
H2 = 2ft
2 - (90° + 90°) = 6ft
V1 = 21ft

H = 8ft V = 15ft

**Figure 26**

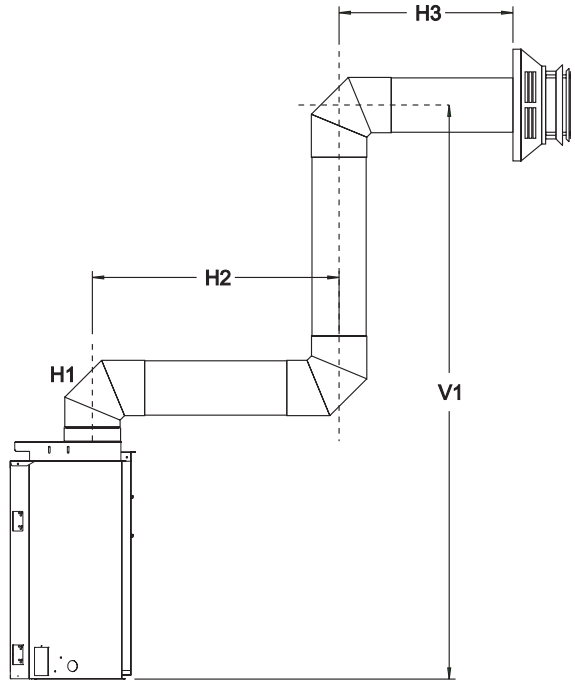


**Example**
**H2 3ft, H3 1ft = 4ft**
**(90° + 90° + 90°) = 6ft**
**V1 = 21ft**

**H = 10ft V = 21ft**

**Figure 27**

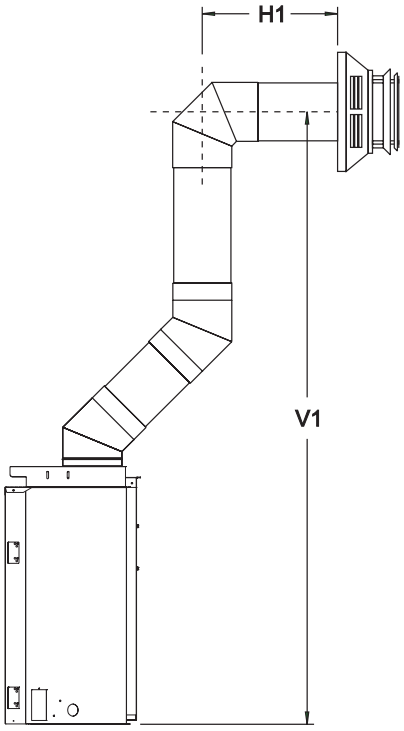


Example
H1 = 2ft
V1 = 20ft

H = 2ft V = 20ft

**Figure 28**

# DVVK-4FV DIRECT VENT TERMINATION KIT

## Installation Instructions

This termination kit can only be used with Empire Comfort Systems direct vent fireplaces listed for use with DVVK-4FV Vertical Flex Vent Kit. Please review the instructions packaged with your fireplace and verify the fireplace model number. Check that this flex vent system is listed for use with your fireplace model prior to starting the installation.

**This vent kit may be installed as an OEM installation in a manufactured home (USA only) or mobile home and must be installed in accordance with the manufacturer's instructions and the manufactured home construction and safety standard, Title 24 CFR, Part 3280 or Standard for Installation in Mobile Homes, CAN/CSA Z240 MH.**

**CAUTION**

All Fireplaces listed for use with the DVVK-4FV will operate safely when installed in accordance with this instruction manual. Read all instructions before starting installation, then follow these instructions carefully to maximize fireplace performance and safety. Report damaged parts to your dealer.

**WARNING**

Any common venting of the gas appliance using the DV vent kit with other gas appliances is not allowed. Do not connect this appliance to a chimney flue servicing a separate solid fuel-burning appliance.

**WARNING**

**Failure to follow these instructions may create a possible fire hazard and will void the warranty.**

**WARNING**

Always maintain minimum clearances around vent systems. The minimum clearance to combustibles for horizontal runs of vent pipe is 3 inches from the top, and 1 inch from the sides and bottom of the vent system. Do not pack the open air spaces around the fireplace or flue with insulation or other materials. Any horizontal run must have a 1/4" rise for every one (1) foot of run towards the vent termination. The vent above the roof must terminate vertically.

**WARNING**

**Contact your Local Building and Fire Officials about restrictions and installation inspections in your area.**

## IMPORTANT SAFETY INFORMATION

- The vertical termination cap MUST be vented directly to the outside. The termination kit MUST NEVER be connected to a chimney flue(s) servicing a separate solid-fuel burning appliance or any other appliances.
- Vertical termination cap MUST NOT be mounted horizontally.
- The flexible vent pipe cannot be intermingled with any of the rigid vent pipe section(s). DO NOT connect two sections of flexible vent pipe together to achieve a longer length without the use of approved connectors.
- The installation must conform with local codes or in the absence of local codes, with the National Fuel Gas Code, ANSI Z223.1 (in the United States) or with the current installation code CAN/CGA B149 (in Canada).
- Only Direct Vent fireplaces approved for use with Empire Comfort Systems, Inc. DVVK-4FV termination kit shall be used. See PARTS LIST/ILLUSTRATIONS section for vent component identification.
- Horizontal vent runs must be supported every 2 feet using wall straps. Vertical runs must be supported every 3 feet using wall straps. Slip wall straps loosely on to pipe. Attach installer provided straps to framing members using nails or screws.
- The fireplace and venting system should be inspected before initial use and at least annually by a qualified field service person. Inspect the external vent cap on a regular basis to make sure that no debris is interfering with the airflow. Inspect entire venting system to ensure proper function.
- Please refer to the fireplace instructions for information on Termination Cap clearances.

## PRE-INSTALLATION INFORMATION:

**Items Required For Installation:**

| Tools | Building Supplies |
|---|---|
| Phillips Screwdriver<br>Hammer<br>Saw and/or saber saw<br>Level<br>Measuring Tape<br>Electric Drill and Bits<br>Pliers<br>Square<br>Tin Snips | Framing Materials<br>Wall Finishing Materials<br>Caulking Material (Noncombustible)<br>Support Strap supplies |

**Before You Start:**
Plan your installation. Read these instructions and the fireplace installation manual before installing unit and vent system. Set unit in place and survey how best to vent the unit. After the vent configuration has been decided, stretch the flex pipe components out, then trim off what will not be needed.

Refer to the fireplace installation manual for information on vertical venting requirements. The maximum length of vent when using flex venting is 35 feet total. Contact your dealer or distributor for information on flex vent extension kits that may be added to the DVVK-4FV kit, in order to terminate up to 35 feet. Available extension kits include the DVEK-10 (10' Flex) or the DVEK-25 (25' Flex) extension kits. The extension kits include connection hardware.

**Installation of the Vertical Flex Termination Kit**

**WARNING**
Ensure that the venting system exits the structure through the roof and does not terminate less than 12 inches (305 mm) above the roof.

**WARNING**
Refer to your fireplace homeowner's manual for the minimum and maximum venting requirement of your fireplace prior to installation. Failure to do so may cause a fire hazard.

**WARNING**
This flexible pipe termination kit is ONLY for vertical terminations.

**WARNING**
Any horizontal run section must have a 1/4" rise for every one (1) foot of run towards the vent termination. Never allow the vent pipe to run downward. This could cause high temperatures and may present a fire hazard. This vertical kit may incorporate two (2) 90 degree bends, but must terminate vertically.

**CAUTION**
This flex vent kit can only be installed vertically off of the unit and must terminate vertically.

**WARNING**
Because of sharp edges, always use gloves when handling the flex vent components.

**CAUTION**
Vent connections should overlap a minimum of 1" for proper sealing.

**CAUTION**
Always stretch and secure venting with metal strapping secured with nails (nails and strapping not supplied) to ensure that the flex vent runs remain true.

## Step-By-Step Installation For Flex DV Kit

1. Unpack vent components and check all items for shipping damage.
2. For this venting system to operate as designed it is dependent on the use of all parts and procedures detailed in these instructions. Failure to follow these instructions may potentially affect the performance of this vent system and the attached appliance.
3. As per the fireplace manufacturer's instructions, replace the existing 6 5/8" diameter fireplace vent adapter with the 7" diameter flex vent fireplace adapter included in the vent kit. Install the adapter collar with the screws removed from the standard fireplace collar. Refer to the fireplace manual for additional information on the vent collar removal and installation.
4. Once the fireplace location has been determined, mark the ceiling where the flex vent will pass through. Cut an opening for installation of the firestop thimble assembly. The opening must measure a minimum of 9-1/2" x 9-1/2" square. **See Figure 29.**
5. Next, determine the location for the cutout in the roof opening. This opening must be large enough to provide a minimum 1" air space clearance from the vertical vent pipe to any combustible framing.
6. Install the Firestop/Thimble assembly to the framed opening in the ceiling using common nails or screws.
   **Note:** The thimble assembly is adjustable up or down as needed within the firestop. It is also designed with a pivoting firestop for use with 0 - 3/12 pitch cathedral ceilings.
7. To begin vent system assembly, first layout all the vent components on the floor in the order in which they will be assembled.
8. Stretch the 4" diameter inner flex flue and 7" diameter outer flex vent to the maximum length of 6 feet.
9. Install the spring spacers provided around the 4" diameter flex flue at 1 foot intervals, then slide the flue pipe with spacers into the 7" diameter outer flex vent pipe. Make sure the springs are spaced evenly starting at 12 inches from the fireplace collar. **See Figure 30.**

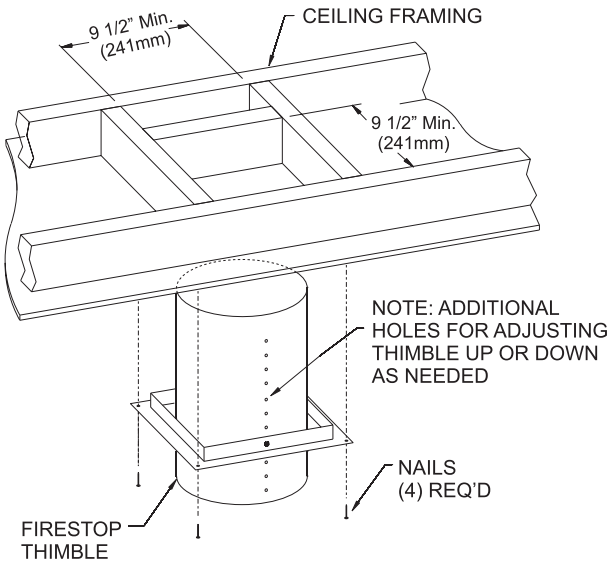


**Figure 29**

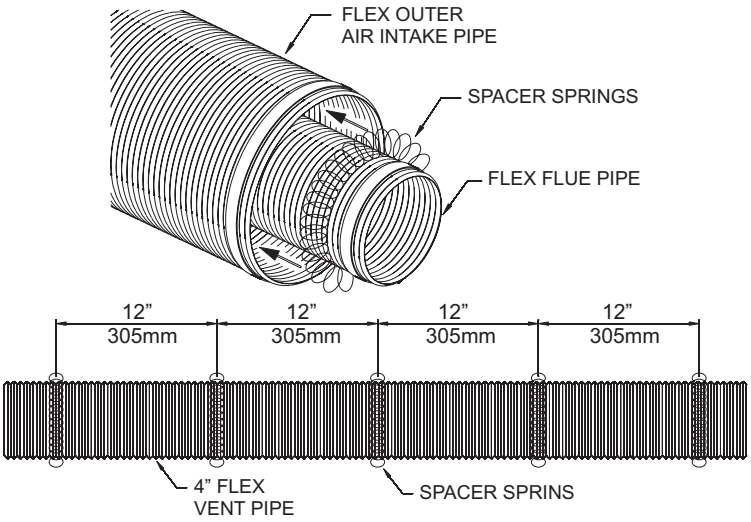


**Figure 30**

10. With the flex vent assembly and the 48” long hard pipe components laid out on the floor, begin securing these parts together. First, apply a generous bead of silicone sealant to the inside of the 4” diameter flex flue (not the end with the pre-installed connector), then slide the flex flue over the 4” diameter hard pipe flue. Be sure to overlap at least 1-1/4”. Secure this connection with a 4” diameter band clamp provided. Be careful not to damage or tear the flex flue when tightening clamp.
11. Repeat the connection process for the outer 7” diameter flex vent to hard pipe connection. Use silicone sealant at this joint also, overlap at least 1-1/4”, then secure the joint with the 7” diameter band clamp provided. Be careful not to damage or tear the flex vent pipe when tightening the clamp.
12. While the venting is still on the floor, assemble the roof jack components as shown in **Figure 31** and pre-install the roof jack assembly to the hard pipe approximately 18” from the top end of the hard pipe.

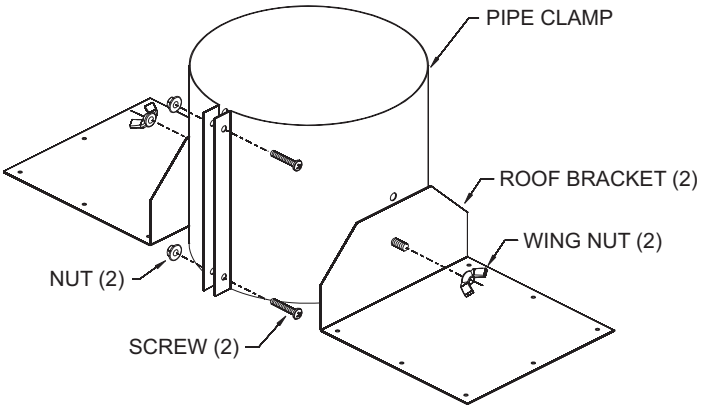


**Figure 31**

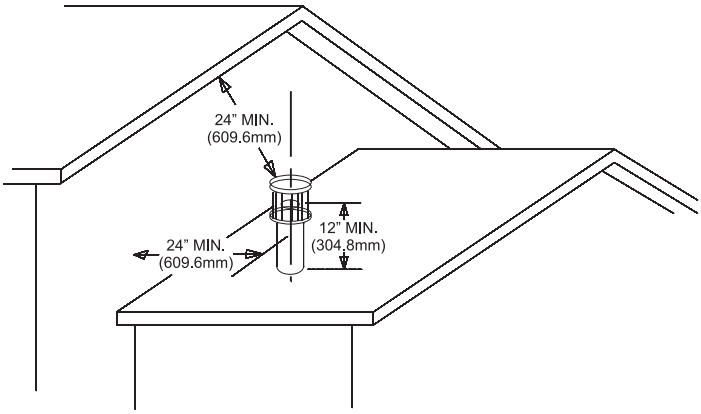


**Figure 32**

When terminating the vent cap near an exterior wall or overhang, maintain minimum clearances as shown in **Figure 32.**

13. Now the pre-assembled vent system may be carried to the roof, then lowered through the roof cutout opening (see step 5). Feed the flex vent end down through the roof opening and firestop/thimble assembly installed in steps 4 through 6.
14. Secure the roof support assembly to the roof sheathing with at least (4) nails/screws through each support bracket. Check that the combustible clearances through the roof framing will maintain at least a 1” clearance from the vent pipe.
15. Determine how high the vent terminal should be located above the roof line based on the roof pitch information shown in **Figure 33.** Adjust the vent system height by loosening the pre-installed roof support pipe clamp and sliding the vent pipe up or down as pre-determined, then re-tighten the pipe clamp. Install a couple of sheet metal screws through the pipe clamp into the outer hard vent pipe to lock in place.
16. Check to make sure that the bottom end of the flex vent is long enough to reach the fireplace adapter collars. If too long, trim off the extra flex vent not needed.

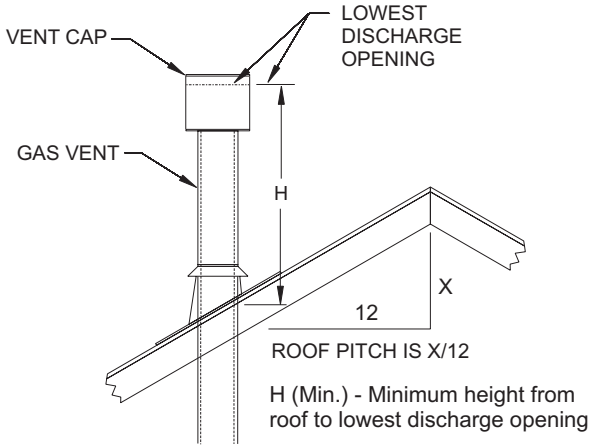


| ROOF PITCH | H (Min.) |
|---|---|
| Flat to 6/12 | 12” (305 mm) |
| 6/12 to 7/12 | 15” (381 mm) |
| Over 7/12 to 8/12 | 18” (457 mm) |
| Over 8/12 to 16/12 | 24” (610 mm) |
| Over 16/12 to 21/12 | 36” (914 mm) |

**Figure 33**

17. To attach the vent connections at the fireplace, be sure the 7” diameter adapter collar has been installed per step 3. Apply a bead of silicone sealant to the 4” diameter flex connector, then slide the flex pipe adapter collar into the fireplace flue collar and secure by installing a minimum of two (2) screws through the flue collar and into the adapter. **See Figure 34.**
18. Apply sealant to the 7” diameter adapter collar, slide outer flex vent over the collar, then secure with a 7” diameter band clamp. **See Figure 34.**
19. Once the lower connections are made and the flex pipe is secured with support bands as required (3 feet minimum between supports) then the roof flashing can be installed. **See Figure 35.**
20. Install the roof flashing, and seal using common constructions practices.
21. An additional storm collar band is provided in kit that may be used as an attic insulation shield. The collar can be installed around the flex pipe (or hard pipe) just above the firestop thimble. This collar will act as a shield to prevent blown insulation from entering the thimble.
22. To complete the vent installation, install the vent termination cap to the top of the hard vent pipe assembly. Mate up the flue and outer telescopes with the hard pipe assembly, then secure by installing a minimum of two (2) sheet metal screws into the overlapped flanges of the cap and pipe.
23. **Figure 36** shows a completed installation with components identified and other installation information such as heights and clearance to combustibles.

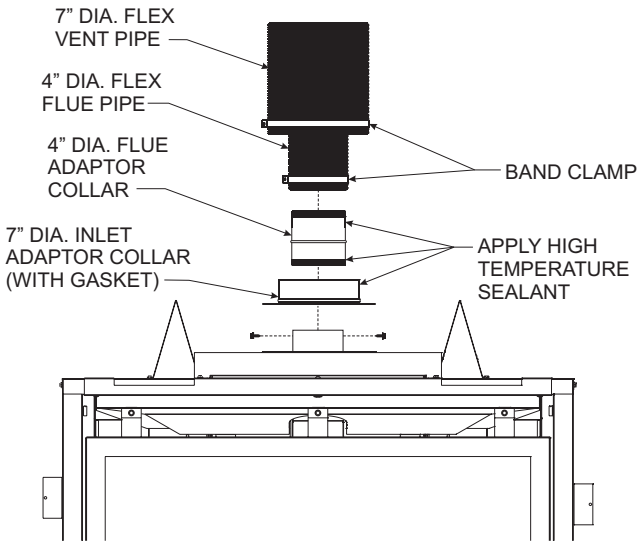


**Figure 34**

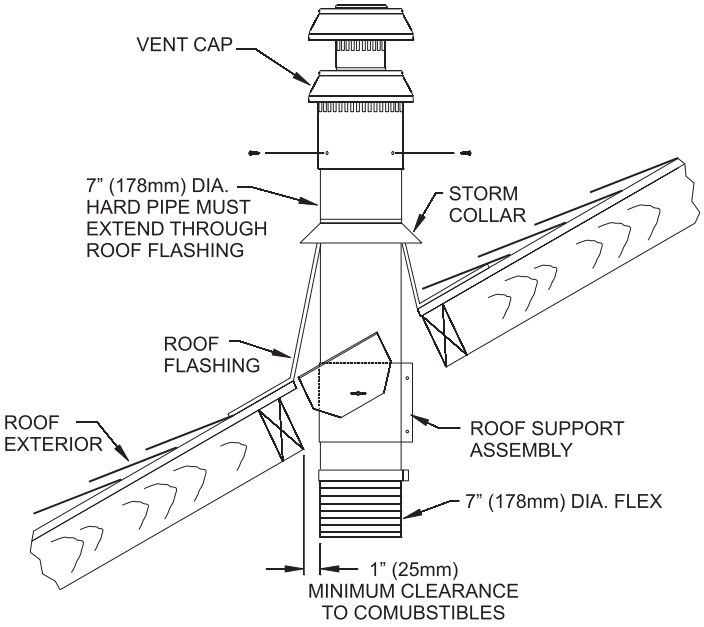


**Figure 35**

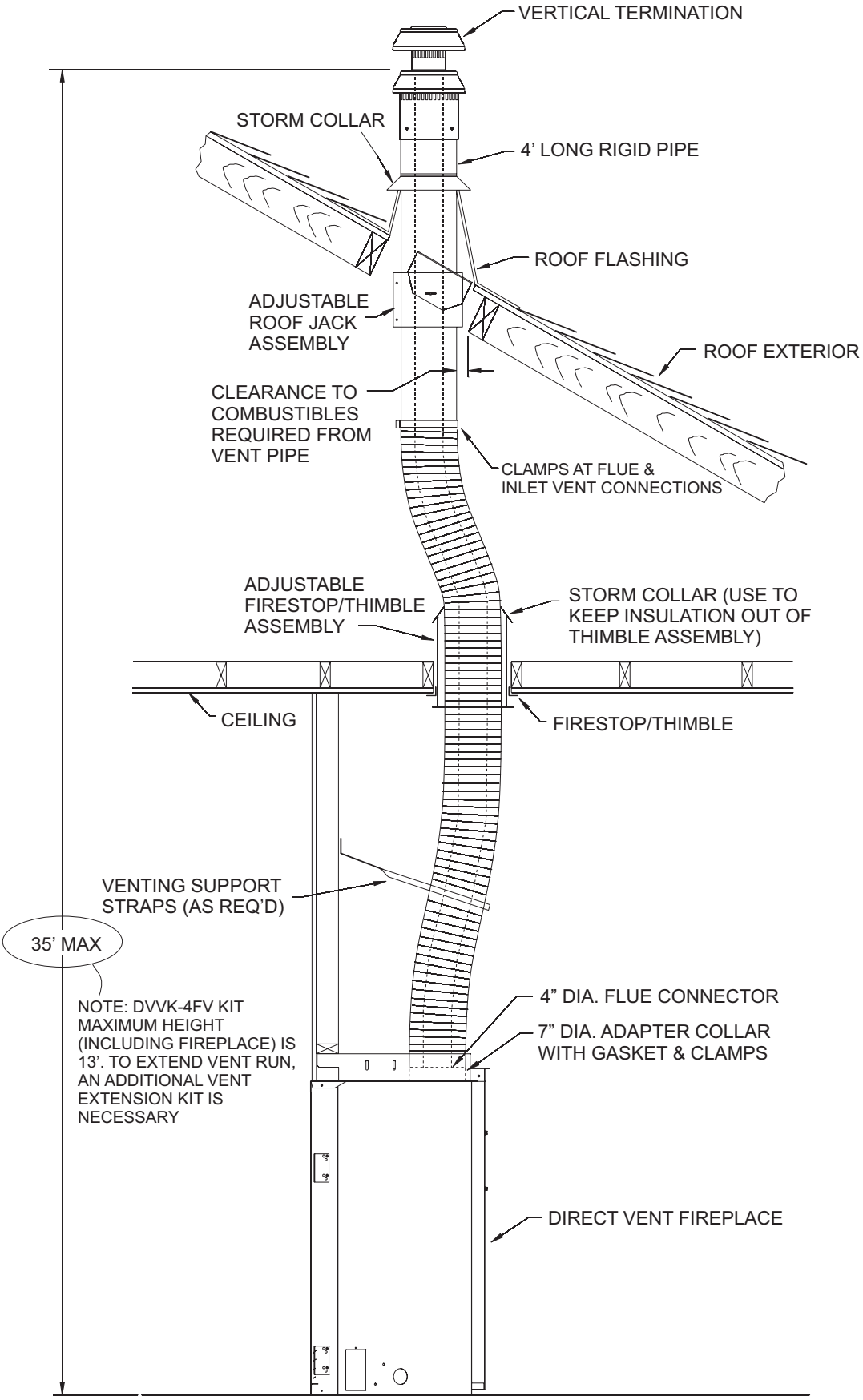
VERTICAL TERMINATION
STORM COLLAR
4' LONG RIGID PIPE
ROOF FLASHING
ADJUSTABLE ROOF JACK ASSEMBLY
ROOF EXTERIOR
CLEARANCE TO COMBUSTIBLES REQUIRED FROM VENT PIPE
CLAMPS AT FLUE & INLET VENT CONNECTIONS
ADJUSTABLE FIRESTOP/THIMBLE ASSEMBLY
STORM COLLAR (USE TO KEEP INSULATION OUT OF THIMBLE ASSEMBLY)
CEILING
FIRESTOP/THIMBLE
VENTING SUPPORT STRAPS (AS REQ'D)
35' MAX
NOTE: DVVK-4FV KIT MAXIMUM HEIGHT (INCLUDING FIREPLACE) IS 13'. TO EXTEND VENT RUN, AN ADDITIONAL VENT EXTENSION KIT IS NECESSARY
4" DIA. FLUE CONNECTOR
7" DIA. ADAPTER COLLAR WITH GASKET & CLAMPS
DIRECT VENT FIREPLACE

**Figure 36**

## Vertical Flex Termination Kit

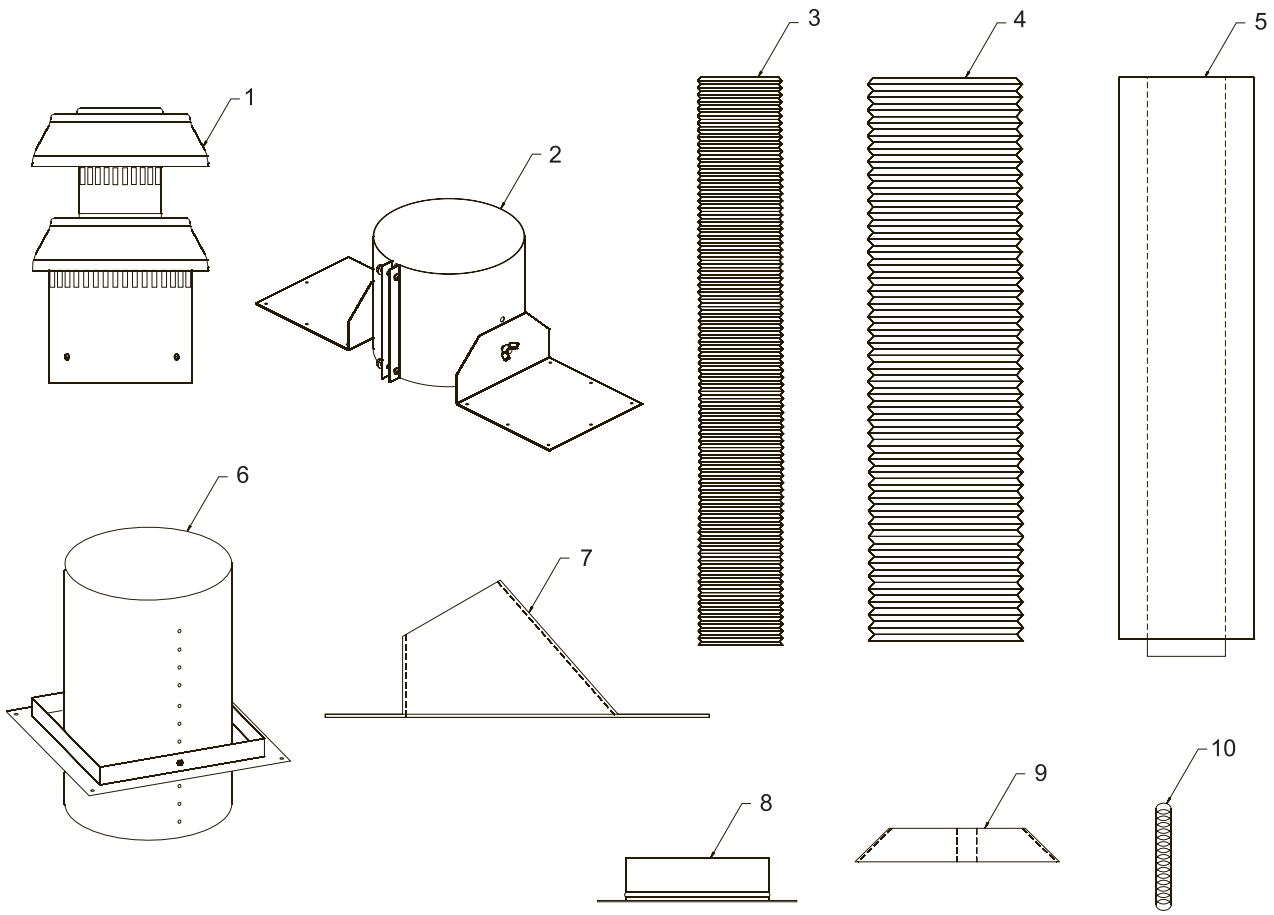


| Item Number | Item Description | Repair Part No. | Quantity Supplied |
|---|---|---|---|
| 1 | 4”/7” Vertical Termination Cap | MF100038 | 1 |
| 2 | Roof Support Kit | MF100503 | 1 |
| 3 | 2 Ply Alum Flex 4” Diameter by 6 ft. | MF04ALA2F006 | 1 |
| 4 | 2 Ply Alum Flex 7” Diameter by 6 ft. | MF07ALA2F006 | 1 |
| 5 | 4”/7” x 48” Rigid Pipe Assembly | MF100554 | 1 |
| 6 | Firestop Thimble Assembly | MF100124 | 1 |
| 7 | Roof Flashing (0/12 to 6/12) | MF100091 | 1 |
| 8 | 7” Flex Adapter Collar with Gasket | MF100524 | 1 |
| 9 | 7” Storm Collar | MF100147 | 2 |
| 10 | Spring Spacers | MF100548 | 5 |
| N/S | Clamp 4” Diameter | MF100330 | 2 |
| N/S | Clamp 7” Diameter | MF100534 | 2 |
| N/S | #8 x 1/2” Self Drilling Screws | N/A | 20 |
| N/S | HT Silicone | N/A | 1 |
| N/S | #8 x 5/8” Self Drilling Screws | N/A | 10 |

**CAUTION: Sharp edges, use protective gloves when installing.**

Tools Needed for Installation:
Sheet metal snips
5/16" nut driver
Phillips head screwdriver - #2
High temperature sealant or furnace cement rated for continuous use at 1,000°F minimum
Measuring tape

**Parts Verification**
See parts list on page 28 to verify components included in this vent kit prior to installation.

**NOTE:** If installing onto wood, lap, or vinyl siding, the vinyl siding kit should be used (sold separately, part number DV-822).

The vinyl siding vent kit, DV-822, is available from Empire Comfort Systems, Inc. The depth is 3" (76 mm), which enables the vent cap to be extended away from vinyl siding or projections. The wall depth plus the additional 3" (76 mm) depth of the vinyl siding vent cap extension should not exceed a total depth of 13 3/4" (349 mm).

If wall depth exceeds 13 3/4" (349 mm), extend system using 6 5/8" (168 mm) x 4" (102 mm) rigid venting (See Fireplace Instructions for approved lengths) **See Figure 38.**

**Installing Wall Thimble/Firestop Assembly**

1. Fix fireplace to permanent location. If using rigid venting system, install up to the location where it will exit the building.
2. Cut hole in wall for wall thimble/firestop assembly into your combustible wall. **See Figure 37.** Note: On brick or block exterior wall a 7" (178 mm) diameter hole needs to be cut.

   Measure the total wall thickness to determine whether or not the extension thimble is to be used. If the combustible wall depth is over 5 3/8" (137 mm), then the extension thimble should be used. **See Figure 37**.
3. Install the wall thimble assembly through the framed opening so the firestop plate is on the interior wall. **See Figure 37.** Telescope section should extend all the way through the exterior wall. Attach with (4) 10 x 1" screws.
4. When placing the vent cap on an exterior wall covered with combustibles such as wood, lap, or vinyl siding, install the vinyl siding kit to the exterior wall sheathing.

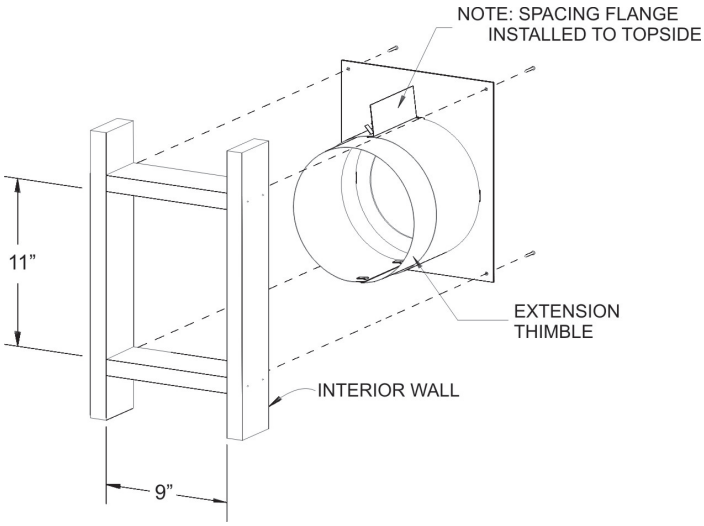


**Figure 37**

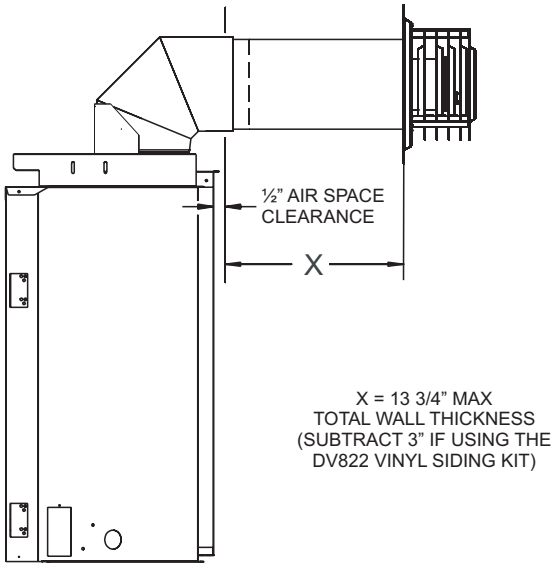


**Figure 38**

**Cutting Vent Tubes**

**This is the most important part of the installation.** With the fireplace (and the rigid venting system if used) fixed to its permanent location, the 6 5/8" (168 mm) diameter air inlet tube and the 4" (102 mm) diameter flue outlet tube are to be marked and cut using the following procedure.

5. Attach the inlet tube to the outside mounting plate. Align tinnerman clips on the tabs of the air inlet tube to the holes on outside mounting plate, and fix with (2) #10 x 1/2" screws.
6. With the vinyl siding kit installed to wall (if necessary), insert the 6 5/8" (168 mm) diameter tube with outside mounting plate attached through hole in wall. Connect to collar on fireplace or rigid vent system. Measure between wall or vent cap extension and outside mounting plate (**Figures 39 and 40**).

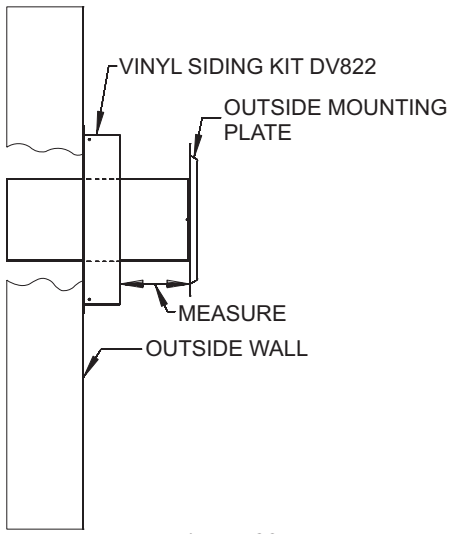


**Figure 39**

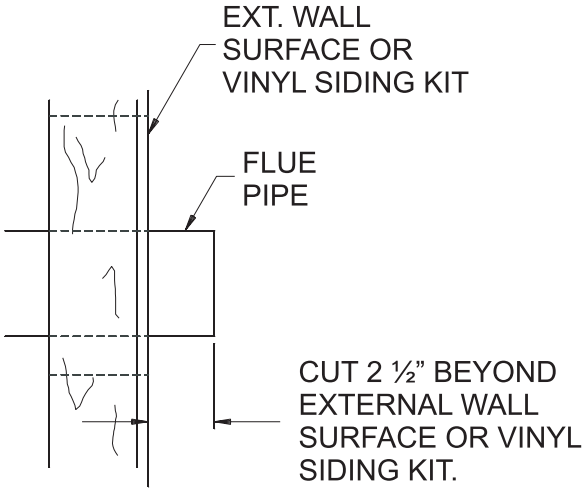


**Figure 40**

7. Remove outside mounting plate with tube attached from wall. Mark and cut the extra length of the 6 5/8" (168 mm) diameter tube from the opposite end. Do not crimp or enlarge tube.
8. Attach the 4" (102 mm) diameter flue outlet tube onto the rigid venting system or directly to fireplace. Ensure the 4" (102 mm) diameter flue outlet tube is placed as far as possible onto the rigid venting system. Mark the 4" (102 mm) diameter flue outlet tube 2 1/2" (64 mm) beyond the vinyl siding kit or wall. S**ee Figure 39.** Remove the 4" (102 mm) diameter flue outlet tube from rigid venting system. When installing directly to fireplace, tape gasket needs to be used.
9. Mark or wrap tape completely around the tubes at the marked points to help in making a true cut. Do not crimp or enlarge tubes.
10. From outside: Push the 6 5/8" (168 mm) diameter inlet tube/ mounting plate onto end of rigid venting system to correct position. Fasten the outside mounting plate to the vinyl siding kit or wall with (4) 10 x 1 1/2" screws. (Ensure upward slope).
11. From inside: Attach the inlet tube to the collar on the back of the fireplace (or the rigid venting system) using (3) self tapping screws.
12. Seal the 4" (102 mm) diameter flue outlet tube. Follow instructions and diagram. **See Figure 41**.
13. Fasten 4" (102 mm) diameter flue outlet tube in place. Do not "twist" the flue outlet tube into the fireplace collar (or rigid venting system). Hold the tube by the seam and push in using a perpendicular "rocking" motion. This ensures the seam on the tube stay intact.
14. Fasten vent cap end using (3) 10 x 1/2" screws to mounting plate.

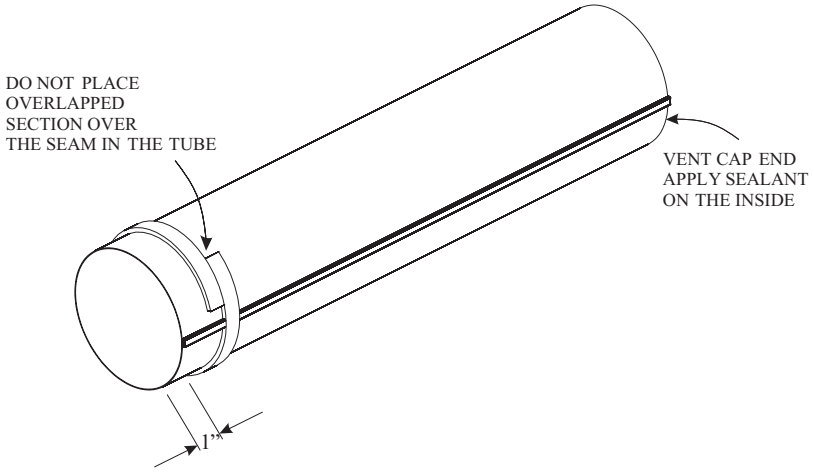


**Sealing 4" (102 mm) Diameter Flue Outlet Tube.**
**Figure 41**

**Note:** Tape gasket to be applied prior to installing to fireplace flue outlet tube only. Tape gasket should not be used when mating the flue outlet tube to a rigid venting system.

**Follow correct option according to venting method.**

**Connecting Directly to Fireplace**

If the air inlet and flue outlet tubes are to be connected directly to the unit (no rigid venting system is being used), then the gasket provided must be used to seal the 4” (102 mm) flue outlet tube. Peel the paper off the self-adhesive gasket and then wrap it around the end of the tube (if tube was cut, it is recommended to use cut end) as shown in **Figure 41.** Pull the gasket tight at all times while wrapping it around tube. The gasket ends should align, to form a complete seal. The overlapped section should NOT come in contact with the seam in the tube. Apply high temperature sealant to the opposite end of the tube (on the inside of the tube). The end with the gasket will attach to the back of the unit. Continue with Step 13.

**Connecting to Rigid Vent System**

If the air inlet and flue outlet tubes are to be connected to a rigid venting system (and not directly to the back of the unit), then **do not** use the gasket provided. High temperature sealant should be applied to the outside of the 4” diameter (102 mm) flue outlet tube (if tube was cut, it is recommended to use cut end) and to the inside of the tube on the end that connects to the vent cap. Continue with step 13.

**PARTS LIST**

| INDEX NUMBER | PART NUMBER | DESCRIPTION |
|---|---|---|
| 1 | DV769 | Vent Cap Assembly |
| 2 | 19193 | Outside Mounting Plate |
| 3 | 19194 | Air Inlet Tube |
| 4 | DV524 | Flue Outlet Tube |
| 5 | 19196 | Firestop/Thimble Assembly |
| 6 | 20527 | Gasket |

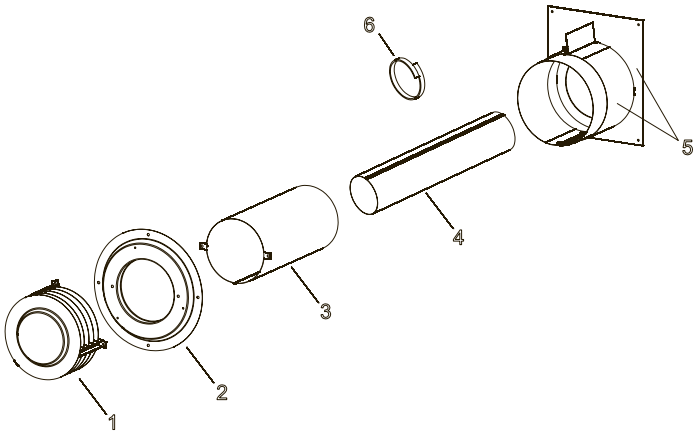

# DVVK-4F FLEX VENT INSTRUCTIONS

The **DVVK-4F FLEX VENT KIT** includes the following components:

- (1) Horizontal Termination Cap
- (1) 4-foot section of Flex vent with spacers (4" flue/7" outer pipe)
- (1) 4" diameter flue adapter collar
- (1) 7" diameter Outer Vent adapter collar
- (1) Wall Firestop/Thimble Assembly
- Hardware pack that includes band clamps and screws

**Flex venting can only be installed vertically off of the DVX Series fireplaces. When installing a horizontal vent run from top connections, maintain at least ½" rise for every 12" of vent run. Refer to Figure 54 when mounting termination near vinyl siding.**
**CAUTION: Always stretch and secure venting with wire or metal strapping to ensure that the horizontal runs do not sag.**
**If space permits, it is generally easier to attach venting in the top vent configuration.**
**Because of sharp edges, always use gloves when handling the flex vent components.**
**Vent connections should overlap a minimum of 1" for proper sealing.**
**Always follow the general venting requirements for vent terminal location, vent lengths, and clearance to combustible materials.**

## INSTALLATION

1. Unpack vent components and check that all items are included.
2. Check to see that the vent spacer springs are located around the flue vent at 8" and 12" intervals along its length. **See Figure 42.** If not, stretch the spacer springs to about 15" long and wrap them around the flue, then interlock the ends of each spring about 2". **See Figure 43.** Maintain equal distance between spring spacers.

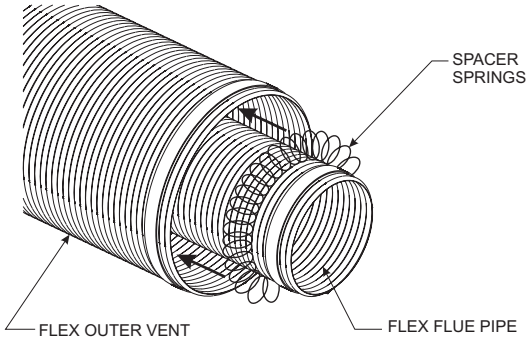


**Figure 42**

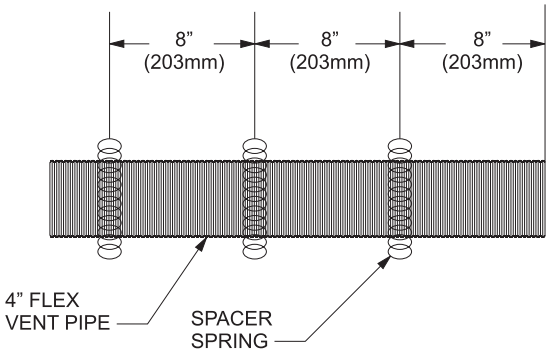


**Figure 43**

3. Remove the 6-⅝" diameter vent collar from the fireplace. Replace this collar with the 7" diameter Flex Vent adapter collar provided with the vent kit.
4. Slide the Flex Vent flue pipe into the Outer Flex Vent pipe.
5. Install the Wall Firestop/Thimble assembly as required through the wall. Refer to the venting charts in the fireplace manual to determine the proper height and size of the vent opening. The minimum opening should be 9" wide by 11" high. The minimum combustible clearance from the horizontal vent is 1" from sides and bottom, and 3" above the vent pipe. **See Figure 45.**
6. In most cases, after determining the length of the vent that is needed, it may be easier to install the flue and outer vent pipes to the Termination Cap first, then from the outside, feed the venting through the wall to the fireplace.
7. If the venting is to long, trim off any excess vent before attaching the vent end connectors.
8. Attach the Termination Cap to the outside of the house.
9. Prior to making the vent connections, apply high temperature sealant (1000 degree F min.) to the vent connections before securing with the band clamps provided. Note: The flue pipe end **without the adapter** is to be installed to the Termination Cap.
10. Apply sealant to the outside of the flue pipe adapter and connect to the flex flue pipe. Then insert the adapter into the fireplace flue. Secure flue adapter to the fireplace flue with a minimum of two screws provided. **See Figure 44.**
11. Attach the Outer Vent pipe to the 7" diameter Collar on the fireplace with a large band clamp provided. Sealant may also be used on the outer vent connections.
12. Check all vent connections for tightness. Make sure horizontal venting has the proper rise and combustible clearances required. Refer to venting charts in fireplace instruction manual.

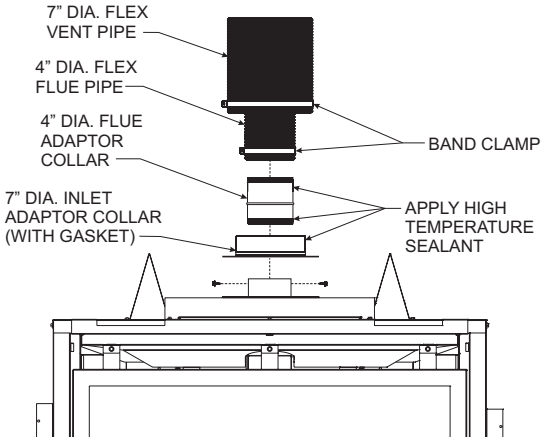


**Figure 44**

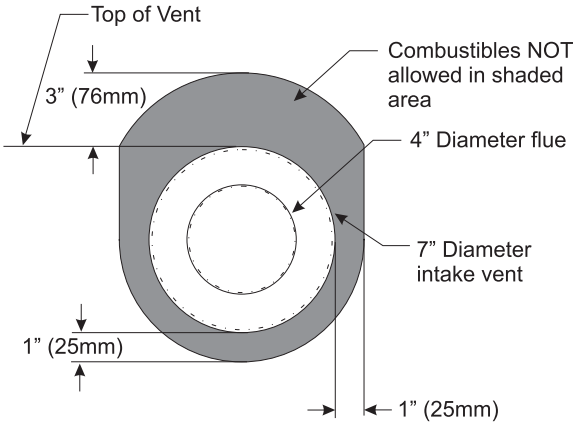


**Figure 45**

# TERMINATION CLEARANCES

Termination clearance for buildings with combustible and noncombustible exteriors.

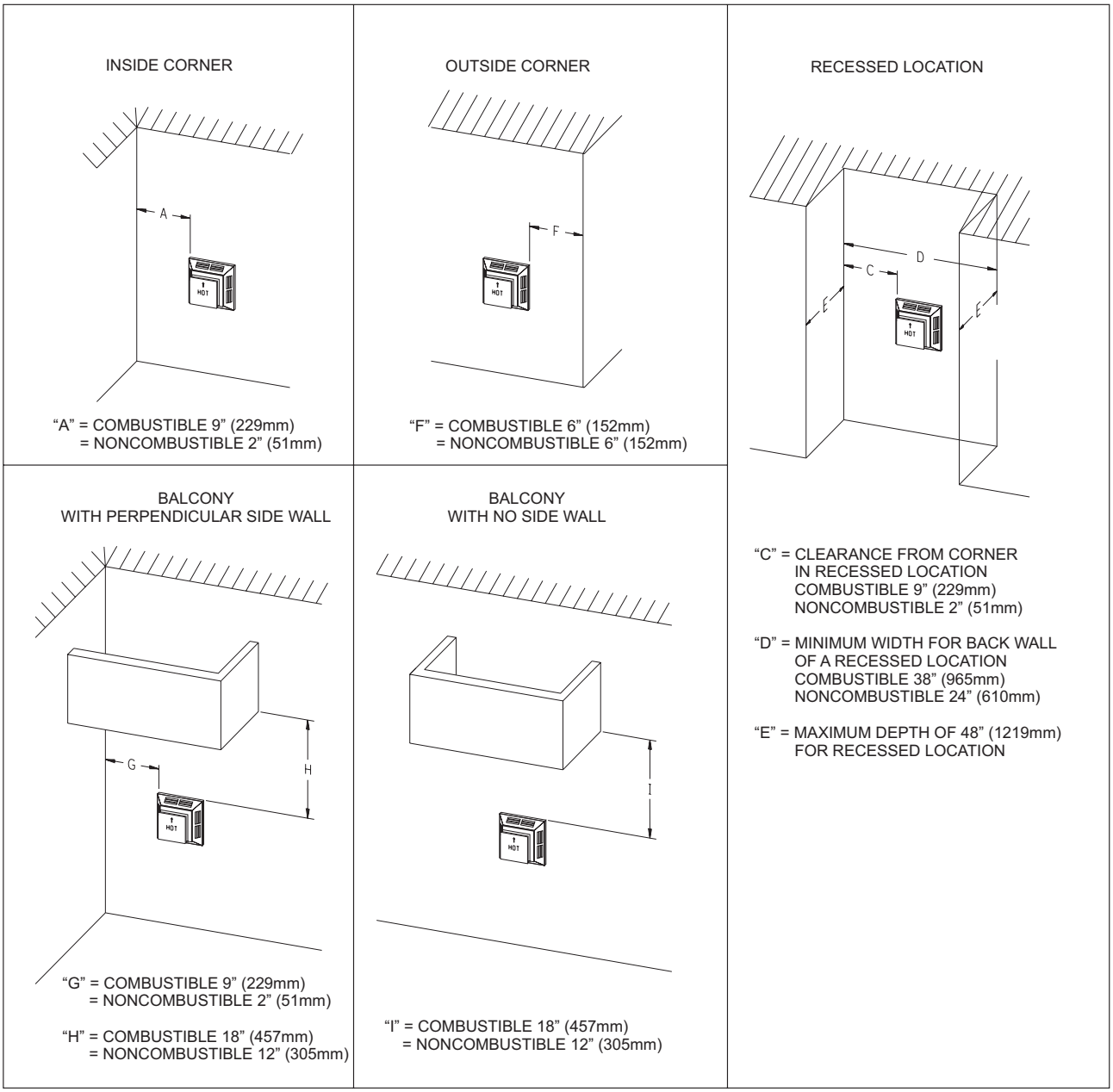


**Figure 46**

**Vertical Sidewall Installations**

**Important!** Minimum clearance between vent pipes and combustible materials is three (3") (76 mm) on top, and (1") (25 mm) on bottom and sides.

**Important!** When vent termination exits through foundation less than 20" below siding outcrop, the vent pipe must extend outward so that the horizontal vent terminal is located flush to, or beyond the outcrop siding.

**Information on Various Venting Routes and Components**

**Important**: It is always best to locate the fireplace in such a way that minimizes the number of offsets and horizontal vent length.

Since it is very important that the venting system maintain its balance between the combustion air intake and the flue gas exhaust, certain limitations as to vent configurations apply and must be strictly adhered to.

The graph showing the relationship between vertical and horizontal side wall venting will help to determine the various vent lengths allowable.

The horizontal vent run refers to the total length of vent pipe from the flue collar of the fireplace to the face of the outer wall.

The maximum horizontal vent run is 20 feet (457 cm) when the vertical vent rise is 8 feet (244 cm). **See Figure 17.**

Venting terminals shall not be recessed into wall or siding.

# VENT CLEARANCES

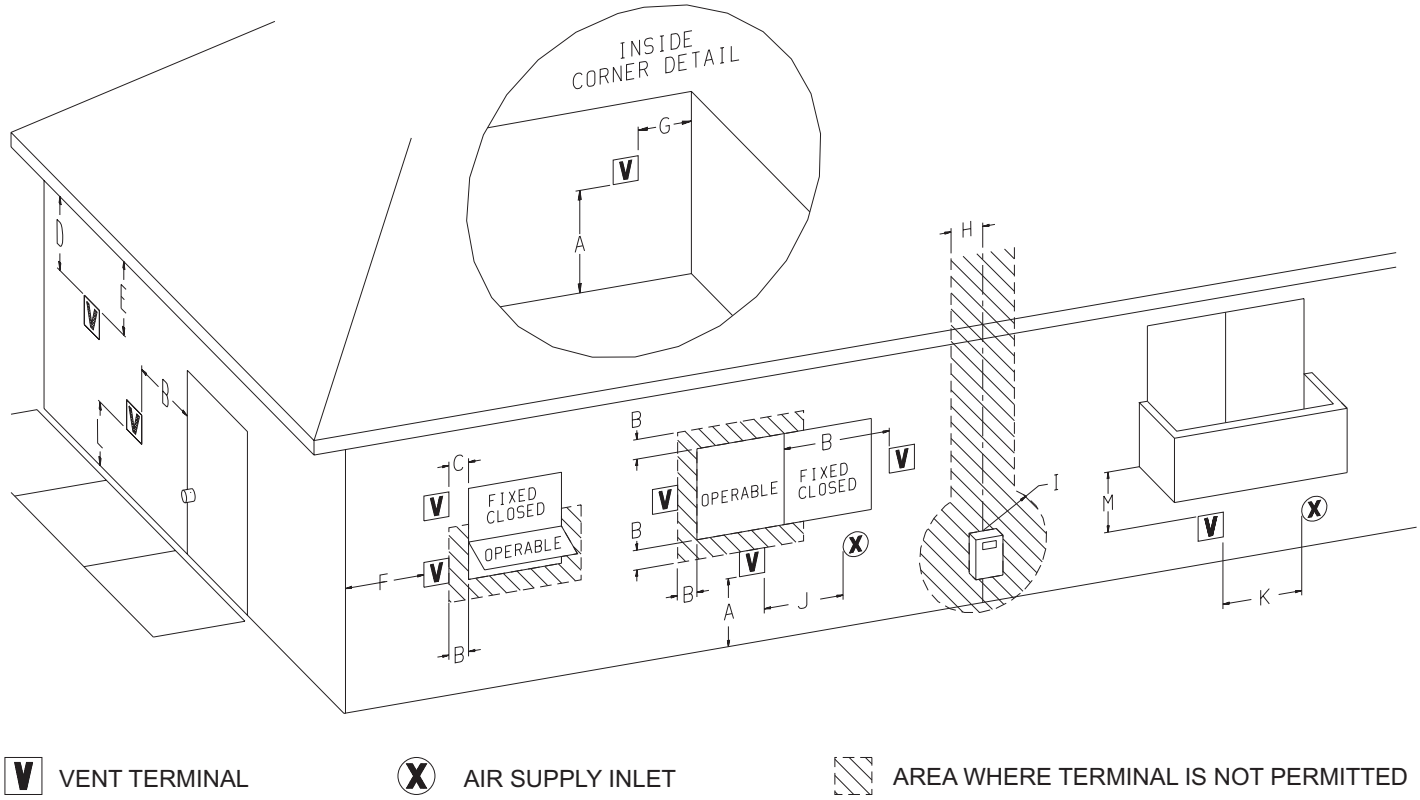


**Figure 47**

A = *Clearance above grade, veranda, porch, deck or balcony [*12 inches (30cm) minimum]

B = clearance to window or door that may be opened [*12 inches (30cm) minimum for appliances < 100,000 Btuh (30kW)

C = clearance to permanently closed window [minimum 12 inches (30cm) recommended to prevent condensation on window]

D = vertical clearance to ventilated soffit located above the terminal within a horizontal distance of 24 inches (60 cm) from the center of the terminal [18 Inches (46 cm) minimum

E = clearance to unventilated soffit [12 inches 30cm) minimum]

F = clearance to outside corner [See Page 30]

G = clearance to inside corner [See Page 30]

H = *not to be installed above a meter/regulator assembly within 3 feet (90cm) horizontally from the center-line of the regulator

I = clearance to service regulator vent outlet [*6 feet (1.8m) minimum]

J = clearance to non-mechanical air supply inlet to building or the combustion air inlet to any other appliance [*12 inches (30cm) minimum for appliances ≤ 100,000 Btuh (30 kW)

36 inches (90cm) minimum for appliances > 100,000 Btuh (30kW)]

K = clearance to a mechanical air supply inlet [* 6 feet (1.8m) minimum]

L = †clearance above paved sidewalk or a paved driveway located on public property [*7 feet (2.1m) minimum]

M = clearance under veranda, porch, deck, or balcony [*12 inches (30cm) minimum ¥]

† a vent shall not terminate directly above a sidewalk or paved driveway which is located between two single family dwellings and serves both dwellings*

¥ only permitted if veranda, porch, deck, or balcony, is fully open on a minimum of 2 sides beneath the floor*

* as specified in CGA B149 Installations Codes or ANSI Z223.1. Note: Local Codes or Regulations may require different clearances.

# VENT SYSTEM IDENTIFICATION

**Special Venting Components (Simpson Duravent)**

See Empire Comfort Systems Retail Price List for Simpson Duravent part numbers and pricing.

| Special DV Vent Kits<br>Available from Empire Comfort Systems, Inc. dealers. | |
|---|---|
| **DVVK-4VP**<br>(DVVK-4V) | Direct-Vent Fireplace Vent Kit - Vertical, Includes 46DVA-VCH, 46DVA-SC and 46DVA-F6 |
| **DVVK-4TP**<br>(DVVK-4T) | Direct-Vent Fireplace Vent Kit for Top Vent, Thru-the-wall, 8 to 11 inch wall thickness, Includes 46DVA-08A, 46DVA-09, 46DVA-HC, 46DVA-E90 and 46DVA-WT |
| **DVVK-4TSP**<br>(DVVK-4TS) | Direct-Vent Fireplace Vent Kit for Top Vent, Thru-the-wall, 5 to 7 inch wall thickness, Includes 46DVA-06, 46DVA-HCC, 46DVA-E90 and 46DVA-WT |
| **DVVK-4FV** | Direct-Vent Fireplace Vertical Flex Vent Kit |
| **DVVK-4RE** | Direct-Vent Fireplace Vent Kit, Thru-the-wall, 5 to 13 3/4 inch wall thickness |

| Special DV Vent Kits<br>Available from Empire Comfort Systems, Inc. dealers. | |
|---|---|
| **DVVK-5RP**<br>(DVVK-5R) | Direct-Vent Fireplace Vent Kit for Rear Vent, 6 to 12 inch wall thickness, Includes 58DVA-06, 58DVA-WT, and 58DVAHC |
| **DVVK-5TP**<br>(DVVK-5T) | Direct-Vent Fireplace Vent Kit for Top Vent, Thru-the-wall, 4 to 6 inch wall thickness, Includes 58DVA-E90, 58DVA-HC, 58DVA-06, and 58DVA-WT |
| **DVVK-5VP**<br>(DVVK-5V) | Direct Vent Fireplace Vent Kit - Vertical, Includes58DVA-VCH, 58DVA-SC, and 58DVA-F6 |
| **DVVK-5TS** | Top Vent Kit (Horizontal) - 4½" to 6" wall thickness (114.3 mm to 152 mm) |
| **DVVK-5F** | Horizontal Flex Vent Kit (4' Flex) (1.22m) |

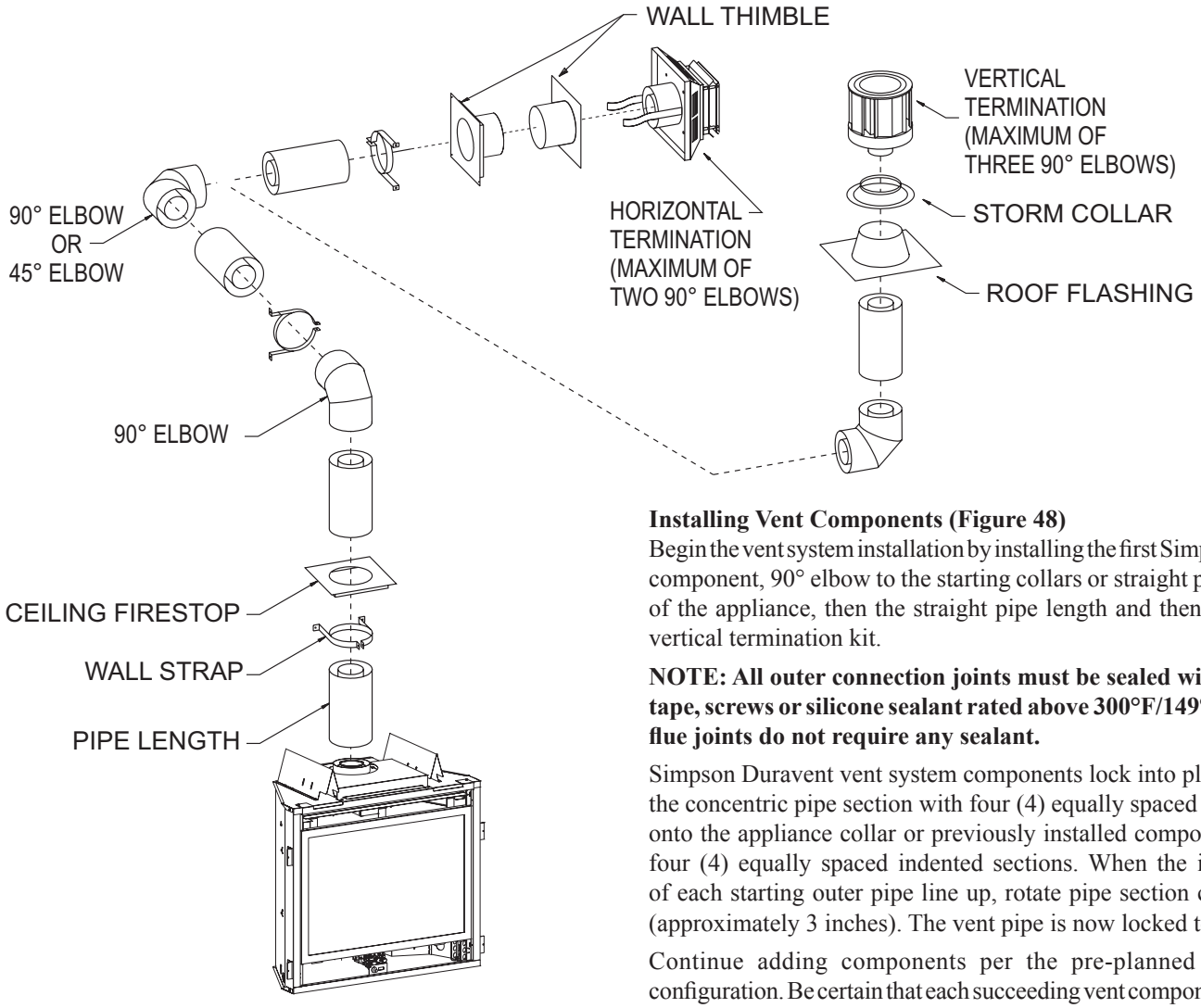


**Figure 48**

**Installing Vent Components (Figure 48)**

Begin the vent system installation by installing the first Simpson Duravent component, 90° elbow to the starting collars or straight pipe on the top of the appliance, then the straight pipe length and then horizontal or vertical termination kit.

**NOTE: All outer connection joints must be sealed with aluminum tape, screws or silicone sealant rated above 300°F/149°C. The inner flue joints do not require any sealant.**

Simpson Duravent vent system components lock into place by sliding the concentric pipe section with four (4) equally spaced interior beads onto the appliance collar or previously installed component end with four (4) equally spaced indented sections. When the internal beads of each starting outer pipe line up, rotate pipe section clockwise 90° (approximately 3 inches). The vent pipe is now locked together.

Continue adding components per the pre-planned vent system configuration. Be certain that each succeeding vent component is securely fitted and locked into the preceding component in the vent system.

**Installing Support Brackets (Figure 49)**

A horizontal pipe support MUST BE used for each 3 feet of horizontal run. The pipe supports should be placed around the pipe and nailed in place to framing members. There MUST BE a 3 inch clearance to combustibles above flue pipe and elbows and 1 inch clearance on both sides and bottom of the flue pipe to combustibles on all horizontal pipe sections and elbows.

Vertical runs of this vent systems must be supported every 4 feet above the appliance flue outlet by wall brackets attached to the vent pipe and secured with nails or screws to structural framing members.

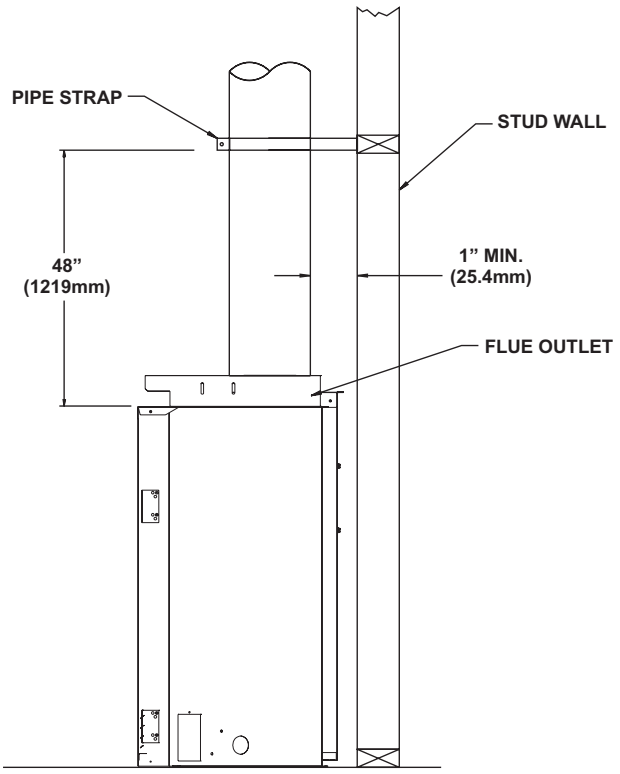


**Figure 49**

**Installing Firestops (Figures 50, 51, 52, and 53)**

Firestops are required for safety whenever the vent system passes through an interior wall, an exterior wall, or a ceiling. These firestops act as a firebreak heat shield and as a means to insure that minimum clearances are maintained to the vent system.

Horizontal runs in the vent system which pass through either interior or exterior walls, require the use of wall firestops on both sides of the wall through which the vent passes.

Cut an appropriate sized hole in wall. **See Figure 50.** Position firestop on interior side of wall for hole.

**Attention:** Wall firestop hole is off-set towards bottom of wall opening. Secure with nails or screws. Continue the vent run through the firestop. **See Figure 50**.

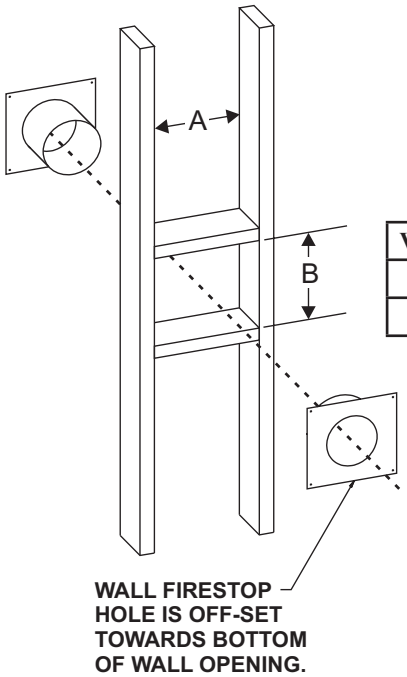


| Vent Size | A | B |
|---|---|---|
| 6 5/8" | 10" | 11" |
| 8" | 10 3/8" | 12 3/8" |

**Figure 50**

Vertical runs of this system which pass through ceilings require the use of ONE (1) ceiling firestop at the hole in each ceiling through which the vent passes.

Position a plumb bob directly over the center of the vertical vent component and mark the ceiling to establish the center point of the vent. Drill a hole or drive a nail through this center point and check the floor above for any obstructions such as wiring or plumbing runs. Reposition the appliance and vent system, if necessary, to accommodate ceiling joists and/or obstructions.

Cut an appropriate sized hole through the ceiling, using the center point previously marked. **See Figure 51.** Frame the hole with framing lumber the same size as the ceiling joists. **See Figure 51**. If the area above the ceiling is NOT an attic, position and secure the ceiling firestop on the ceiling side of the previously cut and framed hole. **See Figure 52.** If the area above the ceiling is an attic, position and secure the firestop on top of the previously framed hole. **See Figure 53.**

**NOTE:** Remove insulation from the framed area in the attic before installing the firestop and/or vent pipes.

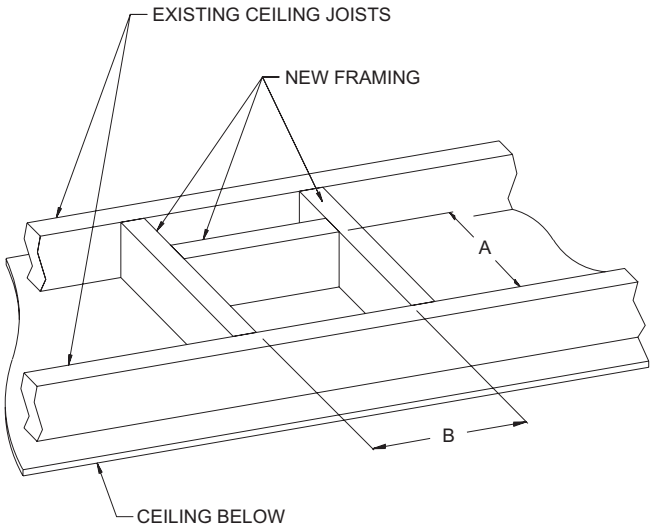


| Vent Size | A | B |
|---|---|---|
| 6 5/8" | 10" | 10" |
| 8" | 10 1/2" | 10 1/2" |

**Figure 51**

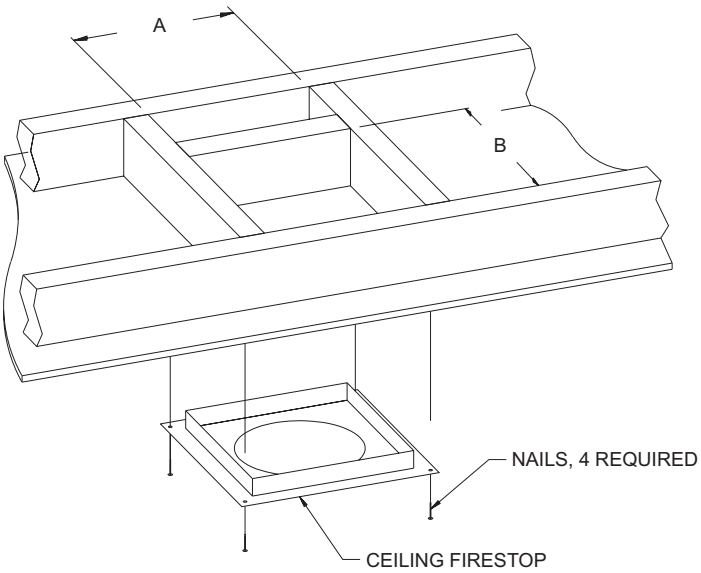


| Vent Size | A | B |
|---|---|---|
| 6 5/8" | 10" | 10" |
| 8" | 10 1/2" | 10 1/2" |

**Figure 52**

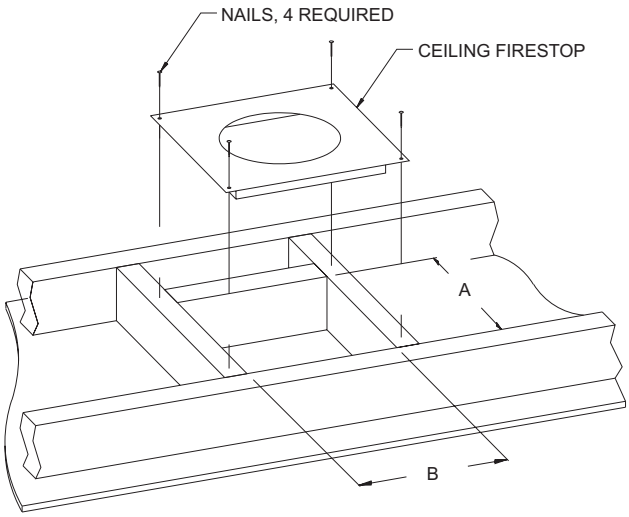


| Vent Size | A | B |
|---|---|---|
| 6 5/8" | 10" | 10" |
| 8" | 10 1/2" | 10 1/2" |

**Figure 53**

See **Horizontal Termination** Page 35 and **Vertical Termination** Pages 37 and 38.

# HORIZONTAL TERMINATION

**NOTE:** Termination cap should pass through the wall firestop from the exterior of the building. Adjust the termination cap to its final exterior position on the building.

Warning: Termination cap must be positioned so that arrow is pointing up.

Attach the termination cap with the four wood screws provided. Before attachment of the termination, run a bead of silicone sealant rated above 250°F on its outside edge too, so as to make a seal to the exterior wall.

NOTE: Wood screws can and should be replaced with appropriate fasteners for use on stucco, brick, concrete or other types of siding.

CAUTION: If exterior walls are finished with vinyl siding, (or materials that could become discolored or warp) it is necessary to install a vinyl siding standoff.

The vinyl siding standoff will be installed between the vent termination and the exterior wall. **See Figure 54.** This horizontal vent termination bolts onto the flat portion of the vinyl siding standoff, so an air space will exist between the wall and the termination cap.

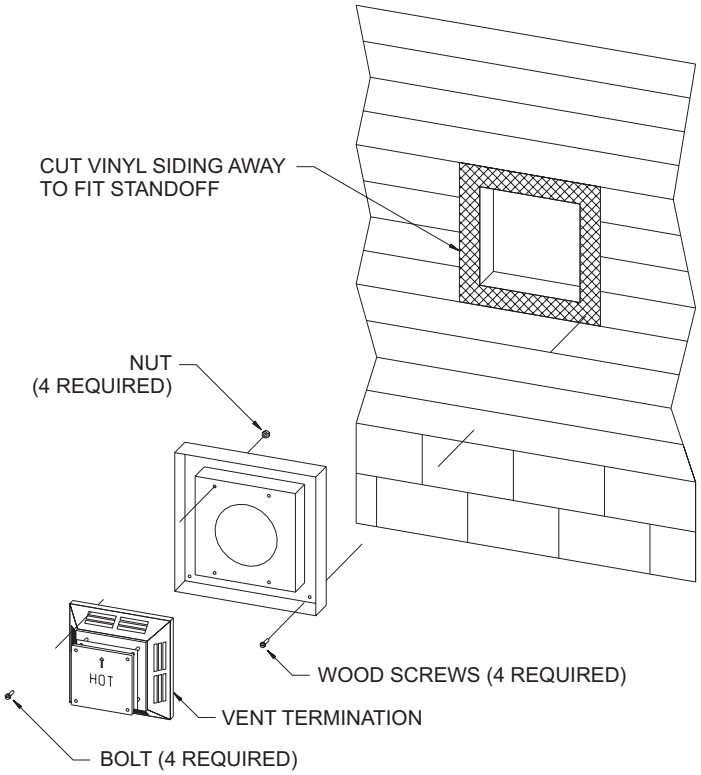


**Figure 54**

# DVVK-5F FLEX VENT INSTRUCTIONS

The **DVVK-5F FLEX VENT KIT** includes the following components:

- (1) Horizontal Termination Cap
- (1) 4-foot section of Flex vent with spacers (5" flue/8" outer pipe) with flue adapter collar
- (1) Wall Firestop/Thimble Assembly
- Hardware pack that includes band clamps and screws

**Flex venting can only be installed vertically off of the DVX Series fireplaces. When installing a horizontal vent run from top connections, maintain at least ½" rise for every 12" of vent run. Refer to the Figure 54 when mounting termination near vinyl siding.**
**CAUTION: Always stretch and secure venting with wire or metal strapping to ensure that the horizontal runs do not sag.**
**If space permits, it is generally easier to attach venting in the top vent configuration.**
**Because of sharp edges, always use gloves when handling the flex vent components.**
**Vent connections should overlap a minimum of 1" for proper sealing.**
**Always follow the general venting requirements for vent terminal location, vent lengths, and clearance to combustible materials.**

**INSTALLATION**

1. Unpack vent components and check that all items are included.
2. Check to see that the vent spacer springs are located around the flue vent at 8" and 12" intervals along its length. **See Figure 55.** If not, stretch the spacer springs to about 15" long and wrap them around the flue, then interlock the ends of each spring about 2". **See Figure 56.** Maintain equal distance between spring spacers.

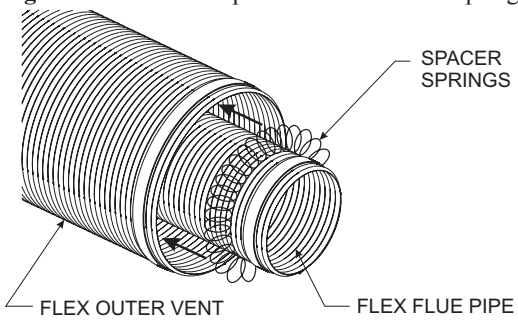


**Figure 55**

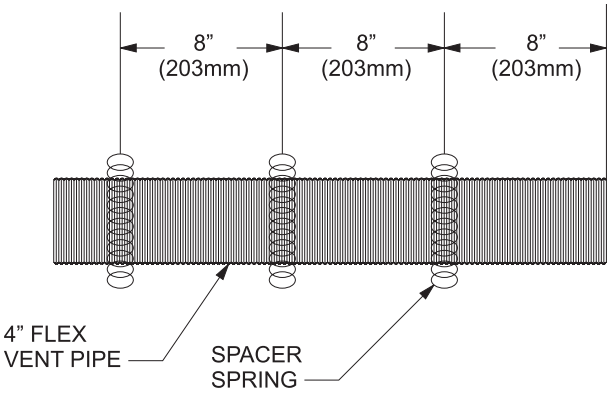


**Figure 56**

3. Use existing 8" diameter inlet collar to attach outer vent pipe.
4. Install the Wall Firestop/Thimble assembly as required through the wall. Refer to the venting charts in the fireplace manual to determine the proper height and size of the vent opening. The minimum opening should be 10" wide by 12" high. The minimum combustible clearance from the horizontal vent is 1" from sides and bottom, and 3" above the vent pipe. **See Figure 56.**
5. In most cases, after determining the length of the vent that is needed, it may be easier to install the flue and outer vent pipes to the Termination Cap first, then from the outside, feed the venting through the wall to the fireplace.
6. If the venting is to long, trim off any excess vent before attaching the vent end connectors.
7. Attach the Termination Cap to the outside of the house.
8. Prior to making the vent connections, apply high temperature sealant (1000 degree F min.) to the vent connections before securing with the band clamps provided. Note: the flue pipe end without the adapter is to be installed to the Termination Cap.
9. Apply sealant to the outside of the flue pipe adapter and connect to the flex flue pipe. Then insert the adapter into the fireplace flue. Secure flue adapter to the fireplace flue with a minimum of two screws provided. **See Figure 57.**
10. Attach the Outer Vent pipe to the 8" diameter collar on the fireplace with a large band clamp provided. Sealant may also be used on the outer vent connections.
11. Check all vent connections for tightness. Make sure horizontal venting has the proper rise and combustible clearances required. Refer to venting charts in fireplace instruction manual.

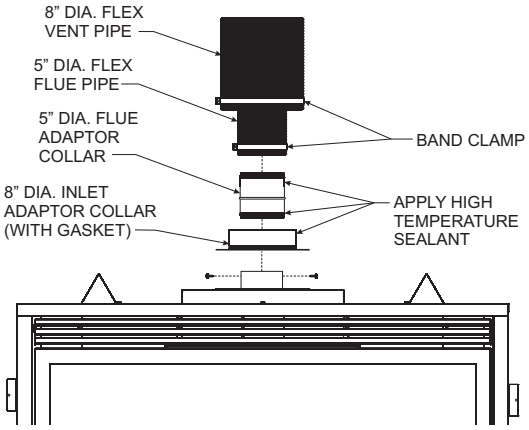


**Figure 57**

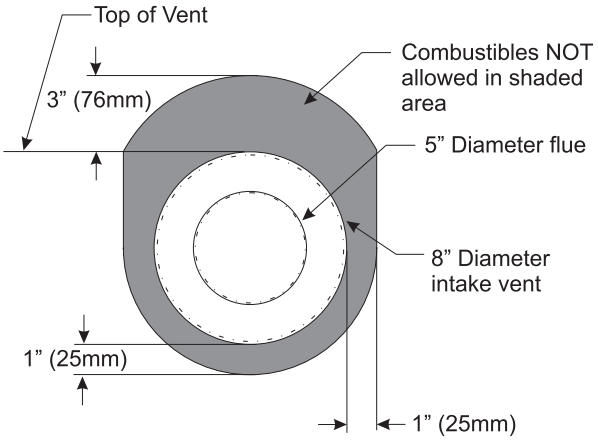


**Figure 58**

# VERTICAL TERMINATION

Locate and mark the center point of the venting pipe. Using a nail on the underside of the roof and drive this nail through this center point. Make the outline of the roof hole around this center point.

**NOTE:** Size of the roof hole dimensions depend on the pitch of the roof. There must be a 1 inch clearance (25 mm) to the vertical pipe sections. This clearance is to all combustible material.

Cover the opening of the vent pipe and cut and frame the roof hole. Use framing lumber the same size as the roof rafters and install the frame securely. Flashing anchored to frame must withstand high winds. The storm collar is placed over this joint to make a water-tight seal. Non-hardening sealant should be used to completely seal this flashing installation.

**Determining Minimum Vent Height Above the Roof.**

**WARNING: Major U.S. building codes specify minimum chimney and/or vent height above the roof top. These minimum heights are necessary in the interest of safety. These specifications are summarized in Figure 59.**

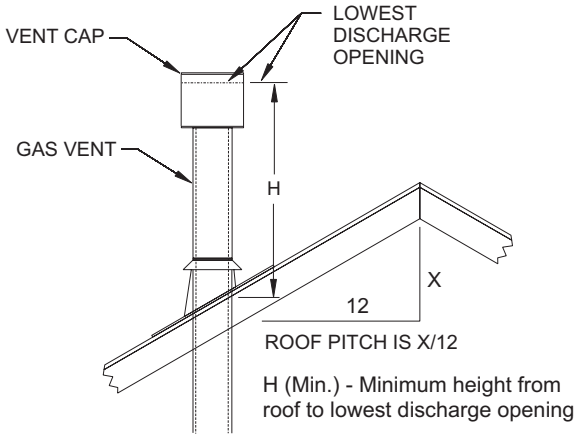


| ROOF PITCH | H (Min.) |
|---|---|
| Flat to 6/12 | 12" (305 mm) |
| 6/12 to 7/12 | 15" (381 mm) |
| Over 7/12 to 8/12 | 18" (457 mm) |
| Over 8/12 to 16/12 | 24" (610 mm) |
| Over 16/12 to 21/12 | 36" (914 mm) |

**Figure 59**

Note that for steep roof pitches, the vent height must be increased. In high wind conditions, nearby trees, adjoining roof lines, steep pitched roofs, and other similar factors can result in poor draft, or down-drafting. In these cases, increasing the vent height may solve this problem.

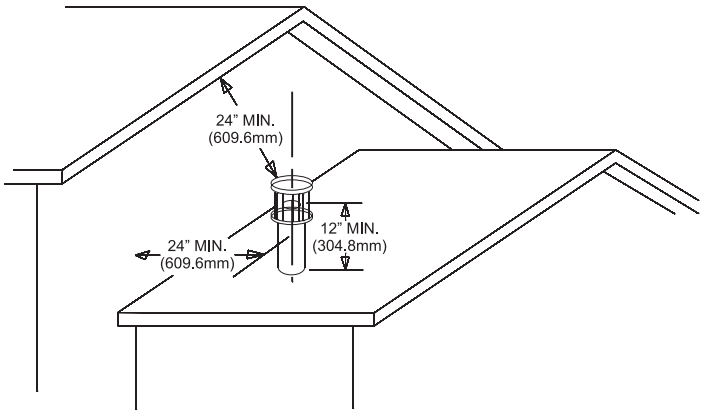


**Figure 60**

When terminating the vent cap near an exterior wall or overhang, maintain minimum clearances as shown in **Figure 60.**

**General Maintenance**

Conduct an inspection of the venting system semi-annually. Recommended areas to inspect are as follows:

1. Check areas of the venting system which are exposed to the elements for corrosion. These will appear as rust spots or streaks and, in extreme cases, holes. These components should immediately be replaced.
2. Remove the cap and shine a flashlight down the vent. Remove any bird nests or other foreign material.
3. Check for evidence of excessive condensate, such as water droplets forming in the inner liner and subsequently dripping out at joints. Condensate can cause corrosion of caps, pipe and fittings. It may be caused by having excessive lateral runs, too many elbows and exterior portions of the system being exposed to cold weather.
4. Inspect joints to verify that no pipe sections or fittings have been disturbed and, consequently, loosened. Also, check mechanical supports, such as wall straps or plumbers' tape for rigidity.

Venting terminal shall not be recessed into a wall or siding.

A removable panel or other means must be provided in the enclosure for visual inspection of the flue connection.

NOTE: This also pertains to vertical vent systems installed on the outside of the building.

Slide the vertical vent cap over the ends of the vent pipe and secure. **See Figure 61.**

**Installing the Vent System in a Chase**

A chase is a vertical box-like structure built to enclose the gas appliance and/or it's vent system. Vertical vent runs on the outside of a building may be, but are not required to be installed inside a chase.

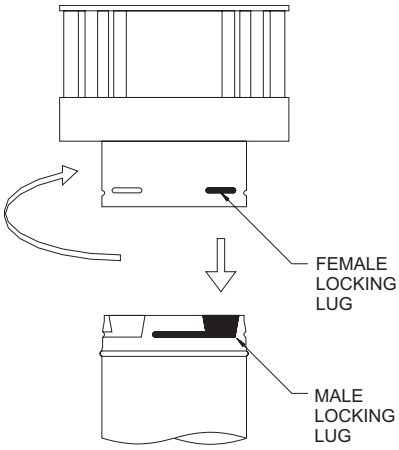


**Figure 61**

CAUTION: Treatment of firestop spacers and construction of the chase may vary with the type of building. These instructions are not substitutes for the requirements of local building codes. Therefore, your local building codes must be checked to determine the requirements for these steps.

NOTE: When installing this vent system in a chase, it is always good building practice to insulate the chase as you would the outside walls of your home. This is especially important for cold climate installations. Upon completion of building your chase framing, install the vent system by following the instructions in this manual. Remember to build the chase large enough so that minimum clearance of combustible materials (including insulation) to the vent system are maintained.

**Reassembly and Resealing Vent Pipe System**

Attach vent pipe to inlet and outlet vent adaptor on fireplace, replace horizontal and vertical pipe lengths, elbows and horizontal or vertical termination kit.

All vent system components lock into place by sliding the concentric pipe section with four (4) equally spaced interior beads onto the appliance collar or previously installed component end with four (4) equally spaced indented sections. When the internal beads of each starting outer pipe line up, rotate pipe section clockwise 90° (approximately 3 inches). The vent pipe is now locked together.

Continue replacing components per the vent system configuration. Be certain that each succeeding vent component is securely fitted and locked into the preceding component in the vent system.

**Reassembly and Resealing Gas Accumulation Relief System Glass Frame Assembly and Combustion Chamber**

Whenever the glass frame assembly is pivoted open by a delayed ignition in the main burner, the glass frame assembly gaskets and combustion chamber must be examined by a qualified service person for damage. All damaged gaskets on the glass frame assembly and combustion chamber must be replaced by a qualified service person. If damage occurs to the combustion chamber, it must be replaced by a qualified service person. Contact Empire Comfort Systems, Inc. for replacement parts.

**Vertical Through the Roof Applications (Figure 62)**

Your Gas Fireplace has been approved for:

a) Vertical installations up to 40 feet in height.
b) Two sets of 45 degree elbow offsets within these vertical installations. From 0 to a maximum of 8 ft. a vent pipe can be used between elbows.
c) Wall straps must be used to support offset pipe every 4'.

This application will require that you first determine the roof pitch and use the appropriate venting components.

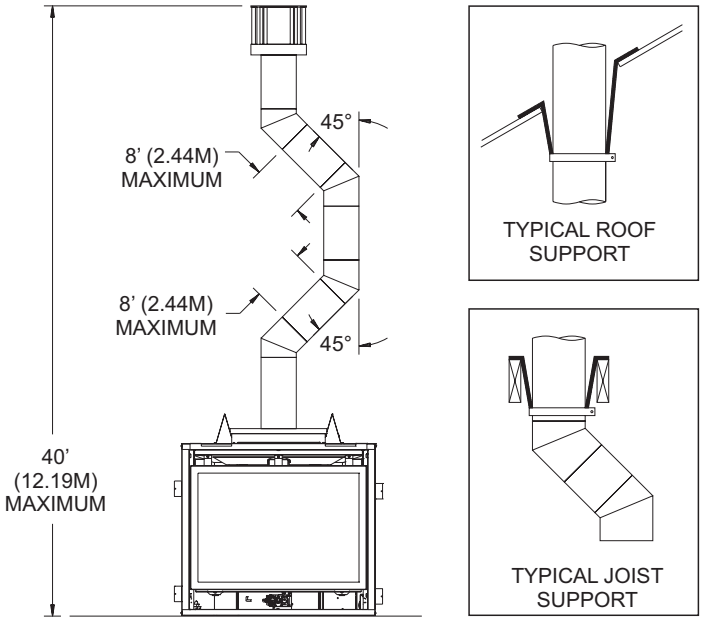


**Figure 62**

# LOG IDENTIFICATION

| | |
|---|---|
| <br>**REAR BOTTOM LOG (A)**<br>Part Number - R9228 | <br>**REAR TOP LOG (B)**<br>Part Number - R9222 |
| <br>**BOTTOM LEFT LOG (C)**<br>Part Number - R9227 | <br>**BOTTOM LEFT CENTER LOG (D)**<br>Part Number - R9372 |
| <br>**BOTTOM RIGHT CENTER LOG (E)**<br>Part Number - R9225 | <br>**BOTTOM RIGHT LOG (F)**<br>Part Number - R9229 |
| 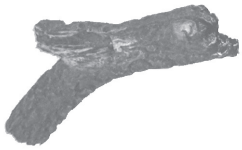 <br>**FRONT LEFT LOG (G)**<br>Part Number - R9223 | <br>**CENTER LOG (H)**<br>Part Number - R9373 |
| 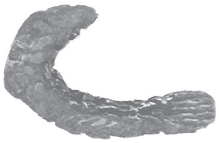 <br>**TOP LEFT LOG (I)**<br>Part Number - R9230 | <br>**TOP CENTER LOG (J)**<br>Part Number - R9231 |
| <br>**TOP RIGHT LOG (K)**<br>Part Number - R9232 | <br>**FRONT CENTER LOG (L)**<br>Part Number - R9224 |
| <br>**FRONT RIGHT LOG (M)**<br>Part Number - R9226 | |

# LOG PLACEMENT (13 LOG SET)

Before you begin: If you are installing logs into the DVX36 or DVX42 model then this fireplace is supplied with a set of 13 ceramic fiber logs. Do not handle these logs with your bare hands. Always wear gloves to prevent skin irritation from ceramic fibers. After handling logs, wash your hands gently with soap and water to remove any traces of fiber.

The positioning of logs is critical to safe and clean operation of this fireplace. Sooting and other problems may result if the logs are not properly and firmly positioned in the fireplace. Please refer to **Figures 63 through 66** and corresponding WARNING, when completing the following log placement steps.

1. Remove front. See Page 66.
2. Remove glass door from firebox.
3. Remove logs from bun.
4. Place Rear Bottom Log (A) on the rear part of the burner over the pilot.

5. Place Rear Top Log (B) on log shelf on burner ensuring pins go into holes on bottom of log.

6. Place Bottom Left Log (C) on far left pin of burner. The "lip" of the log will hang off the side of the burner.

7. Place Bottom Left Center Log (D) on second and third pins from left side of the burner.

8. Place Bottom Right Center Log (E) on fourth and fifth pins from the left side of the burner.

# LOG PLACEMENT (13 LOG SET)

9. Place Bottom Right Log (F) on far right pin on the burner. The "lip" of the log will hang off the side of the burner.

10. Place Front Left Log (G) on (C) Log pin. End of (G) Log will rest on firebox bottom.

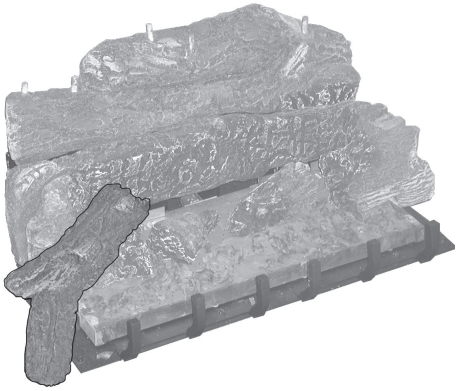

11. Place Center Log (H) on pin on (A) Log with "Y" branches resting on (D) and (E) logs.

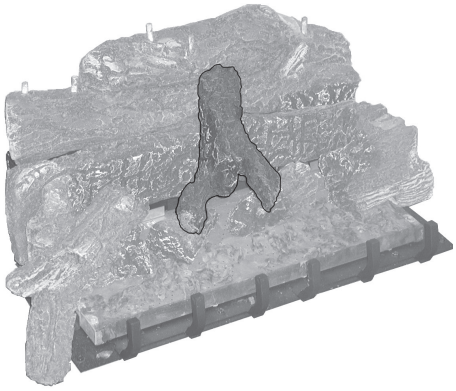

12. Place Top Left Log (I) on two left pins on (B) Log.

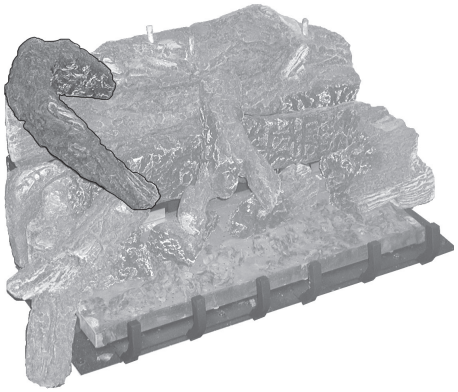

13. Place Top Center Log (J) on third and fourth pins from the left on (B) Log. "Y" branch will rest on (H) Log.

14. Place Top Right Log (K) on far right pin on (B) Log. End of log will rest on (F) Log.

# LOG PLACEMENT (13 LOG SET)

15. Place Front Center Log (L) between third and fourth grates on the burner. The short "Y" branch will point left and the bottom of the "Y" resting on the firebox bottom.

16. Place Front Right Log (M) on the fifth grate from the left with the top resting on (K) Log.

ATTENTION: Do not place decorative rock on logs or on burner. The decorative rock should only be placed on the fireplace floor.

17. After all logs are properly positioned, place small "dime" size pieces of Rockwool lightly across the front round "blueflame" ports. Place the ember material (Rockwool pieces) side by side. Do not stack more than one layer of embers across the burner ports. **See Figure 63.**

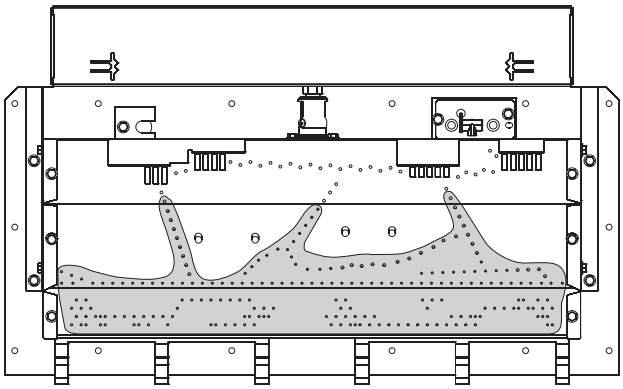

**Figure 63**

18. Replace glass door onto firebox.
19. Secure the two glass frame spring clamps at bottom of firebox.
20. Replace decorative front. See page 66.

WARNING: Failure to position the parts in accordance with this diagram or failure to use only parts specifically approved with this appliance may result in property damage or personal injury.

**Attention: Refer to Log Identification Page 39, and Figures 65 and 66 to order logs.**

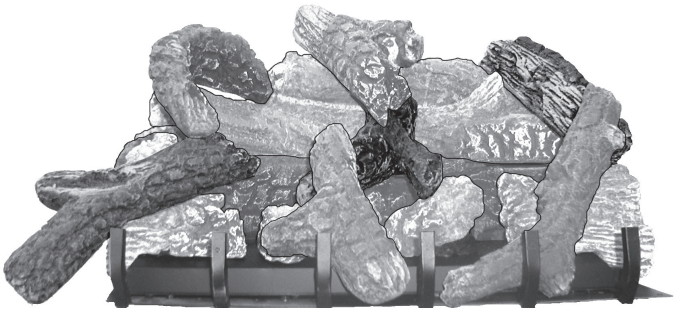

**Figure 64**

**Caution: If a log is broken, cracked or chipped, order a replacement log. See page 43.**

# LOG PLACEMENT (13 LOG SET)

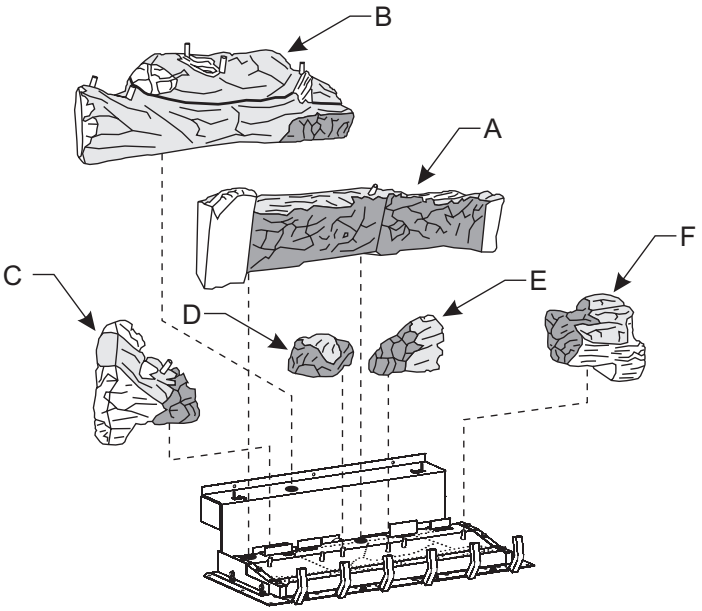


Figure 65

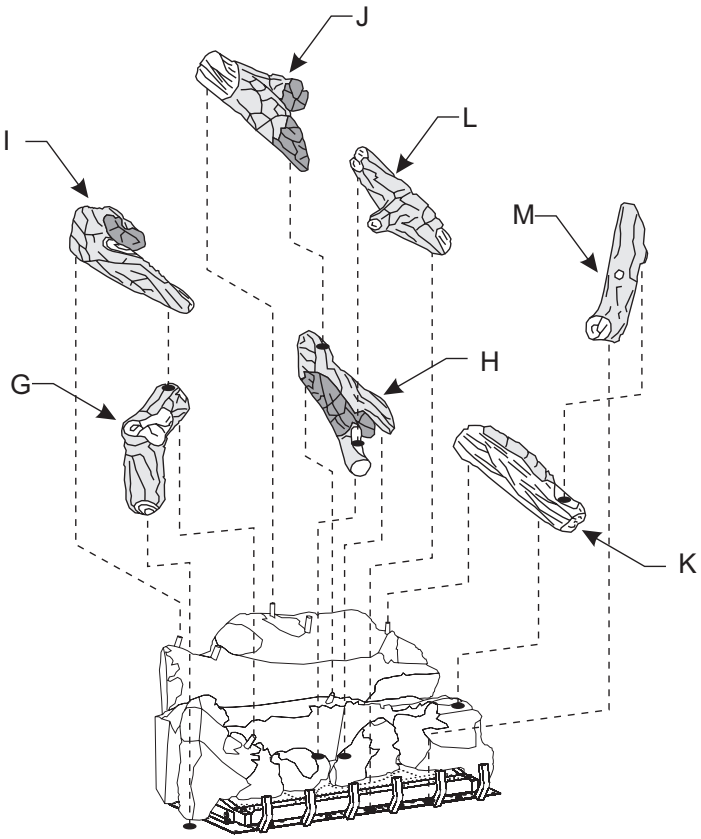


Figure 66

| Log Set Parts List | | |
|---|---|---|
| **Index Letter** | **Part Number** | **Description** |
| A | R9228 | Rear Bottom Log |
| B | R9222 | Rear Top Log |
| C | R9227 | Bottom Left Log |
| D | R9372 | Bottom Left Center Log |
| E | R9225 | Bottom Right Center Log |
| F | R9229 | Bottom Right Log |
| G | R9223 | Front Left Log |
| H | R9373 | Center Log |
| I | R9230 | Top Left Log |
| J | R9231 | Top Center Log |
| K | R9232 | Top Right Log |
| L | R9224 | Front Center Log |
| M | R9226 | Front Right Log |

**750 Millivolt System**

The standing pilot (750 millivolt system) is a continuous burning pilot. The pilot remains ON even when the main burner is OFF.

When you ignite the pilot, the thermopile produces millivolts (electrical current) which energizes the magnet in the gas valve. After 30 seconds to 1 minute time period you can release the gas control knob and the pilot will stay ON. Allow your pilot flame to operate an additional one (1) to two (2) minutes before you turn the gas control knob from the PILOT position to the ON position. This time period allows the millivolts (electrical current) to build-up to a sufficient level allowing the gas control to operate properly.

1. Follow the SAFETY and LIGHTING INSTRUCTIONS for standing pilot controls found in this manual and on labels found in control compartment behind the door assembly.

**CAUTION: During the initial purging and subsequent lightings, never allow the gas valve control knob to remain depressed in the "pilot" position without pushing the piezo ignitor button at least once every second.**

2. During the operating season, leave the control valve knob in the "ON" position. This will allow the pilot flame to remain lit. Turn the burner flame on or off with the fireplace Remote/OFF/ON switch, wall switch or remote controls.

**NOTE:** The gas control valve allows you to increase or decrease the height of the main burner flame. The control valve has a pressure regulator with a knob as shown in **Figure 67.** Rotate the knob clockwise to "HI" to increase the flame height and counterclockwise to "LO" to decrease the flame height.

3. When the operating season is over, turn the Remote/OFF/ON switch to "OFF" and the control valve to "OFF". The system, including the pilot light, will be shut down.

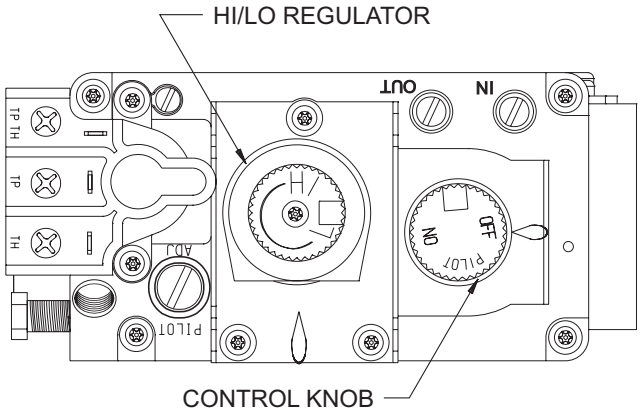


**Figure 67**

The OWNER should carefully read and follow these operating instructions at all times. Lower the door assembly to view the gas controls for the fireplace.

**Initial Lighting**

Upon completing the gas line or turning the gas valve on after it has been in the "OFF" position, a small amount of air will be in the lines. When first lighting the fireplace, it will take a few minutes for the lines to purge themselves of this air. Once the purging is complete, the fireplace will light and operate satisfactorily.

Subsequent lightings of the appliance will not require such purging if the gas valve is not turned to "OFF."

**Pilot Flame (Figure 68)**

The thermopile/thermocouple (standing pilot) tips should be covered with flame.

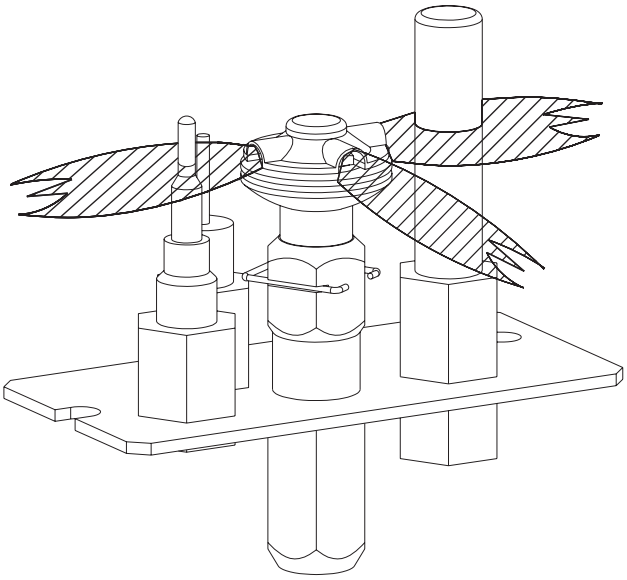

**Figure 68**

**STANDING PILOT OPERATING INSTRUCTIONS**

**Remote/Off/On Switch**

The fireplace is equipped with a Remote/OFF/ON switch. A wire harness is attached to the Remote/OFF/ON switch. The red, black and green (wires) female push-ons attach to the Remote/OFF/ON switch. At the opposite end of the wire harness, the black and green (wires) female push-ons attach to the gas valve. An additional green wire and the red wire, which are stripped and bare, will attach to one of the accessories that can be purchased for use with your fireplace.

**Operation of REMOTE/OFF/ON Switch with no Accessories**

To ignite main burner, turn the control knob on the gas valve from the PILOT position to the ON position. Turn the Remote/OFF/ON switch from the OFF position to the ON position. The additional green wire and red wire, which are stripped and bare are not used.

**Wall Switch, FWS-1**

Connect the green and red, stripped and bare, wires on the REMOTE/OFF/ON switch wire harness to the wall switch. Turn the REMOTE/OFF/ON switch to the Remote position. Pivot the rocker switch on the FWS-1 to the ON position.

**Wall Thermostats (optional)**

TRW - Wireless for Millivolt models
TMV - Reed switch for Millivolt models

**Battery Operated Remote Controls, FRBC, FRBTC, and TRW**

Connect the green and red, stripped and bare, wires on the REMOTE/OFF/ON switch wire harness to the remote receiver that is a component in the remote kit. Turn the REMOTE/OFF/ON switch to the remote position. Follow instructions included with the remote to complete installation.
Note: If batteries fail in the remote, and immediate heat is desired, turn the REMOTE/OFF/ON switch from the REMOTE position to the ON position.

**Electric (120 volt) Operated Remote Control, FREC**

Connect the green and red, stripped and bare, wires on the REMOTE/OFF/ON switch wire harness to the wires on remote receiver that is a component in the FREC. Turn the REMOTE/OFF/ON switch to the REMOTE position. Follow instructions in the FREC to complete installation.

**NOTE:** If electric (120 Volt) fails in FREC, and immediate heat is desired, turn the REMOTE/OFF/ON switch from the REMOTE position to the ON position.

**Installation of Remote Receiver**

Place remote receiver on the floor of fireplace behind the louver as far forward as possible.

**Attention:** The velcro loop and hook are not necessary in this installation but can be used to secure remote receiver.

Refer to remote control installation and operating instructions for more details on remote control.

**Millivolt Control**

The valve regulator controls the burner pressure which should be checked at the pressure test point. Turn captured screw counter clockwise 2 or 3 turns and then place tubing to pressure gauge over test point (Use test point “A” closest to control knob). After taking pressure reading, be sure and turn captured screw clockwise firmly to re-seal. Do not over torque. Check for gas leaks.

Millivolt thermopile is self generating. Gas valve does not require 24 volts or 110 volts.

**Check System Operation**

Millivolt system and all individual components may be checked with a millivolt meter 0-1000 MV range.

It is important to use wire of a gauge proper for the length of the wire:

Recommended Wire Gauges

| Maximum Length | Wire Gauge |
|---|---|
| 1' to 10' | 18 |
| 10' to 25' | 16 |
| 25' to 35' | 14 |

# STANDING PILOT WIRING DIAGRAM

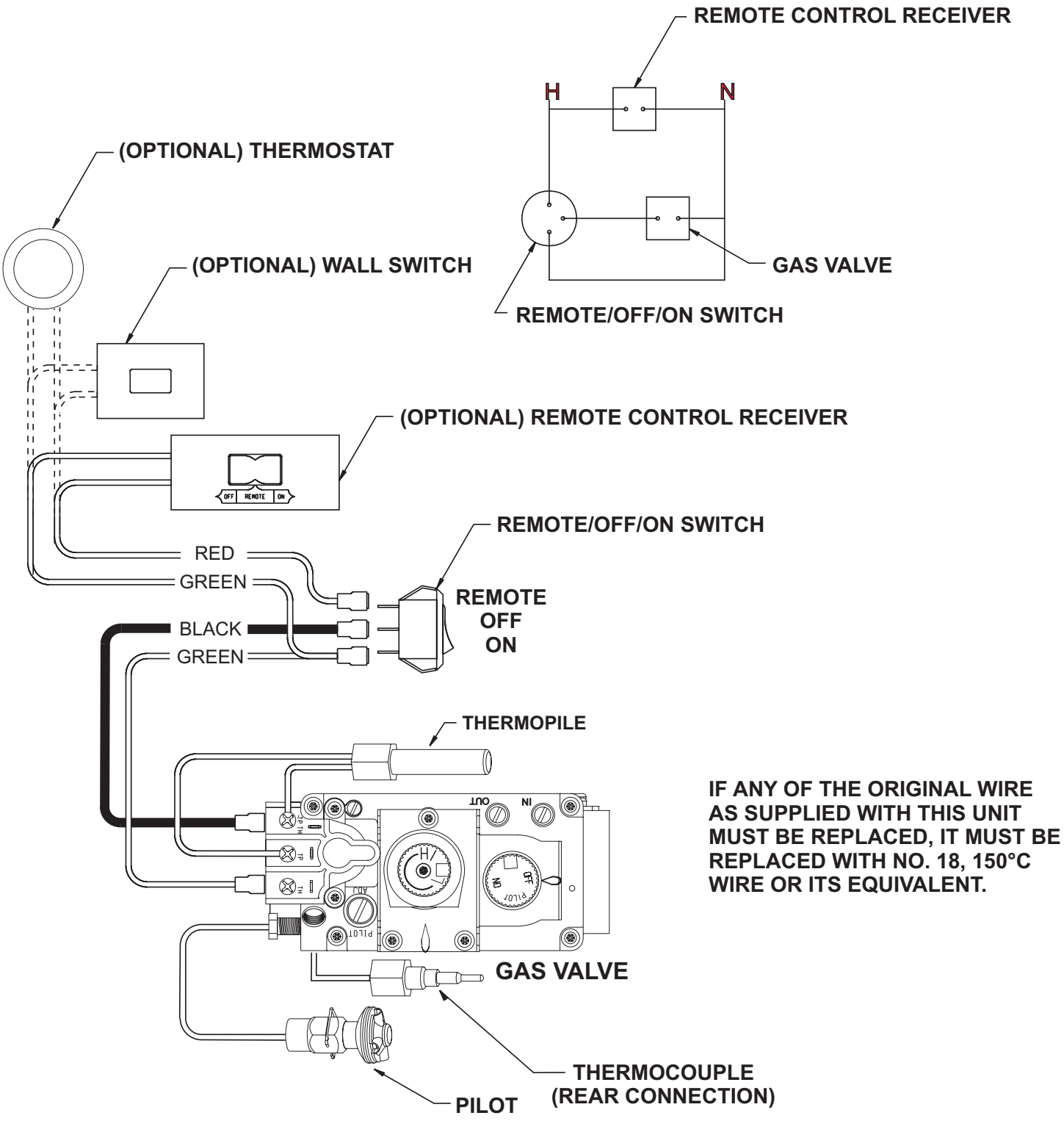


**Figure 69**

# STANDING PILOT LIGHTING INSTRUCTIONS

## FOR YOUR SAFETY, READ BEFORE LIGHTING

WARNING: If you do not follow these instructions exactly, a fire or explosion may result causing property damage, personal injury or loss of life.

A. This appliance has a pilot which must be lighted by hand. When lighting the pilot, follow these instructions exactly.

B. Before lighting smell all around the appliance area for gas. Be sure to smell next to the floor because some gas is heavier than air and will settle on the floor.

What To Do If You Smell Gas

- Do not try to light any appliance.
- Do not touch any electrical switch;
- Do not use any phone in your building.
- Immediately call your gas supplier from a neighbor's phone. Follow the gas supplier's instructions.
- If you cannot reach your gas supplier, call the fire department.

C. Use only your hand to push in or turn the gas control knob. Never use tools. If the knob will not push in or turn by hand, don't try to repair it; call a qualified service technician. Force or attempted repair may result in a fire or explosion.

D. Do not use this appliance if any part has been under water. Immediately call a qualified service technician to inspect the appliance and to replace any part of the control system and any gas control which has been under water.

## LIGHTING INSTRUCTIONS

1. Stop! Read the safety information above.
2. Set REMOTE/OFF/ON switch to OFF.
3. Turn off all electric power to the appliance (if applicable).
4. Lower bottom louver assembly.
5. Push in gas control knob slightly and turn clockwise to "OFF."

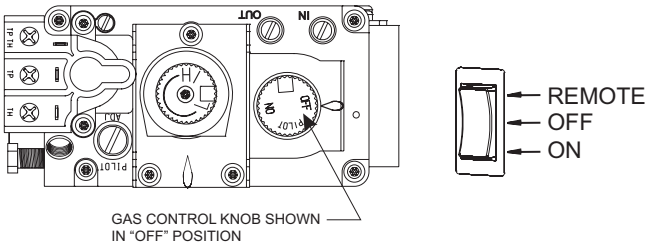


**Note:** Knob cannot be turned from "PILOT" to "OFF" unless knob is pushed in slightly. Do not force.

6. Wait ten (10) minutes to clear out any gas. Then smell for gas, including near the floor. If you then smell gas, STOP! Follow "B" in the safety information above. If you do not smell gas, go to the next step.
7. Find pilot - Follow metal tube from gas control. The pilot is behind the burner on the right side.
8. Turngascontrolknobcounterclockwise to "PILOT."

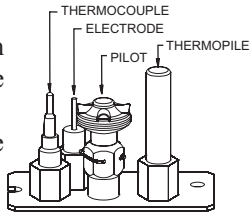


9. Push in control knob all the way and hold in. Repeatedly push the piezo ignitor button until the pilot is lit. Continue to hold the control knob in the for about one (1) minute after the pilot is lit. Release knob, and it will pop back up. Pilot should remain lit. If it goes out, repeat steps 5 through 9.

- If the control knob does not pop up when released, STOP and IMMEDIATELY call a qualified service technician or gas supplier.
- If the pilot will not stay lit after several tries, turn the gas control knob to "OFF" and call your service technician or gas supplier.

10. Turn gas control knob counterclockwise to "ON."
11. Close bottom louver assembly.
12. Turn on all electric power to the appliance (if applicable).
13. Set REMOTE/OFF/ON switch to desired setting.

## TO TURN OFF GAS TO FIREPLACE

1. Set REMOTE/OFF/ON switch to OFF.
2. Turn off all electric power to the appliance if service is to be performed (if applicable).
3. Lower bottom louver assembly.
4. Push in gas control knob slightly and turn clockwise to "OFF." Do not force.
5. Close bottom louver assembly.

# STANDING PILOT TROUBLESHOOTING

**With proper installation and maintenance, your new Direct Vent Gas Fireplace will provide years of trouble-free service. If you do experience a problem, refer to the Trouble Shooting Guide below. This guide will assist a qualified service person in the diagnosis of problems and the corrective action to be taken.**

1. **Spark ignitor will not light pilot after repeated triggering of piezo ignitor button.**
   a. Defective ignitor (no spark electrode).
   —Check for spark at electrode and pilot; if no spark and electrode wire is properly connected, replace ignitor.
   b. No gas or low gas pressure.
   —Check remote shut off valves from fireplace. Usually there is a valve near the main. There can be more than one (1) valve between the fireplace and main.
   —Low pressure can be caused by a variety of situations such as a bent line, too narrow diameter of pipe, or low line pressure. Consult with plumber or gas supplier.
   c. No LP in tank.
   —Check LP (propane) tank. Refill tank.
2. **Pilot will not stay lit after carefully following lighting instructions.**
   a. Defective thermocouple.
   —Check that pilot flame impinges on thermocouple. Clean and/or adjust pilot for maximum flame impingement.
   —Ensure the thermocouple connection at the gas valve is fully inserted and tight (hand tight plus 1/4 turn). Faulty thermocouple if reading is below specified minimum of 15 millivolts.
   —Disconnect the thermocouple from the valve, place one millivolt meter lead wire on the end of the thermocouple and the other millivolt meter lead wire on the thermocouple copper wire. Start the pilot and hold the valve knob in. If the millivolt reading is less than 15 millivolt, replace the thermocouple.
   b. Defective valve.
   —If thermocouple is producing more than 15 millivolts, replace faulty valve.
3. **Pilot burning, no gas to burner, valve knob "ON", REMOTE/OFF/ON switch "ON."**
   a. REMOTE/OFF/ON switch, wall switch, remote control or wires defective.
   —Check REMOTE/OFF/ON switch and wires for proper connections. Place jumper wires across terminal at switch. If burner comes on, replace defective switch. If OK, place jumper wires across switch wires at gas valve-if burner comes on, wires are faulty or connections are bad.
   b. Thermopile may not be generating sufficient millivolts.
   —If the pilot flame is not close enough physically to the thermopile, adjust the pilot flame.
   —Be sure the wire connections from the thermopile at the gas valve terminals are tight and the thermopile is fully inserted into the pilot bracket.
   —Check the thermopile with a millivolt meter. Take the reading at TH-TP & TP terminals of the gas valve. The meter should read 350 millivolts minimum, while holding the valve knob depressed in the pilot position, with the pilot lit, and the REMOTE/OFF/ON switch in the OFF position. Replace the faulty thermopile if the reading is below the specified minimum.
   —With the pilot in the ON position, disconnect the thermopile leads from the valve. Take a reading at the thermopile leads. The reading should be 350 millivolts minimum. Replace the thermopile if the reading is below the minimum.
   c. Defective valve.
   —Turn valve knob to ON. Place REMOTE/OFF/ON switch to ON. Check with millivolt meter at thermopile terminals. Millivolt meter should read greater than 200 millivolts. If the reading is okay and the main burner does not ignite, replace the gas valve.
   d. Plugged main burner orifice.
   —Check main burner orifice for blockage and remove.
4. **Frequent pilot outage problem.**
   a. Pilot flame may be too high or too low, or blowing (high), causing pilot safety to drop out.
   —Clean and adjust flame for maximum flame impingement on the thermocouple. Follow lighting instructions carefully.
5. **The pilot and main burner extinguish while in operation.**
   a. No LP (Propane) in tank.
   Check LP (Propane) tank. Refill fuel tank.
   b. Inner vent pipe leaking exhaust gases back into system.
   —Check for leaks.
   c. Glass too loose, gasket leaks in corners after usage.
   —Be certain glass assembly is installed correctly.
   d. Horizontal vent improperly pitched.
   —The horizontal vent cap should slope down only enough to prevent any water from entering the unit. The maximum downwards slope is 1/4 inch.
   e. Bad thermopile or thermocouple.
   —Replace if necessary.
   f. Improper vent cap installation.
   —Check for proper installation and freedom from debris or blockage.
6. **Glass soots.**
   a. Flame impingement on logs.
   —Check and adjust log position. Contact Empire Comfort Systems, Inc.
   b. Debris around throat of main burner.
   —Inspect the opening at the base of the main burner. It is imperative that NO material be placed in this opening.
7. **Flame burns blue and lifts off main burner.**
   a. Insufficient oxygen being supplied.
   —Check to make sure vent cap is installed properly and free of debris. Make sure that vent system joints are tight and have no leaks.
   —Check to make sure that no material has been placed at the main burner base.

# DIRECT IGNITION WIRING DIAGRAM

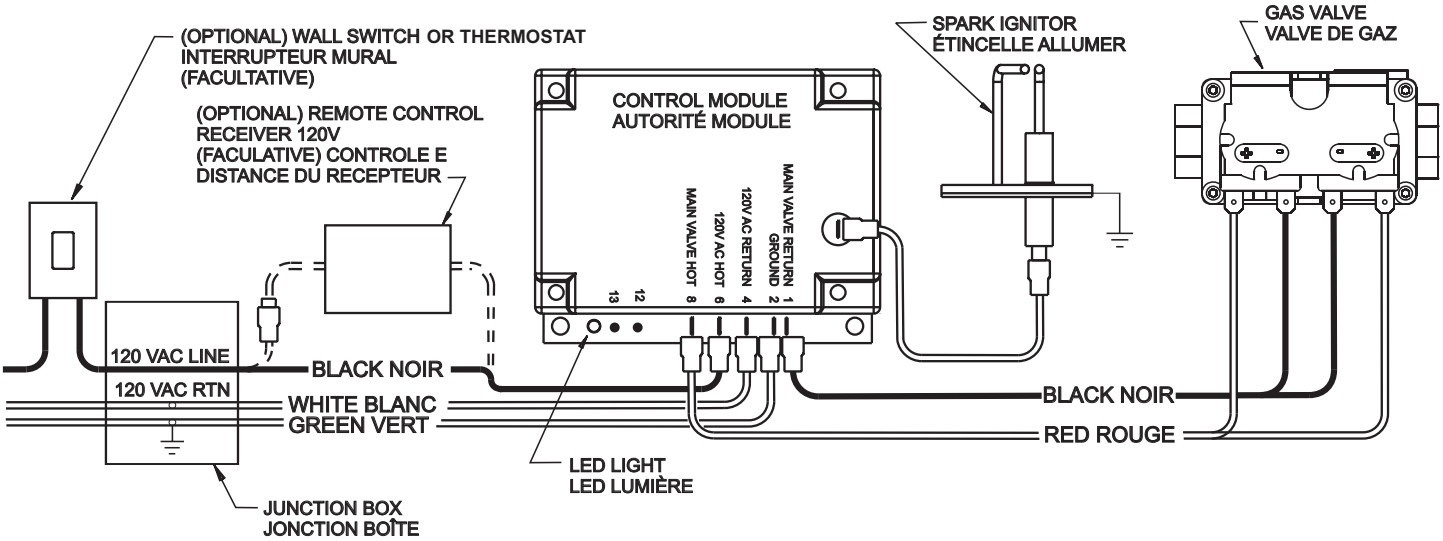


| LED CODES | |
|---|---|
| Steady ON | Normal operation, power ON to control |
| 2 Flashes | 3 unsuccessful ignition trials |
| 3 Flashes | Main burner flame failed 4 times during a single heating cycle |
| 4 Flashes | Interrupt power for 5 seconds to reset control |
| Steady Flash | Flame detected out of sequence |

**Figure 70**

# OPTIONAL REMOTE CONTROL

**Electric (120 volt) Operated Remote Control (FREC)**

1. Disconnect 3-prong power cord from receptacle.
2. Remove wire from 120 VAC hot terminal on control module.
3. Connect female terminal from receiver onto 120 VAC hot terminal on control module.
4. Connect remaining wire from remote control (male terminal) to (female terminal) on power cord removed from control module (step 2).
5. Insert electric remote control power cord plug into the junction box on the right side of fireplace.
6. Connect 3-prong plug into receptacle.

# DIRECT IGNITION LIGHTING INSTRUCTIONS

## FOR YOUR SAFETY READ BEFORE LIGHTING

**WARNING: IF YOU DO NOT FOLLOW THESE INSTRUCTIONS EXACTLY, A FIRE OR EXPLOSION MAY RESULT CAUSING PROPERTY DAMAGE, PERSONAL INJURY, OR LOSS OF LIFE.**

A. BEFORE LIGHTING smell all around the appliance area for gas. Be sure to smell next to the floor because some gas is heavier than air and will settle on the floor.

**WHAT TO DO IF YOU SMELL GAS**

- Do not try to light any appliance
- Do not touch any electrical switch
- Do not use any phone in your building.
- Immediately call your gas supplier from a neighbor's phone.
- Follow the gas supplier's instructions.
- If you can not reach your gas supplier, call the fire department.

B. Use only the wall switch or remote control switch to turn the gas control on/off. Any attempted repairs or adjustments should be performed by a qualified service technician. Applying force or attempted repair may result in a fire or explosion.

C. Do not use this appliance if any part has been under water. Immediately call a qualified service technician to inspect the appliance and to replace any part of the control system and any gas control which has been under water.

## LIGHTING INSTRUCTIONS

1. STOP! Read the safety information above.
2. Set the thermostat, if used, to the lowest setting.
3. Turn off all electric power to the appliance.
4. This appliance is equipped with an ignition device that automatically lights the burner. Do not try to light the burner by hand.
5. Open bottom louver assembly.
6. Turn gas line valve to “ON.”
7. Wait five (5) minutes to clear out any gas. Then smell for gas, including near the floor. If you smell gas, STOP! Follow “A” in the safety information above. If you do not smell gas, go to the next step.
8. Close bottom louver assembly.
9. Turn on all electric power to the appliance.
10. Set thermostat to desired setting (if available).
11. If the appliance will not operate, follow the instructions “TO TURN OFF GAS TO APPLIANCE,” and call your service technician or gas supplier.

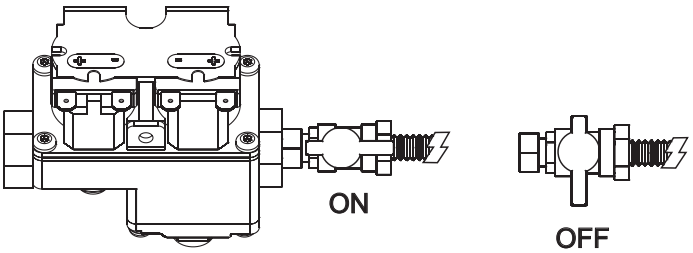


## TO TURN OFF GAS TO APPLIANCE

1. STOP! Read the safety information above.
2. Turn off all electric power to the appliance.
3. Open bottom louver assembly, or open the valve access door.
4. Turn gas line valve to "OFF."
5. Close bottom louver assembly, or close valve access door.

# INITIAL START UP GAS LINE PURGE

**NOTE: UNIT MUST BE PROPERLY GROUNDED FOR ELECTRONIC IGNITION TO FUNCTION.**

On initial installation, or after extended periods where the fireplace has not been used, gas lines may require purging. The installer or qualified service person may use the following purge procedures to prevent the delays that would be caused by waiting for the lockout periods between tries for ignition.

## PURGE PROCEDURE

1. Remove glass door and place away from the fireplace.
2. Turn on gas shut off valve. Follow ignition procedure.
3. If burner does not light after spark sequence has ended, use an insulated jumper wire between terminal locations 12 and 13 for fast reset function.
4. Interrupt power for 5 seconds. The green indicator light will blink 4 times repetitively. Then retry for ignition.
5. Allow time for any raw gas to dissipate and repeat steps 3 and 4 until ignition is achieved.
6. Turn burner off and install glass door frame assembly.
7. Test ignition of burner with glass door in place.

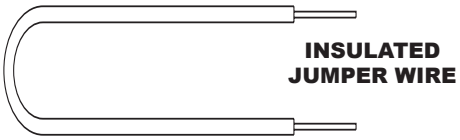


# DIRECT IGNITION TROUBLESHOOTING

With proper installation and maintenance, your new Direct Vent Gas Fireplace will provide years of trouble-free service. If you do experience a problem, refer to the troubleshooting guide below. This guide will assist a qualified service person in the diagnosis of problems and the corrective action to be taken. Refer to this page for initial startup and GAS Line purge instructions.

| SYMPTOM | CHECK | ACTION |
|---|---|---|
| No spark when system is turned to “ON” and reset cycle* has been completed | Check for 120V between black “hot” line at control module and “white” return at module | If 120V not present, check fuse or circuit breaker or repair wiring leading to fireplace. |
| Spark for six (6) seconds at ignitor, but no ignition of burner. | a. Check that gas is turned on and system purged | Turn gas on and/or purge system |
| | b. Check that tips of ignitor are directly above ports on main burner. Spark is between electrodes and not from one electrode to burner. | Position electrodes so tips are directly above burner port ports and about ¼" to 3/8" above burner. |
| | c. Check for 120V at each coil on the gas valve and listen for click, indicating gas valve is opening. | If 120V present, but gas valve does not click, replace gas valve. |
| Spark for six (6) seconds, main burner lights, but goes out when spark stops. | Check for clean ground path between electrode bracket and fireplace chassis. Check wiring to wiring diagram label. Check for broken electrode on high-tension lead attachment to module. | Clean, position according to wiring diagram, and repair defective electric connections. If all electrical connections are clean and correct, replace module. |
| Main burner lights normally and then goes out. | a. Check thermostat if applicable. | Turn thermostat up to call for heat or replace |
| | b. Check high-tension lead and connector for shorts. | Replace spark electrode assembly |
| | c. Refer to installation instructions troubleshooting guide for issues such as venting. | Repair as required. |

# DIRECT IGNITION PROPANE/LP GAS CONVERSION

**The conversion shall be carried out in accordance with the requirements of the provincial authorities having jurisdiction and in accordance with the requirements of the CSA B149.2 installation code (Canada) and with the requirements of the National Fuel Gas Code Z223.1/NFPA 54 (United States).**

**WARNING: This conversion kit shall be installed by a qualified service agency in accordance with the manufacturer's instructions and all applicable codes and requirements of the authority having jurisdiction. If the information in this instruction is not followed exactly, a fire, explosion, or production of carbon monoxide may result causing property damage, personal injury, or loss of life. The qualified service agency is responsible for the proper installation of this kit. The installation is not proper and complete until the operation of the converted appliance is checked as specified in the manufacturer's instructions supplied with the kit.**

**Installer notice:** Using an ink pen, fill out the required information on the conversion label. Remove the backing from label and stick label in a visible position on bottom of fireplace close to gas valve.

**Installer notice:** These instructions must be left with the appliance.

**Instructions for converting your direct ignition fireplace from natural gas to propane/LP gas.**

All direct ignition fireplaces are shipped from the factory equipped to operate on natural gas. To convert the direct ignition fireplace to operate on propane/LP gas, follow the instructions on this page. Please see the appropriate parts list for your model for parts included with the direct ignition fireplace.

Check the items in the kit with the parts list. Notify the supplier of any items that are missing before installing the conversion kit.

1. Turn off the gas supply.
2. Turn off the electrical supply to the appliance if so equipped.
3. Remove top louver and lower bottom louver.
4. Remove glass frame assembly.
5. Remove logs from burner assembly.

**VALVE CONVERSION**

6. Remove plastic cap from regulator fitting. Unscrew fitting using a 11/16" wrench. Turn fitting over so end of fitting marked "LPG" (red) screws into valve. Tighten fitting (snug only). Replace plastic cap.
7. Remove 1/4" screw from air shutter.
8. Located to the right of electrodes is a burner hold-down tab. Using needle-nose pliers, bend burner hold-down tab off the main burner.
9. Remove main burner by pivoting main burner forward as you slide main burner from left to right. Be careful as you remove main burner in order to protect the electrodes from being damaged.
10. Remove air shutter from orifice fitting.
11. Remove natural gas main burner orifice from orifice fitting.
12. Install propane/LP main burner orifice marked 1.65 MM for DVX36 or marked 1.80 MM for DVX42.
    Important: Failure to install the correct orifice will result in unit over-firing that could overheat the appliance and result in a fire.
13. Replace air shutter onto orifice fitting. Air shutter must be threaded and bottomed-out onto orifice fitting.
14. Replace main burner onto burner assembly. Place main burner beneath electrodes, slide main burner from right to left into burner location, and pivot main burner away from you and into air shutter.
15. Set air shutter opening at FULL OPEN. Tighten air shutter in place with 1/4" screw from step 7.
16. Using needle-nose pliers, bend burner hold-down tab over main burner.
17. Refer to log placement, pages 39 to 43 to place logs onto burner assembly.
18. Loosen screw and attach a manometer or pressure gauge to the outlet pressure tap of the control valve.
19. Turn on the gas supply. Turn on the electrical supply to the appliance. Check for gas leaks using soap and water solution or leak detection solution. Bubbles indicate a leak that MUST be corrected. Do not use an open flame to test for gas leaks.
20. Check the air shutter opening. See chart and illustration below.
21. Relight the main burners and verify proper burner ignition and operation.
22. With the main burner burning, read the pressure on the manometer or pressure gauge. The pressure on the gauge should read between 9.8" and 10.2" w.c.
23. Turn off the gas supply. Turn off the electrical supply to the appliance.
24. Remove the manometer or pressure gauge. Tighten the screw in the pressure tap.
25. Turn on the gas supply. Turn on the electrical supply to the appliance.
26. Immediately test all gas line connections and the control valve for gas leaks using a soap and water solution or other gas detection solution. Bubbles indicate a leak that MUST be corrected. Do not use an open flame to test for gas leaks.
27. Using a ball point pen, fill out the conversion label that is supplied with the conversion kit. Place the conversion label adjacent to the rating plate.
28. Replace glass frame assembly.
29. Reinstall top and bottom louvers.
30. Test operation of fireplace once again. Allow the fireplace to operate for at least 10 minutes and check flame coloration. Flames on rear of burner should be yellow without any orange-colored tip. Minor adjustment of the air shutter may be necessary to "tune in" the proper flame color.

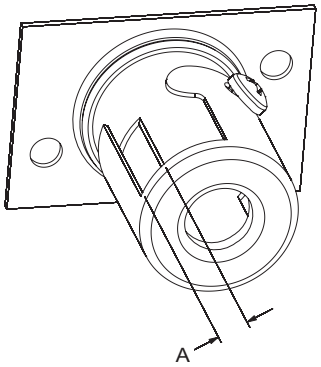


| Model | AIR SHUTTER SETTINGS | BURNER ORIFICE |
|---|---|---|
| | Opening "A" | Propane/LP Orifice |
| DVX36 | FULL OPEN | 1.65 MM |
| DVX42 | FULL OPEN | 1.80 MM |

**Figure 71**

**Maxitrol Valve Conversion**

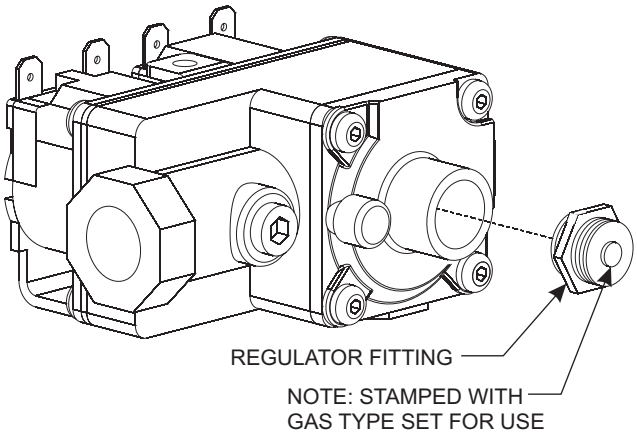


**Figure 72**

# INTERMITTENT PILOT OPERATING INSTRUCTIONS

The intermittent pilot (120/24 volt system) is ON when the main burner is ON. When the main burner is OFF the intermittent pilot is OFF.

The pilot flame should envelop 3/8 to 1/2 inch (10 to 13 mm) of the tip of the flame rod.

To adjust:

1. Remove the pilot adjustment cover screw.
2. Turn the inner adjustment screw clockwise to decrease or counterclockwise to increase pilot flame. Pilot adjustment is shipped at full flow rate. Turn the inner adjustment screw clockwise if the inlet pressure is too high.
3. Replace the cover screw after the adjustment to prevent gas leakage.

Label all wires prior to disconnection when servicing controls. Wiring errors can cause improper and dangerous operation. Verify proper operation after servicing.

Provided on the intermittent pilot wiring harness are two (2) stripped and bare wires that are labeled THERMOSTAT. The wires will be used for attachment of 24 volt thermostat, optional FWS-1 wall switch or will attach into the receiver on an optional FRBC, FRBTC or FREC remote control.

**Installation of Remote Receiver**

Place remote receiver on the floor of fireplace behind the louver as far forward as possible.

**Attention:** The Velcro loop and hook are not necessary in this installation but can be used to secure remote receiver.

# INTERMITTENT PILOT WIRING DIAGRAM

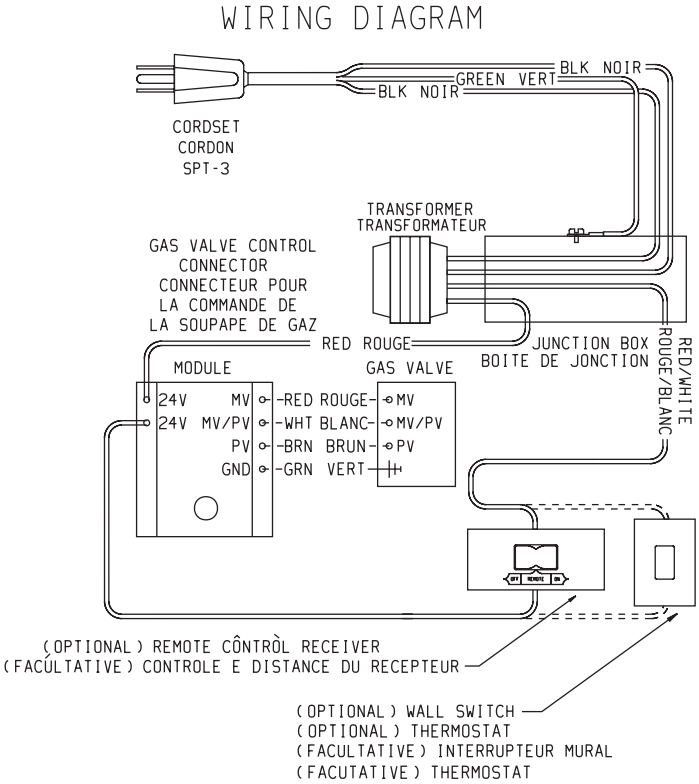


**Figure 73**

**ELECTRICAL CONNECTION (Figure 73)**

The DVX Intermittent Pilot Models with optional fan requires 120 VAC electrical hookup to the electrical box (installed).

The appliance, when installed, must be electrically grounded in accordance with local codes or, in the absence of local codes, with the *National Electrical Code, ANSI/NFPA 70*, if an external electrical source is utilized.

CAUTION: ALL WIRING SHOULD BE DONE BY A QUALIFIED ELECTRICIAN AND SHALL BE IN COMPLIANCE WITH ALL LOCAL, CITY AND STATE BUILDING CODES. BEFORE MAKING THE ELECTRICAL CONNECTION, MAKE SURE THAT MAIN POWER SUPPLY IS DISCONNECTED. THE APPLIANCE, WHEN INSTALLED, MUST BE ELECTRICALLY GROUNDED IN ACCORDANCE WITH LOCAL CODES OR, IN THE ABSENCE OF LOCAL CODES, WITH THE NATIONAL ELECTRICAL CODE ANSI/NFPA 70 (LATEST EDITION).

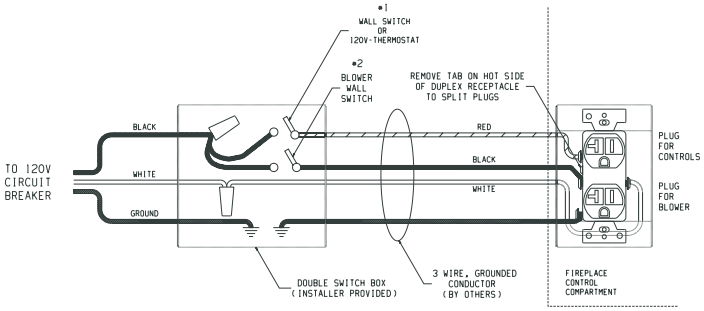


DUAL SWITCH ELECTRICAL WIRING TO FIREPLACE RECEPTACLE

**Figure 74**

1. To wire Junction Box Receptacle, remove the tab on the side of the receptacle (hot side) to split receptacle. This will be required to separate blower and valve circuits.
2. Power for switched and live sides of Duplex Receptacle must come from the same power source. (One circuit breaker on main panel must switch all power off.)
3. From the wall box to the fireplace a 3-wire conductor with ground is recommended, however (2) two-wire conductors with grounds may be used in place of a 3-wire conductor with a ground if the black wires from the thermostat and blower switch are identified.
4. Two wall switches, or a wall switch and thermostat may be used to activate the two receptacle plugs independently.

# INTERMITTENT PILOT LIGHTING INSTRUCTIONS

## FOR YOUR SAFETY READ BEFORE LIGHTING

**WARNING: If you do not follow these instructions exactly, a fire or explosion may result causing property damage, personal injury or loss of life.**

**A. This appliance is equipped with an ignition device which automatically lights the pilot. Do not try to light the pilot by hand.**

**B. BEFORE LIGHTING smell all around the appliance area for gas. Be sure to smell next to the floor because some gas is heavier than air and will settle on the floor.**

**WHAT TO DO IF YOU SMELL GAS**

- **Do not try to light any appliance.**
- **Do not touch any electrical switch;**
- **Do not use any phone in your building.**
- **Immediately call your gas supplier from a neighbor's phone. Follow the gas supplier's instructions.**
- **If you cannot reach your gas supplier, call the fire department.**

**C. Use only your hand to push in or turn the gas control knob. Never use tools. If the knob will not push in or turn by hand, don't try to repair it; call a qualified service technician. Force or attempted repair may result in a fire or explosion.**

**D. Do not use this appliance if any part has been under water. Immediately call a qualified service technician to inspect the appliance and to replace any part of the control system and any gas control which has been under water.**

## LIGHTING INSTRUCTIONS

1. **STOP! Read the safety information above.**
2. **Set the thermostat to lowest setting.**
3. **Turn off all electric power to the appliance.**
4. **This appliance is equipped with an ignition device which automatically lights the pilot. Do not try to light the pilot by hand.**

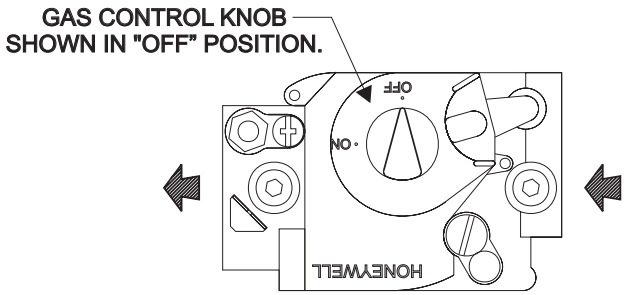


5. **Lower louver front assembly.**
6. **Turn gas control knob clockwise to "OFF."**
7. **Wait ten (10) minutes to clear out any gas. Then smell for gas, including near the floor. If you smell gas, STOP! Follow "B" in the safety information above. If you don't smell gas, go to the next step.**
8. **Turn gas control knob counterclockwise to "ON".**
9. **Close louver front assembly.**
10. **Turn on all electric power to the appliance.**
11. **Set thermostat to desired setting.**
12. **If the appliance will not operate, follow the instructions "TO TURN OFF GAS TO APPLIANCE" and call your service technician or gas supplier.**

## TO TURN OFF GAS TO APPLIANCE

1. Set the thermostat to lowest setting. (if applicable.)
2. Turn off all electric power to the appliance if service is to be performed.
3. Open bottom louver assembly.
4. Turn gas control knob clockwise to "OFF". Do not force.
5. Close bottom louver assembly.

# INTERMITTENT PILOT TROUBLESHOOTING

CALL SERVICEMAN

**GENERAL:** All fireplaces have been fire-tested to check for proper operation. This includes, main burner flame, pilot flame, fan operation, fan control, limit control and automatic valve operation. If the fireplace fails to function on initial installation, it is advisable to re-check the following:

1. 115 volts to the junction box.
2. Inlet gas pressure.
3. The 24 volt system.
4. Type of gas being used and that shown on the rating label.

The Service Department at Empire Comfort Systems, Inc. may be contacted to assist in servicing furnace.

**Servicing the Pilot and Main Burners, Pilot Orifice, and Main Burner Orifices:** Disconnect the gas supply at the inlet to the control valve. Then remove the burner door to which the above components are attached.

S8600H INTERMITTENT IGNITION MODULE SPECIFICATIONS

Lockout timing is 90 seconds. Ignition timing is until pilot lights or lockout occurs.

Module shuts down and cuts power to gas control on flame failure. Gas control closes to provide 100 percent lockout on flame failure. Manual reset required.

ELECTRICAL RATINGS:

Voltage and frequency: 20.5 to 28.5V (24V nom.) 60 Hz.
Current rating: 0.2 A.
Valve contact ratings (at 24 Vac):

| | Run | Inrush |
|---|---|---|
| Pilot | 1.0 A | 10.0 A |
| Main | 1.0 A | 10.0 A |

SPARK GENERATOR OUTPUT: 13kV peak at 25 pf load.

THERMOSTAT ANTICIPATOR SETTING: 0.2 A plus pilot valve rating plus main valve rating.

THERMOSTAT COMPATIBILITY: Standard models compatible with all open-close switch type 24 Vac thermostats capable of supplying rated voltage and current to the module.

AMBIENT TEMPERATURE RATING: Minus 40 F to plus 175 F (minus 40 C to plus 79 C).

RELATIVE HUMIDITY RATING: 5 to 90 percent RH at 95 F.

FLAME FAILURE RESPONSE TIME: 0.8 seconds at 1.0 uA flame current.

FLAME CURRENT: 1 uA, min.

**CHECKOUT**

Check out the gas control system:

1. At initial installation of the appliance.
2. As part of regular maintenance procedures.
3. As the first step in troubleshooting.
4. Any time work is done on the system.

STEP 1: Perform Visual Inspection.

A. With power off, make sure all wiring connections are clean and tight.
B. Turn on power to appliance and ignition module.
C. Open manual shutoff valves in the gas line to the appliance.
D. Do gas leak test ahead of gas control if piping has been disturbed.
GAS LEAK TEST: Paint pipe joints with rich soap and water solution. Bubbles indicate gas leak. Tighten joints to stop leak.

STEP 2: Review Normal Operating Sequence and Module Specifications.

STEP 3: Reset the Module.

A. Turn the thermostat to its lowest setting.
B. Wait one minute.
As you do Steps 4 and 5, watch for points where operation deviates from normal. Refer to Troubleshooting Chart to correct problem.

STEP 4: Check Safety Lockout Operation.

A. Turn gas supply off.
B. Set thermostat above room temperature to call for heat.
C. Watch for spark at pilot burner.
D. Time length of spark operation. Maximum spark time is 90 seconds.
E. Open manual gas cock and make sure no gas is flowing to pilot or main burner.
F. Set thermostat below room temperature and wait one minute before continuing.

STEP 5: Check Normal Operation.

A. Set thermostat above room temperature to call for heat.
B. Make sure pilot lights smoothly when gas reaches the pilot burner.
C. Make sure main burner lights smoothly without flashback. Make sure burner operates smoothly without floating or lifting.
D. If gas line has been disturbed, complete gas leak test.
GAS LEAK TEST: Paint gas control gasket edges and all pipe connections downstream of gas control, including pilot tubing connections, with rich soap and water solution. Bubbles indicate gas leaks. Tighten joints and screws or replace component to stop gas leak.
E. Turn thermostat below room temperature. Make sure main burner and pilot flames go out.

**OPERATION**

Module operation can be conveniently divided into two phases for S8600H. The phases are trial for ignition and main burner operation.

**TRIAL FOR IGNITION**

**Pilot Ignition**

Following call for heat (system start on S8600H), the module energizes the first main valve operator. The first main valve opens, which allows gas to flow to the pilot burner. At the same time, the electronic spark generator in the module produces a 13,000 volt spark pulse output (at 25 pf load). The voltage generates a spark at the igniter-sensor that lights the pilot.

If the pilot does not light, or the pilot flame current is not at least 1.0 uA and steady, the module will not energize the second main valve and the main burner will not light.

**Safety Lockout**

S8600H provides 100 percent shutoff, or safety lockout. A timer starts timing the moment the trial for ignition starts. Ignition spark continues only until the timed trial for ignition period ends. Then the module goes into safety lockout. Lockout de-energizes the first main valve operator and closes the first main valve in the gas control, stopping pilot gas flow. The control system must be reset by setting the thermostat below room temperature for one minute or by turning off power to the module for one minute.

**Main Burner Operation**

When the pilot flame is established, a flame rectification circuit is completed between the sensor and burner ground. The flame sensing circuit in the module detects the flame current, shuts off the spark generator and energizes the second main valve operator. The second main valve opens and gas flows to the main burner, where it is ignited by the pilot burner. The flame current also holds the safety lockout timer in the reset (normal) operating condition.

When the call for heat ends, both main valve operators are de-energized, and both main valves in the gas control close.

**CAUTION:** Label all wires prior to disconnection when servicing controls. Wiring errors can cause improper and dangerous operation. Verify proper operation after servicing.

S8600H NORMAL OPERATING SEQUENCE

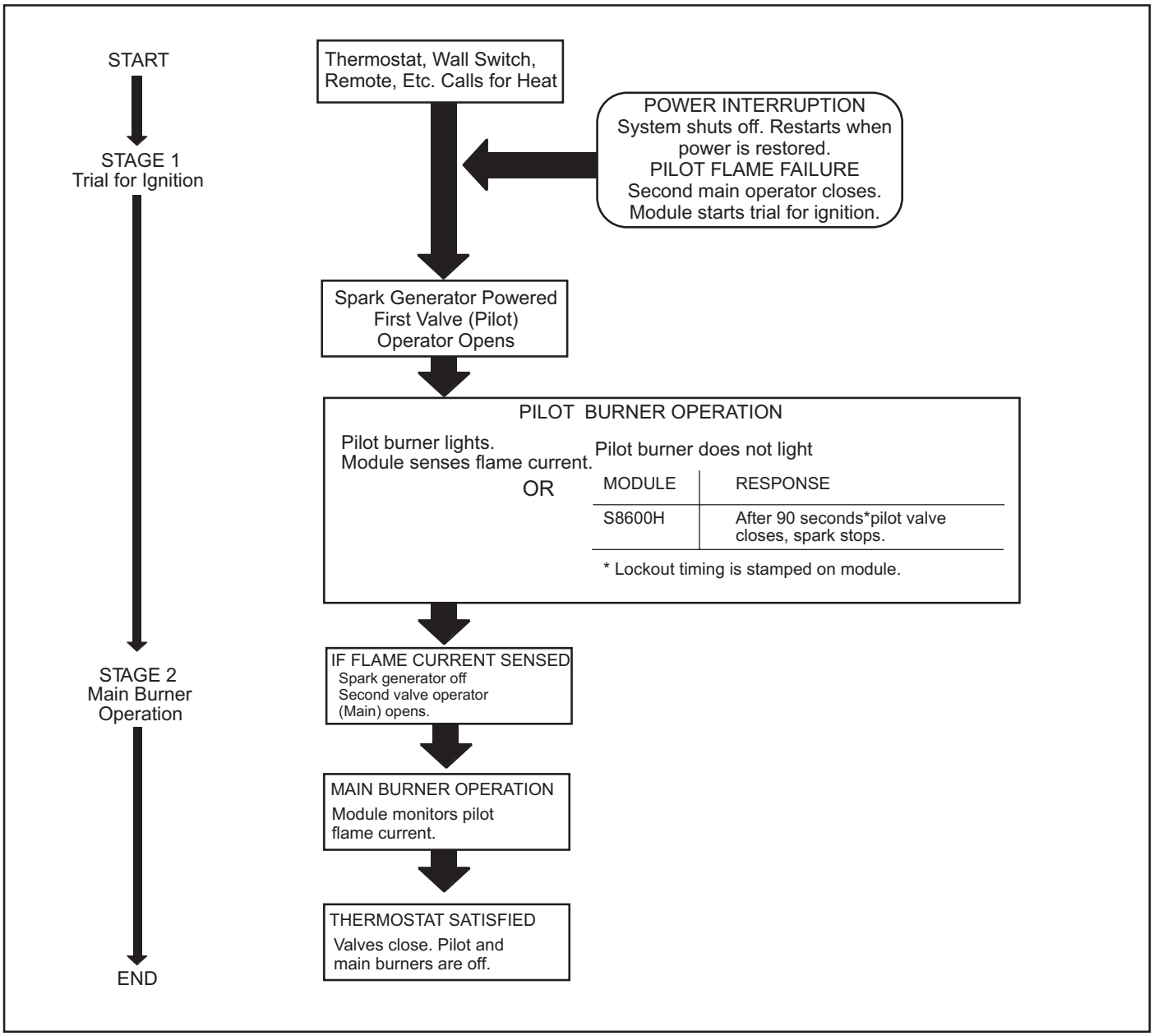

# INTERMITTENT PILOT TROUBLESHOOTING (continued)

**Important**

1. The following service procedures are provided as a general guide.
2. Meter readings between gas control and ignition module must be taken within the trial for ignition period. Once the ignition module locks out, the system must be reset by setting the thermostat down for at least one minute before continuing.
3. If any component does not function properly, make sure it is correctly installed and wired before replacing it.
4. The ignition module cannot be repaired. If it malfunctions, it must be replaced.
5. Only trained, experienced service technicians should service intermittent pilot systems.

Perform the **CHECKOUT** steps on page 56 as the first step in troubleshooting. Then check **TROUBLESHOOTING GUIDE** to pinpoint the cause of the problem. If troubleshooting indicates an ignition problem, see **Ignition System Checks** below to isolate and correct the problem.

Following troubleshooting, perform the **CHECKOUT** procedure (page 56) again to be sure system is operating normally.

**Ignition System Checks**

Step 1: Check ignition cable.

Make sure:

A. Ignition cable does not touch any metal surfaces.
B. Ignition cable is no more than 36 inches long.
C. Connections to the ignition module and to the igniter-sensor are clean and tight.
D. Ignition cable provides good electrical continuity.

Step 2: Check ignition system grounding.
*Nuisance shutdowns are often caused by a poor or erratic ground.*

A. A common ground, usually supplied by the pilot burner bracket, is required for the module and the pilot burner/igniter sensor.
   - Check for good metal-to-metal contact between the pilot burner bracket and the main burner.
   - Check the ground lead from GND (BURNER) terminal on the module to the pilot burner. Make sure connections are clean and tight. If the wire is damaged or deteriorated, replace it with No. 14-18 gauge, moisture-resistant, thermoplastic insulated wire with 105 C (221 F) minimum rating.
     - If flame rod or bracket are bent out of position, restore to correct position.
     - Replace pilot burner/igniter sensor if insulator is cracked.

Step 3: Check spark ignition circuit. *You will need a short jumper wire made from ignition cable or other heavily insulated wire.*

A. Close the manual gas valve.
B. Disconnect the ignition cable at the SPARK terminal on the module.

**WARNING**

**When performing the following steps, do not touch stripped end of jumper or SPARK terminal. The ignition circuit generates 13,000 volts at 25 pf load and electrical shock can result.**

C. Energize the module and immediately touch one end of the jumper firmly to the GND terminal on the module. Move the free end of the jumper slowly toward the SPARK terminal until a spark is established.
D. Pull the jumper slowly away from the terminal and note the length of the gap when sparking stops. Check table below.

| ARC LENGTH | ACTION |
|---|---|
| No arc or arc less than 1/8 inch. | Check external fuse, if provided.<br>Verify power at module input terminal.<br>Replace module if fuse and power okay. |
| Arc 1/8 inch or longer. | Voltage output is okay. |

Step 4: Check pilot flame current.

A. Turn off furnace at thermostat.
B. Disconnect main valve wire from the TH or MV terminal on the gas control.
C. Disconnect ground wire from GND (BURNER) terminal at module.
D. Connect a meter (dc microamp scale) in series with the ground lead.
   - Disconnect ground lead from GND terminal on ignition module.
   - Connect the black (negative) meter lead to the ignition module GND (BURNER) terminal.
   - Connect the red (positive) meter lead to the free end of the ground lead.
E. Set thermostat to call for heat. The spark will light the pilot but the main burner will not light because the main valve actuator is disconnected.
F. Read the meter. The flame sensor current must be steady and at least 1.0 uA.
G. If the reading is less than the minimum or unsteady,
   - Make sure pilot flame envelopes 3/8 to 1/2 inch of the flame rod.
   - If necessary, adjust pilot flame by turning the pilot adjustment screw on the gas control clockwise to decrease or counter-clockwise to increase pilot flame. Following adjustment, always replace pilot adjustment cover screw and tighten firmly to assure proper gas control operation.
   - Check for cracked ceramic insulator, which can cause short to ground, and replace igniter-sensor if necessary.
   - Make sure electrical connections are clean and tight. Replace damaged wire with moisture-resistant No. 18 wire rated for continuous duty up to 105 C (221 F).
H. Remove meter and reconnect all wires. Return system to normal operation before leaving job.

# INTERMITTENT PILOT TROUBLESHOOTING (continued)

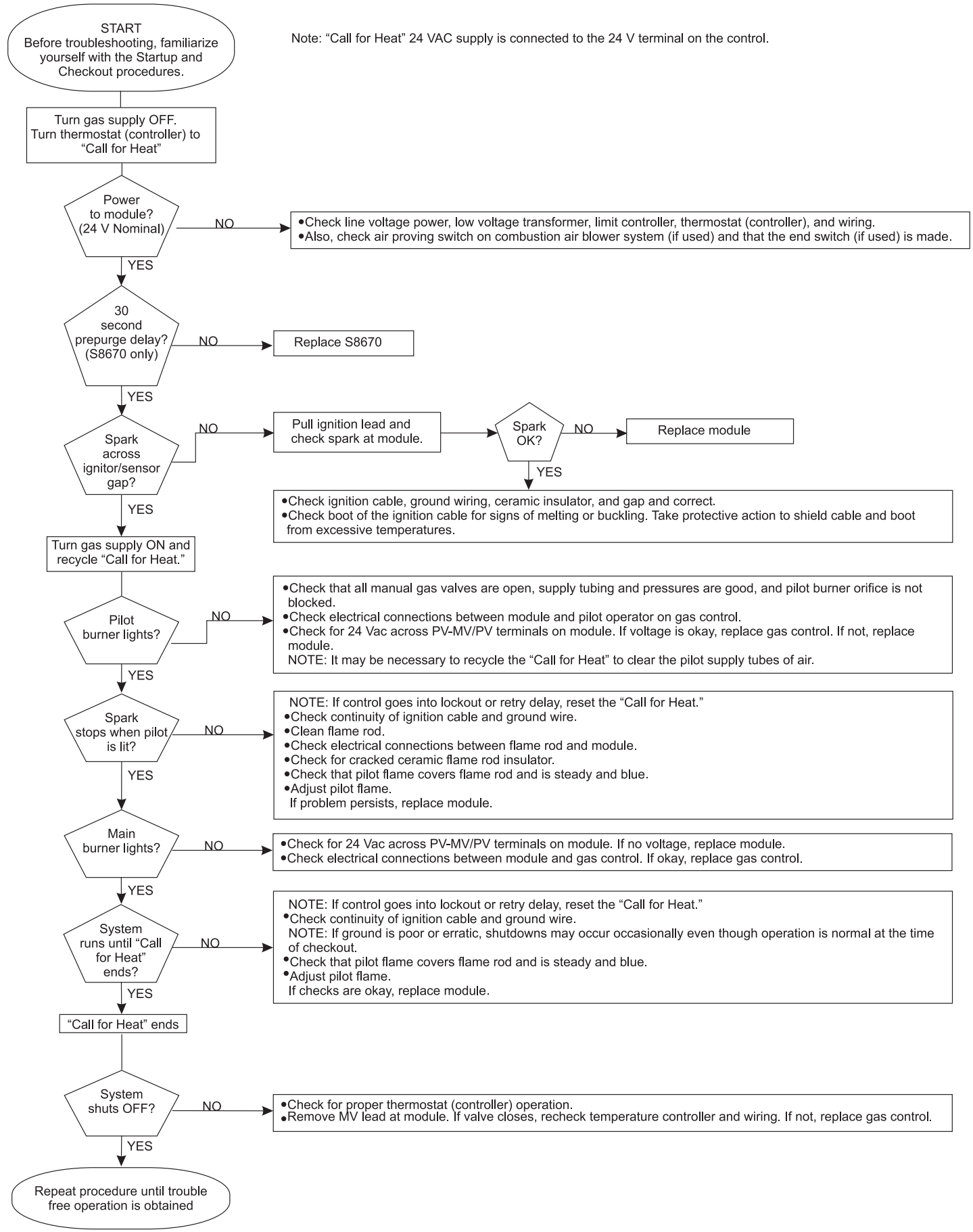

# INTERMITTENT PILOT TROUBLESHOOTING (continued)

## Green LED Status Codes

| Green LED Flash Code (X + Y)[a] | Indicates | Next System Action | Recommended Service Action |
|---|---|---|---|
| OFF | No "Call for Heat" | Not applicable | None |
| Flash Fast | Startup-Flame sense calibration | Not applicable | None |
| Heart Beat | Normal operation | Not applicable | None |
| 3 | Recycle<br>- Flame failed during run | Initiate new trial for ignition. Flash code will remain through the ignition trial until flame is proved. | If system fails to light on next trial for ignition, check gas supply, pilot burner, flame sense wiring, contamination of flame rod, burner ground connection. |
| 4 | Flame sensed out of sequence | If situation self corrects within 10 seconds, control returns to normal sequence. If flame out of sequence remains longer than 10 seconds, control goes to Flash code 6 + 4 (see below). | Check for pilot flame. Replace gas valve if pilot flame present. If no pilot flame, cycle "Call for Heat." If error repeats, replace control. |
| 7 | Flame sense leakage to ground | Control remains in wait mode. When the fault corrects, control resumes normal operation after a one minute delay. | Check flame sense lead wire for damage or shorting. Check that flame rod is in proper position.<br>Check flame rod ceramic for cracks, damage or tracking. |
| 8 | Low secondary voltage supply - below 15.5 Vac) | Control remains in wait mode. When the fault corrects, control resumes normal operation after a one minute delay. | Check transformer and AC line for proper input voltage to the control. Check with full system load on the transformer. |
| 6 + 2 | Failed trial for ignition resulting in lockout | Remain in lockout until "Call for Heat" is cycled. | Check gas supply, pilot burner, spark and flame sense wiring, flame rod contaminated or out of position, burner ground connection. |
| 6 + 3 | More than 5 flame failures during run on the same "Call for Heat" resulting in lockout | Remain in lockout until "Call for Heat" is cycled. | Check gas supply, pilot burner, flame sense wiring, contamination of flame rod, burner ground connection. |
| 6 + 4 | Flame sensed out of sequence - longer than 10 seconds | Control waits until flame is no longer sensed and then goes to soft lockout. Flash code continues. Control auto resets from soft lockout after one hour. | Check for pilot flame. Replace gas valve if pilot flame present. If no pilot flame, cycle "Call for Heat." If error repeats, replace control. |
| ON | Soft lockout due to error detected during self check sequences | Control auto resets from soft lockout after one hour. | Reset by cycling "Call for Heat." If error repeats, replace the control. |

[a]Flash Code Descriptions:

- Flash Fast: Rapid blinking
- Heartbeat: Constant 1/2 second bright 1/2 second dim cycles
- A single flash code number signifies that the LED flashes X times at 2Hz, remains off for two seconds, and then repeats the sequence.
- X + Y flash codes signify that the LED flashes X times at 2Hz, remains off for two seconds, flashes Y times at 2Hz, remains off for three seconds, and then repeats the sequence.

**RF VALVE OPERATION (AF-4040 Electronic Gas Valve system only)**

Please refer to the separate instructions for detailed operation and programming of the Multi-function Remote Control.

The AF-4040 Electronic Gas Control Valve features a Remote controlled High/Low Variable - 6 Volt DC Motor Drive. This gas control uses a spark to pilot burner assembly. For use with Propane or natural gas (pre-set at the factory).

This gas control system includes the items identified in Figure 75.

**SPECIAL FEATURES ON THE CONTROL MODULE**

The Control Module has two special pilot mode features built into the system.

**CONTINUOUS PILOT FEATURE:** This allows the user to change from a spark to pilot system to a standing pilot system.

1. There is a switch located on the right side of the Control Module (#4) that reads CONTINUOUS PILOT ON/OFF. This switch will allow the user to select the pilot mode of operation.
2. When the continuous pilot switch is in the OFF position and the appliance turned ON, the pilot will spark and light, then the main burner will light as well. When the appliance is turned OFF, the pilot and main burner will shut OFF.
3. When the continuous pilot switch is in the ON position and the appliance is turned ON, the pilot will spark and light. Then when the appliance is turned OFF the pilot will remain ON, but the main burner will shut OFF.
   Note: The Continuous pilot mode setting is generally recommended on Direct Vent appliances during cold climate seasons to help keep the firebox warm.

**REMOTE CONTROL FEATURE:** The Control Module has a built in remote control receiver which allows the user to program the hand held remote transmitter.

1. There is a switch located on the right side of the Control Module that reads REMOTE/OFF.
2. When the remote/off switch is in the OFF position the appliance will operate from an appliance mounted rocker switch (#3) or optional wall switch connected to the two (2) BROWN wires on the Control Module.
3. When the remote/off switch is in the REMOTE position the appliance will operate from the Remote Control transmitter.

The Control Module must be programmed to the Remote Control.

1. To program, located the learn button on the left side of the Control Module Note: Press and release the learn button. There will be a beep sound from the Control Module, then press any key on the remote transmitter. Once the internal receiver accepts the transmitter code there will be a series of confirming beeps.
2. The remote system is ready for use. Please refer to the separate Mult-function Remote Control Instruction manual for programming and detailed operational information.

**POWER SUPPLY SYSTEM**

The Gas Control system is powered by a standard 110 volt AC through a 6.0 volt DC adaptor. The AC adaptor is connected to the Control Module with two 1/4” female terminals.

This control system also includes a Battery Back-up pack that allows the Gas Control system only to operate in the event of a power outage.

**NOTE:** The Accent Light and/or Blower features will not operate during a power outage.

**NOTE:** All Batteries should be replaced at least once each year, preferably at the beginning of the heating season.

**CAUTION:** Fire or explosion hazard. Can cause property damage, sever injury or death.

Do not attempt to take apart the gas control or to clean it. Improper assembly and cleaning can cause unreliable operation.

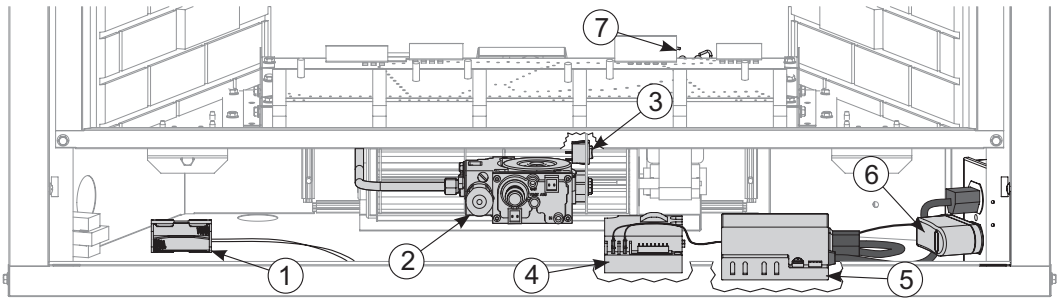


| Index No. | Part No. | Description |
|---|---|---|
| 1 | R10418 | Battery Back-up |
| 2 | R10415 | AF Valve, RF |
| 3 | R2522 | Off/On Switch |
| 4 | R10417 | AF Control Module |
| 5 | R10416 | AF Extension Module |
| 6 | R10419 | AC Adapter |
| 7 | R10423 | Pilot Assembly - Nat |
| | R10424 | Pilot Assembly - LP |

**Figure 75**

# RF MAINTENANCE INSTRUCTIONS

**MAINTENANCE**

Maintenance frequency must be determined individually for each application. Some considerations are:

- Exposure to water, dirt, chemicals and heat can damage the gas control and shut down the control system.
- Cycling frequency. Appliances that may cycle 20,000 times annually should be checked monthly.
- Intermittent use. Appliances that are used seasonally should be checked before shutdown and again before the next use.
- Dusty, wet or corrosive environment. Because these environments can cause the gas control to deteriorate more rapidly, the system should be checked more often.
- Any control should be replaced if it does not perform properly on checkout or service. In addition, replace any module if it is wet or looks like it has been wet.

**SERVICE**

Do not disassemble the gas control; it contains non-replaceable components. Attempted disassembly or repair can damage the control.

Exactly follow the warnings and the lighting instructions.

1. Before lighting, smell around the appliance area for gas. If the appliance uses LP (bottled) gas, be sure to smell next to the floor because LP gas is heavier than air. If you smell gas, immediately shut off the manual valve in the gas piping to the appliance or on LP at the tank. Do not try to light any appliance. Do not touch any electrical switch or use the phone. Leave the building and call your gas supplier. If your gas supplier cannot be reached, call the fire department.
2. The gas control must be replaced if it has been flooded with water. Call a qualified service technician.
3. The gas control is a safety device. It must be replaced in case of any physical damage such as bent terminals, missing parts, stripped threads, or evidence of exposure to excessive heat.

Follow the operating instructions provided by the manufacturer of your heating appliance.

**TROUBLESHOOTING**

IMPORTANT: All service and trouble-shooting procedures should be performed by an experienced qualified service technician.

If the pilot will not stay lit:

1. Confirm that the “S” wire and the “I” wire are properly connected to the Control Module “S” and “I” terminals.
2. Confirm that the Spark to Pilot burner is properly grounded to the Gas Control Valve and the Control Module.
3. Check the power source from the 6-volt power adaptor or the Battery Back-up pack connection and condition of batteries.
4. Check the position of the CONTINUOUS PILOT switch on the Control Module. If main burner does not come ON when the manual switch and remote control is turned ON:
   a. Confirm that the pilot sparks and lights.
   b. Check the two (2) pin plastic connectors that plug into the face of the Gas Control valve.
   c. Confirm that the Gas Control valve is properly grounded to the Control Module.

**OPTIONAL GAS CONVERSION KITS**

Please contact your dealer or distributor for the proper Conversion kit for these fireplace models. Conversion kits will include complete instructions, minimum rate screw, plus the pilot and main burner orifice for the gas type required. The AF-4040 Electronic Gas Control Valve is convertible to use either natural or propane gas by simply turning a small Rotary knob located at the front of the gas valve. This rotary knob is located under a small rubber cap and should only be adjusted when converting gas type.

**CAUTION:** The gas type has been pre-set at the factory and must not be changed unless a complete conversion is made which includes changing of the gas pilot injector, minimum rate screw and main burner orifice.

# RF WIRING DIAGRAM

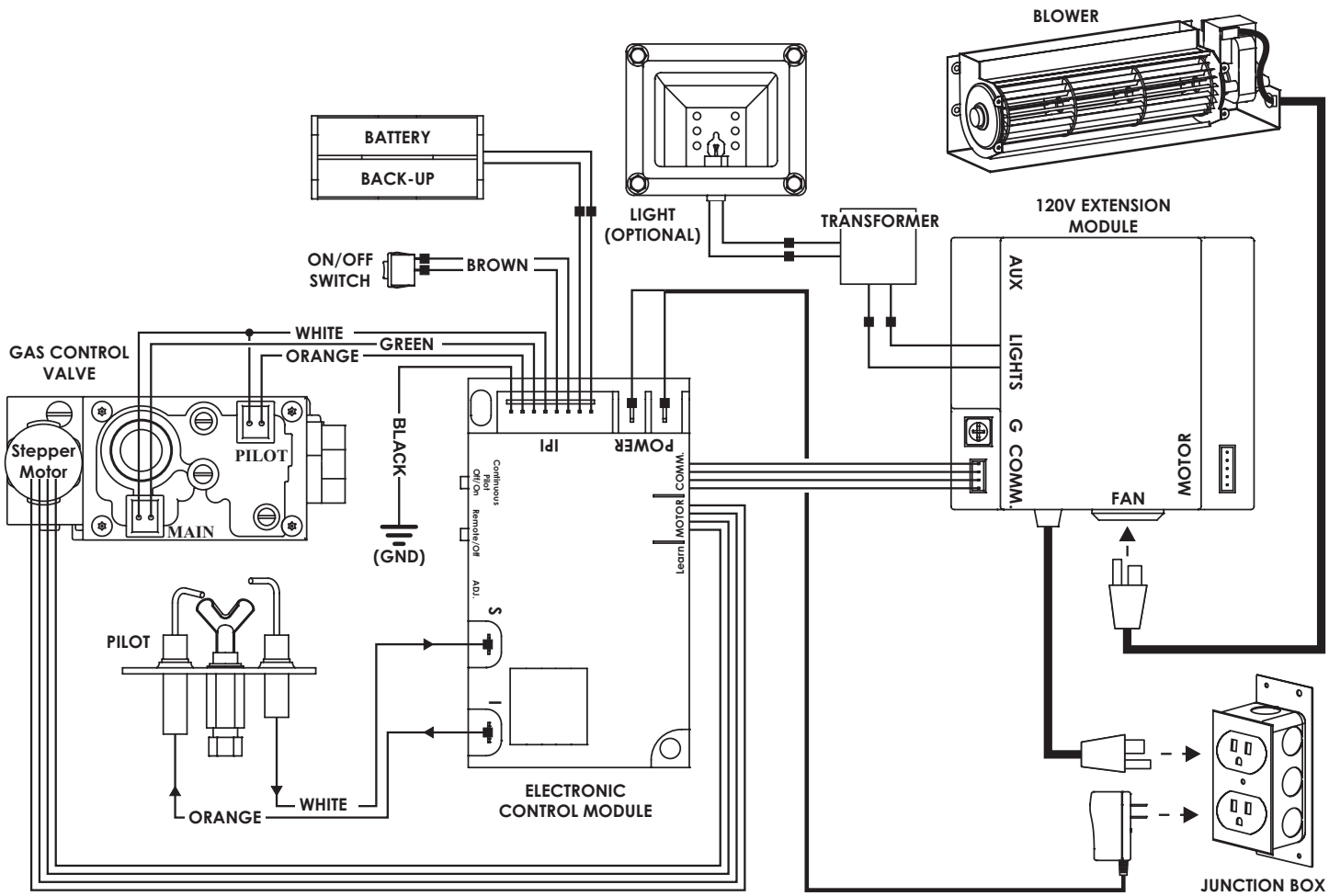


**Note:** For "RF" Fireplace models with Premium Multi-Function Remote Control, Refer to the separate instructions for operation of the remote control system.

**Figure 76**

# RF STANDING PILOT LIGHTING INSTRUCTIONS

## FOR YOUR SAFETY READ BEFORE LIGHTING

**WARNING: IF YOU DO NOT FOLLOW THESE INSTRUCTIONS EXACTLY, A FIRE OR EXPLOSION MAY RESULT CAUSING PROPERTY DAMAGE, PERSONAL INJURY, OR LOSS OF LIFE.**

**A. This appliance has a pilot which must be lighted by hand. When lighting the pilot, follow these instructions exactly.**

**B. BEFORE LIGHTING, smell around the appliance area for gas. Be sure to smell next to the floor because some gas in heavier than air and will settle on the floor.**

**WHAT TO DO IF YOU SMELL GAS**

- **Do not try to light any appliance.**
- **Do not touch any electrical switch.**
- **Do not use any phone in your building.**
- **Immediately call your gas supplier from a neighbor's phone. Follow the gas supplier's instructions. If you can not reach your gas supplier, call the fire department.**

**C. Use only your hand to push in or turn the gas control knob. Never use tools. If the knob will not push in or turn by hand, don't try to repair it, call a qualified service technician. Force or attempted repair may result in a fire or explosion.**

**D. Do not use this appliance if any part has been under water. Immediately call a qualified service technician to inspect the appliance and to replace any part of the control system and any gas control which has been under water.**

## LIGHTING INSTRUCTIONS

1. **STOP! Read the safety information above.**
2. **Turn OFF electric power to the appliance.**
3. **Open bottom louver assembly.**
4. **Turn gas cock counterclockwise to "ON" position.**
5. **Wait ten (10) minutes to clear out any gas. Then smell for gas, including near the floor. If you smell gas, STOP! Follow "B" in the safety information above on this label. If you do not smell gas, go to the next step.**
6. **Turn ON electric power to the appliance.**
7. **Find pilot - Follow metal tube from gas control. The pilot is behind the burner on the right side.**
8. **Using the remote control, turn main flame to "ON." If thepilot does not light within 60 seconds, stop and go to Step 5.**
9. **Refer to remote control instructions for detailed information, control features, and operation. Note: There is a switch on the side of the Electronic Control Module that allows for a contrinuous standing pilot mode or an intermittent pilot mode. See appliance manual for location of this switch. If the pilot or burner does not stay lit (in the standing pilot mode), stop and immediately call a qualified service technician or gas supplier.**
10. **If the burner or pilot does not operate properly after several tries, turn the gas control knob clockwise to "OFF" and call your service technician or gas supplier.**
11. **Close bottom louver assembly.**
12. **Operation of the gas valve, blower, and/or optional light must be controlled by using the hand held remote control. Refer to remote instructions for detailed operation information.**

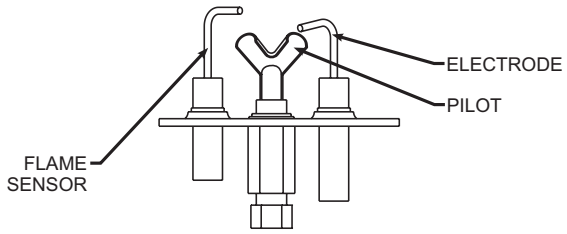


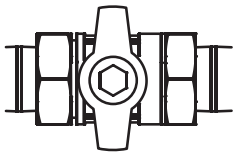

OFF

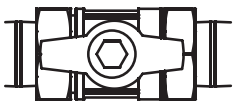

ON

## TO TURN OFF GAS TO APPLIANCE

1. **Turn off all electric power to the appliance if service is to be performed (if applicable).**
2. **Open bottom louver assembly.**
3. **Locate On/Off gas cock and turn clockwise to "OFF." Do not force.**
4. **Close bottom louver assembly.**

# MAINTENANCE AND SERVICE

**Please Note**
**It is normal for appliances fabricated of steel to give off some expansion and/or contraction noise during the start up or cool down cycle. Similar noises are found with your furnace heat exchanger or car engine.**

It is not unusual for your gas fireplace to give off some odor the first time it is burned. This is due to the curing of the paint and any undetected oil from the manufacturing process.

Please ensure that your room is well ventilated - open all windows.

**It is recommended that you burn your fireplace for at least six (6) hours the first time you use it. Place fan in the "OFF" position during this time.**

**IMPORTANT:** Turn off gas before servicing appliance. It is recommended that a qualified service person perform these check-ups at the beginning of each heating season.

- **Clean Burner and Control Compartment**
  Keep the control compartment, logs, and burner areas surrounding the logs clean by vacuuming or brushing at least twice a year.

  **Cleaning Procedure**
  1. Turn off pilot light at gas valve.
  2. Remove glass front. (See Glass Removal)
  3. Vacuum burner compartment.
  4. Reinstall glass front.
  5. Ignite pilot. (See Lighting Instructions)
  6. Operate the pilot burner. If it appears abnormal call a service person.

- **Check Vent System**
  The appliance and venting system should be inspected before initial use and at least annually by a qualified service person. Inspect the external vent cap on a regular basis to make sure that no debris is interfering with the air flow.

**Glass Cleaning**

It will be necessary to clean the glass periodically. During start-up condensation, which is normal, forms on the inside of the glass and causes lint, dust and other airborne particles to cling to the glass surface. Also initial paint curing may deposit a slight film on the glass. It is therefore recommended that the glass be cleaned two or three times with a non-abrasive household cleaner and warm water (we recommend gas fireplace glass cleaner). After that the glass should be cleaned two or three times during each heating season depending on the circumstances present.

**General Glass Information**

**Warning: Do not operate appliance with the glass front removed, cracked or broken. Replacement of the glass should be done by a licensed or qualified service person.**

Only glass approved for use by the manufacturer in fireplace may be used for replacement. The glass replacement should be done by a licensed or qualified service person.

**WARNING:**

1. The use of substitute glass will void all product warranties.
2. Care must be taken to avoid breakage of the glass.
3. Under no circumstances should this appliance be operated without the glass front or with a broken glass front. Replacement of the glass (with gasket) as supplied by the manufacturer should be done by a qualified service person.
4. Do not abuse the glass by striking or hitting the glass.

**WARNING: Do not use abrasive cleaners on glass. Do not attempt to clean glass when glass is hot.**

**Glass Removal and Replacement (Figures 77 and 78)**

1. Remove decorative front doors (where applicable) by opening and lifting straight up.
2. Remove decorative front by tilting lower portion forward to release ball catch and lifting front off mounting bracket. **See Figure 74.**
3. Release two glass frame clamps at bottom of firebox.
4. Remove glass frame.
5. Place glass frame onto firebox.
6. Attach two glass frame clamps at bottom of firebox.
7. Replace decorative front by hooking front mounting brackets. Be sure to lower front with slight angle to keep ball clasp from scratching the front of appliance. Push in lower portion to lock ball clasp.
8. Replace decorative front doors by aligning hinges over posts.

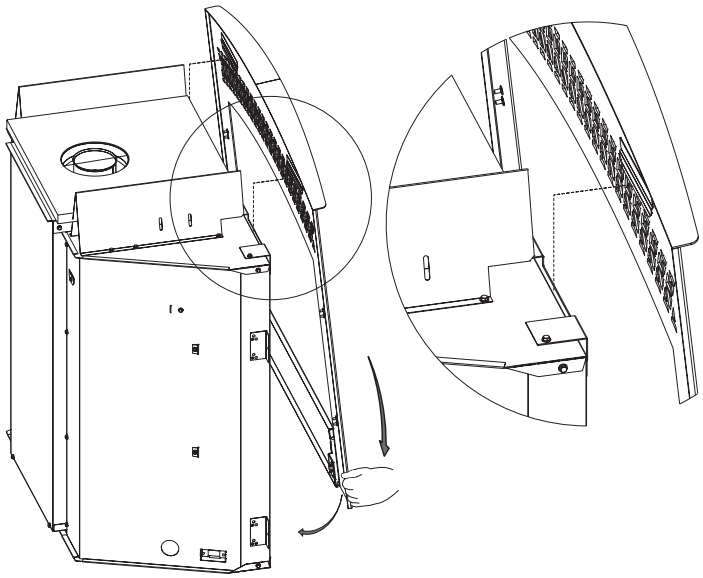

**Figure 78**

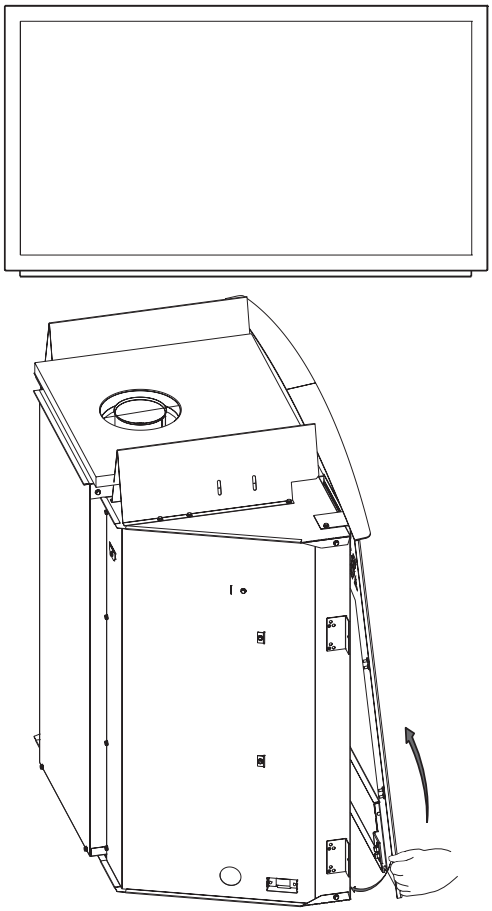

**Figure 77**

# PARTS VIEW

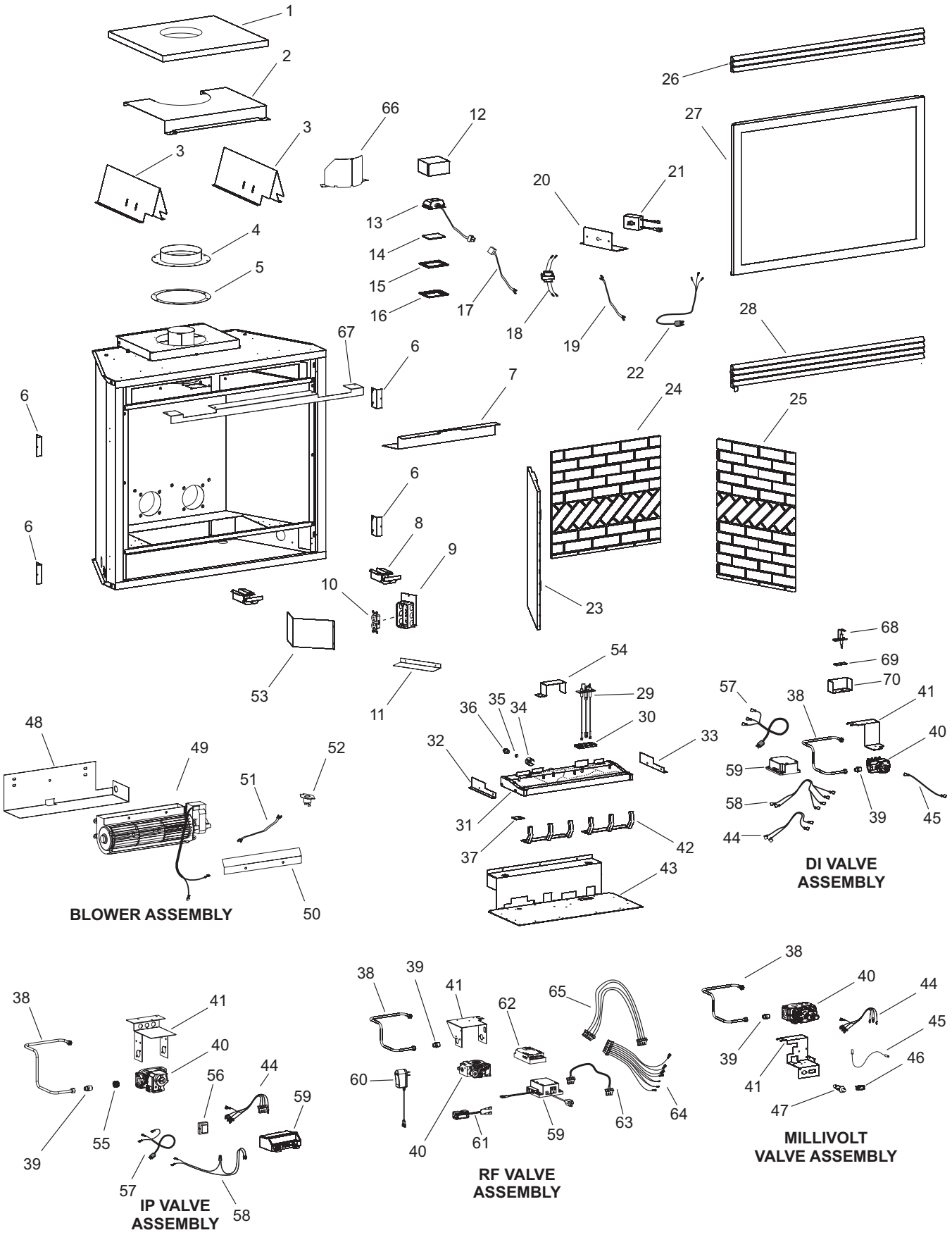


**Note: Refer to page 43 when ordering logs.**

# DVX36DP(31,51,71,91) PARTS LIST

| Index No. | Part Number | | | | Description |
|---|---|---|---|---|---|
| | DVX36DP31 | DVX36DP51 | DVX36DP71 | DVX36DP91 | |
| 1 | R9347 | R9347 | R9347 | R9347 | Insulation, Top Shield |
| 2 | 23437 | 23437 | 23437 | 23437 | Top Shield |
| 3 | 23219 | 23219 | 23219 | 23219 | Top Standoff (Qty. 2) |
| 4 | R7566 | R7566 | R7566 | R7566 | Vent Adapter |
| 5 | R7574 | R7574 | R7574 | R7574 | Vent Gasket |
| 6 | 10554 | 10554 | 10554 | 10554 | Nailing Flange (Qty. 4) |
| 7 | 23374 | 23374 | 23374 | 23374 | Flue Baffle |
| 8 | 16223 | 16223 | 16223 | 16223 | Spring Retainer Assembly |
| 9 | R3490 | R3490 | R3490 | R3490 | Junction Box |
| 10 | R3492 | R3492 | R3492 | R3492 | 3-Prong Receptical |
| 11 | 17357 | 17357 | 17357 | 17357 | Heat Shield (Junction Box) |
| 12 | 23116 | 23116 | 23116 | 23116 | Accent Lamp Cover |
| 13 | R9340 | R9340 | R9340 | R9340 | Accent Lamp |
| 14 | R9341 | R9341 | R9341 | R9341 | Accent Lamp Glass |
| 15 | R9343 | R9343 | R9343 | R9343 | Accent Lamp Gasket |
| 16 | R9342 | R9342 | R9342 | R9342 | Accent Lamp Bezel |
| 17 | R9390 | R9390 | R9390 | R9390 | Accent Lamp WIre Harness |
| 18 | R9344 | R9344 | R9344 | R9344 | 12 Volt Transformer |
| 19 | R9377 | R9377 | R9377 | R9377 | Wire Assembly |
| 20 | 10088 | 10088 | 10088 | 10088 | Rheostat Bracket |
| 21 | 18879 | 18879 | 18879 | 18879 | Rheostat |
| 22 | R6159 | R6159 | R6159 | R6159 | 3-Prong Plug |
| 23 | Not used on DVX36DP(31,51,71,91) Models | | | | Banded Brick Liner - Left |
| 24 | Not used on DVX36DP(31,51,71,91) Models | | | | Banded Brick Liner - Back |
| 25 | Not used on DVX36DP(31,51,71,91) Models | | | | Banded Brick Liner - Right |
| 26 | Not used on DVX36DP(31,51,71,91) Models | | | | Louver Assembly - Upper |
| 27 | 23088 | 23088 | 23088 | 23088 | Ceramic Glass Door Assembly |
| 28 | Not used on DVX36DP(31,51,71,91) Models | | | | Louver Assembly - Lower |
| 29 | R7612 | - | R5748 | R10424 | Pilot Assembly (LPG) |
| 29 | R7611 | - | R5747 | R10423 | Pilot Assembly (Nat) |
| 30 | R7617 | R7617 | R7617 | R9189 | Pilot Gasket |
| 31 | 23085 | 23085 | 23085 | 23085 | Burner Assembly |
| 32 | 11499 | 11499 | 11499 | 11499 | Burner Support - Left |
| 33 | 11377 | 11377 | 11377 | 11377 | Burner Support - Right |
| 34 | R5676 | R5676 | R5676 | R5676 | Air Shutter |
| 35 | P250 | P211 | P250 | P250 | Orifice (LPG) |
| 35 | P211 | P250 | P211 | P211 | Orifice (Nat) |
| 36 | P200 | P200 | P200 | P200 | Orifice Fitting |
| 37 | 11269 | 11269 | 11269 | 11269 | Gas Line Fitting |
| 38 | 17369 | 17369 | 17369 | 17369 | Tubing Assembly |

**Use Only Manufacturer's Replacement Parts. Use of Any Other Parts Could Cause Injury Or Death.**

# DVX36DP(31,51,71,91) PARTS LIST

| Index No. | Part Number | | | | Description |
|---|---|---|---|---|---|
| | DVX36DP31 | DVX36DP51 | DVX36DP71 | DVX36DP91 | |
| 39 | R2423 | R2423 | R2423 | R2423 | 5/16" Male Connector |
| 40 | R7578 | R7733 | R5746 | R10415 | Gas Valve (LPG) |
| 40 | R7577 | R7733 | R5745 | R10415 | Gas Valve (Nat) |
| 41 | 17161 | 20207 | 25640 | 26307 | Gas Valve Bracket |
| 42 | 23502 | 23502 | 23502 | 23502 | Grate Assembly (Qty. 2) |
| 43 | 23070 | 26634 | 23070 | 23070 | Burner Base / Log Shelf |
| 44 | R3435 | R8147 | R5751 | - | Wire Assembly |
| 45 | R5668 | R7613 | - | - | Ignitor Wire |
| 46 | R3436 | - | - | - | Remote/On/Off Switch |
| 47 | R2708 | - | - | - | Piezo Ignitor |
| 48 | - | - | - | 18858 | Blower Base |
| 49 | FBB4 | FBB4 | FBB4 | R7731 | Blower Assembly |
| 50 | - | - | - | 18880 | Blower Shield |
| 51 | - | - | - | R7831 | Blower Wire Assembly |
| 52 | R7649 | R7649 | R7649 | - | Fan Control Switch |
| 53 | 23501 | 23501 | 23501 | 23501 | Blower Heat Shield |
| 54 | 23694 | 23694 | 23694 | 23694 | Air Shutter Shield |
| 55 | - | - | R1109 | - | Bushing, Flush |
| 56 | - | - | R1995 | - | Transformer |
| 57 | - | R7615 | R5160 | - | Cord Set |
| 58 | - | R8144 | R721 | - | Wire Harness |
| 59 | - | R8143 | R1616 | R10417 | Control Module |
| 60 | - | - | - | R10419 | 7.5V AC Adapter |
| 61 | - | - | - | R10418 | Battery Back-up |
| 62 | - | - | - | R10416 | 120V Extension Module |
| 63 | - | - | - | R10497 | Extension Wire Harness |
| 64 | - | - | - | R10498 | 8 Pin Wire Harness |
| 65 | - | - | - | R10499 | 5 Pin Wire Harness |
| 66 | 25520 | 25520 | 25520 | 25520 | Heat Shield, (Flue) |
| 67 | 25129 | 25129 | 25129 | 25129 | Mounting Brace |
| 68 | - | R7590 | - | - | Spark Ignitor, PSE |
| 69 | - | R7589 | - | - | Gasket, PSE Ignitor |
| 70 | - | 19545 | - | - | Spark Ignitor Shield |
| N/S | - | - | - | R10428 | Min. Rate Screw - #52(LPG) |
| N/S | - | - | - | R10431 | Min. Rate Screw - #0 (NAT) |
| N/S | R9645 | R9645 | R9645 | R9645 | Replacement Halogen Bulb |

N/S = Not Shown

**Use Only Manufacturer's Replacement Parts. Use of Any Other Parts Could Cause Injury Or Death.**

# DVX42DP(31,51,71,91) PARTS LIST

| Index No. | Part Number | | | | Description |
|---|---|---|---|---|---|
| | DVX42DP31 | DVX42DP51 | DVX42DP71 | DVX42DP91 | |
| 1 | R9348 | R9348 | R9348 | R9348 | Insulation, Top Shield |
| 2 | 23437 | 23437 | 23437 | 23437 | Top Shield |
| 3 | 23219 | 23219 | 23219 | 23219 | Top Standoff (Qty. 2) |
| 4 | R7567 | R7567 | R7567 | R7567 | Vent Adapter |
| 5 | R7573 | R7573 | R7573 | R7573 | Vent Gasket |
| 6 | 10554 | 10554 | 10554 | 10554 | Nailing Flange (Qty. 4) |
| 7 | 23359 | 23359 | 23359 | 23359 | Flue Baffle |
| 8 | 16223 | 16223 | 16223 | 16223 | Spring Retainer Assembly |
| 9 | R3490 | R3490 | R3490 | R3490 | Junction Box |
| 10 | R3492 | R3492 | R3492 | R3492 | 3-Prong Receptical |
| 11 | 17357 | 17357 | 17357 | 17357 | Heat Shield (Junction Box) |
| 12 | 23116 | 23116 | 23116 | 23116 | Accent Lamp Cover |
| 13 | R9340 | R9340 | R9340 | R9340 | Accent Lamp |
| 14 | R9341 | R9341 | R9341 | R9341 | Accent Lamp Glass |
| 15 | R9343 | R9343 | R9343 | R9343 | Accent Lamp Gasket |
| 16 | R9342 | R9342 | R9342 | R9342 | Accent Lamp Bezel |
| 17 | R9390 | R9390 | R9390 | R9390 | Accent Lamp WIre Harness |
| 18 | R9344 | R9344 | R9344 | R9344 | 12 Volt Transformer |
| 19 | R9377 | R9377 | R9377 | R9377 | Wire Assembly |
| 20 | 10088 | 10088 | 10088 | 10088 | Rheostat Bracket |
| 21 | 18879 | 18879 | 18879 | 18879 | Rheostat |
| 22 | R6159 | R6159 | R6159 | R6159 | 3-Prong Plug |
| 23 | Not Used On DVX42DP(31,51,71,91) Models | | | | Banded Brick Liner - Left |
| 24 | Not Used On DVX42DP(31,51,71,91) Models | | | | Banded Brick Liner - Back |
| 25 | Not Used On DVX42DP(31,51,71,91) Models | | | | Banded Brick Liner - Right |
| 26 | Not Used On DVX42DP(31,51,71,91) Models | | | | Louver Assembly - Upper |
| 27 | 23089 | 23089 | 23089 | 23089 | Ceramic Glass Door Assembly |
| 28 | Not Used On DVX42DP(31,51,71,91) Models | | | | Louver Assembly - Lower |
| 29 | R7612 | - | R5748 | R10424 | Pilot Assembly (LPG) |
| 29 | R7611 | - | R5747 | R10423 | Pilot Assembly (Nat) |
| 30 | R7617 | R7617 | R7617 | R9189 | Pilot Gasket |
| 31 | 23085 | 23085 | 23085 | 23085 | Burner Assembly |
| 32 | 11499 | 11499 | 11499 | 11499 | Burner Support - Left |
| 33 | 11377 | 11377 | 11377 | 11377 | Burner Support - Right |
| 34 | R5676 | R5676 | R5676 | R5676 | Air Shutter |
| 35 | P245 | P304 | P245 | P245 | Orifice (LPG) |
| 35 | P209 | P305 | P209 | P209 | Orifice (Nat) |
| 36 | P200 | P200 | P200 | P200 | Orifice Fitting |
| 37 | 11269 | 11269 | 11269 | 11269 | Gas Line Fitting |
| 38 | 17369 | 17369 | 17369 | 17369 | Tubing Assembly |

**Use Only Manufacturer's Replacement Parts. Use of Any Other Parts Could Cause Injury Or Death.**

# DVX42DP(31,51,71,91) PARTS LIST

| Index No. | Part Number | | | | Description |
|---|---|---|---|---|---|
| | DVX42DP31 | DVX42DP51 | DVX42DP71 | DVX42DP91 | |
| 39 | R2423 | R2423 | R2423 | R2423 | 5/16" Male Connector |
| 40 | R7578 | R7733 | R5746 | R10415 | Gas Valve (LPG) |
| 40 | R7577 | R7733 | R5745 | R10415 | Gas Valve (Nat) |
| 41 | 17161 | 20207 | 25640 | 26307 | Gas Valve Bracket |
| 42 | 23502 | 23502 | 23502 | 23502 | Grate Assembly (Qty. 2) |
| 43 | 23070 | 26634 | 23070 | 23070 | Burner Base / Log Shelf |
| 44 | R3435 | R8147 | R5751 | - | Wire Assembly |
| 45 | R5668 | R7613 | - | - | Ignitor Wire |
| 46 | R3436 | - | - | - | Remote/On/Off Switch |
| 47 | R2708 | - | - | - | Piezo Ignitor |
| 48 | - | - | - | 18858 | Blower Base |
| 49 | FBB4 | FBB4 | FBB4 | R7731 | Blower Assembly |
| 50 | - | - | - | 18880 | Blower Shield |
| 51 | - | - | - | R7831 | Blower Wire Assembly |
| 52 | R7649 | R7649 | R7649 | - | Fan Control Switch |
| 53 | 23501 | 23501 | 23501 | 23501 | Blower Heat Shield |
| 54 | 23694 | 23694 | 23694 | 23694 | Air Shutter Shield |
| 55 | - | - | R1109 | - | Bushing, Flush |
| 56 | - | - | R1995 | - | Transformer |
| 57 | - | R7615 | R5160 | - | Cord Set |
| 58 | - | R8144 | R721 | - | Wire Harness |
| 59 | - | R8143 | R1616 | R10417 | Control Module |
| 60 | - | - | - | R10419 | 7.5V AC Adapter |
| 61 | - | - | - | R10418 | Battery Back-up |
| 62 | - | - | - | R10416 | 120V Extension Module |
| 63 | - | - | - | R10497 | Extension Wire Harness |
| 64 | - | - | - | R10498 | 8 Pin Wire Harness |
| 65 | - | - | - | R10499 | 5 Pin Wire Harness |
| 66 | 25520 | 25520 | 25520 | 25520 | Heat Shield, (Flue) |
| 67 | 25130 | 25130 | 25130 | 25130 | Mounting Brace |
| 68 | - | R7590 | - | - | Spark Ignitor, PSE |
| 69 | - | R7589 | - | - | Gasket, PSE Ignitor |
| 70 | - | 19545 | - | - | Spark Ignitor Shield |
| N/S | - | - | - | R10427 (# 47) | Min. Rate Screw (LPG) |
| N/S | - | - | - | R10431 (# 0) | Min. Rate Screw (NAT) |
| N/S | R9645 | R9645 | R9645 | R9645 | Replacement Halogen Bulb |

N/S = Not Shown

**Use Only Manufacturer's Replacement Parts. Use of Any Other Parts Could Cause Injury Or Death.**

# FBB4 VARIABLE SPEED BLOWER INSTALLATION

Attention: Install blower assembly before connecting gas inlet supply line

Note: Junction box on right side of fireplace must be pre-wired at time of fireplace installation for use with blower assembly. It is recommended that an ON/OFF wall switch be installed that will activate the power supply to the furnace by a qualified electrician.

1. If installed, turn OFF gas supply to fireplace.
2. If applicable, turn OFF electric supply to fireplace.
3. Lower bottom louver on fireplace.
4. Refer to page 73, "Junction Box Wiring Installation Instructions" to complete wiring of junction box.

Attention: If installed, do not damage gas inlet supply line when blower assembly is inserted into fireplace. If necessary, remove gas inlet supply line.

5. Insert blower assembly into interior, bottom of fireplace. Position blower assembly behind gas valve, align notch on back of blower assembly with center screw on fireplace back and push blower assembly against fireplace back. The magnets on the back and bottom of blower assembly will sufficiently hold blower assembly in place.
6. Position speed control box to the right of gas valve. Attach speed control box to bottom of fireplace. The magnets on bottom of speed control box will sufficiently hold speed control box in place.
7. With base (flush face) of fan control switch facing upward, insert base of fan control switch under the mounting tabs on valve bracket. The base (flush face) of fan control switch must be in contact with bottom of firebox.
8. Insert power cord plug into junction box.
9. Close bottom louver on fireplace.
10. Installation of FBB4 variable speed blower assembly is completed.

Wiring

The appliance, when installed, must be electrically grounded in accordance with local codes or, in the absence of local codes, with the National Electrical Code, ANSI/NFPA 70, if an external electrical source is utilized. This appliance is equipped with a three-prong [grounding] plug for your protection against shock hazard and should be plugged directly into a properly grounded three-prong receptacle. Do not cut or remove the grounding prong from this plug. For an ungrounded receptacle, an adapter, which has two prongs and a wire for grounding, can be purchased, plugged into the ungrounded receptacle and its wire connected to the receptacle mounting screw. With this wire completing the ground, the appliance cord plug can be plugged into the adapter and be electrically grounded.

**Caution: Label all wires prior to disconnection when servicing controls. Wiring errors can cause improper and dangerous operation. Verify proper operation after servicing.**

**Blower Motor**

The blower motor does not have oiling holes. Do not attempt to oil the blower motor.

**Blower Wheels**

The blower wheels will collect lint and could require periodic cleaning. If the air output decreases or the noise level increases, it indicates a dirty blower wheel. Remove fan and clean blower wheels.

**Warning: Unplugging of blower accessory will not stop the heater from cycling. To turn off gas to the heater (millivolt model): push in gas control knob slightly and turn clockwise to "OFF." Do not force.**

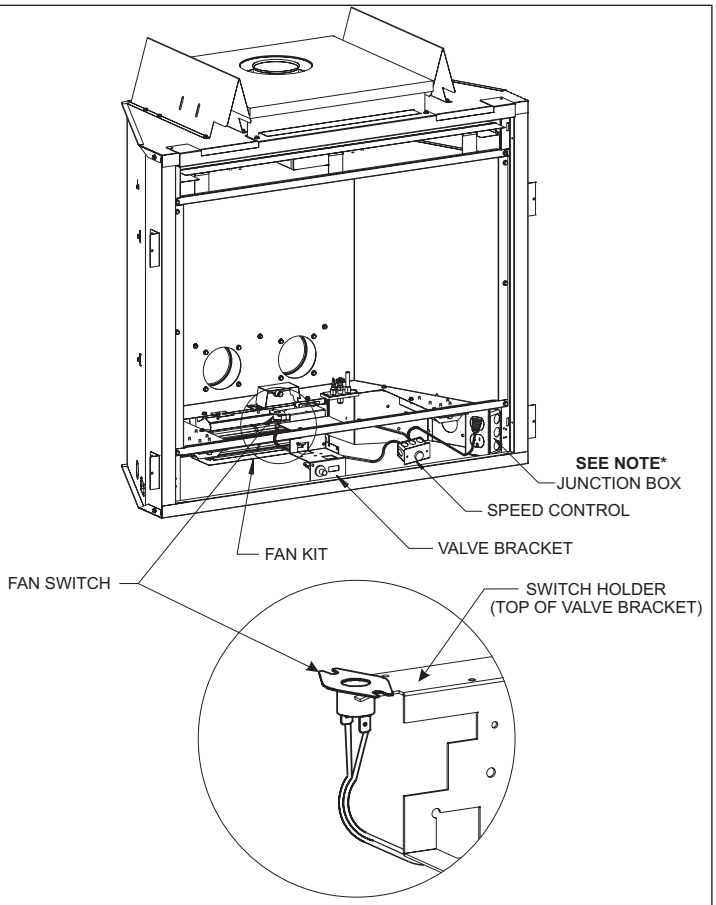


***Note: Refer to Junction Box wiring instructions on page 73 for proper operation.**

**Figure 79**

# FBB4 VARIABLE SPEED BLOWER INSTALLATION

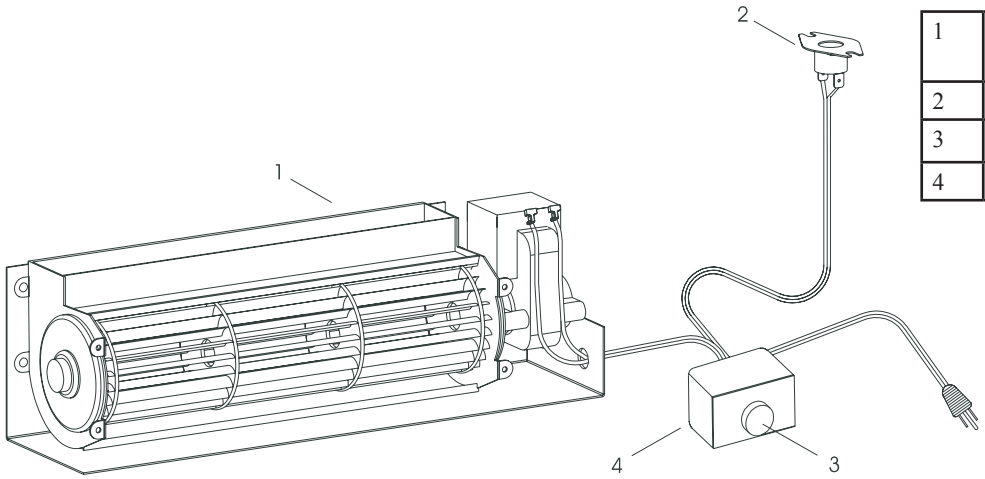


| | | |
|---|---|---|
| 1 | FBB4 | BLOWER ASSEMBLY COMPLETE |
| 2 | R7649 | FAN CONTROL |
| 3 | R4192 | SPEED CONTROL KNOB |
| 4 | R4186 | SPEED CONTROL |

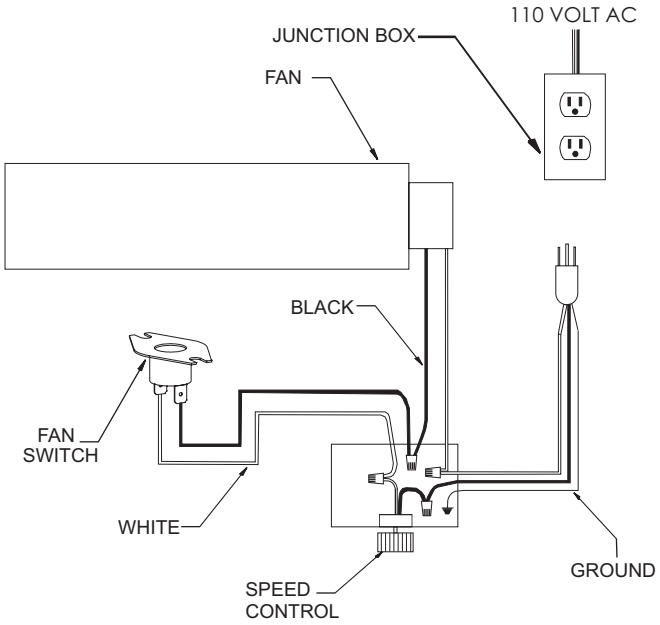


# JUNCTION BOX WIRING INSTALLATION INSTRUCTIONS

**CAUTION: ALL WIRING SHOULD BE DONE BY A QUALIFIED ELECTRICIAN AND SHALL BE IN COMPLIANCE WITH ALL LOCAL, CITY AND STATE BUILDING CODES. BEFORE MAKING THE ELECTRICAL CONNECTION, MAKE SURE THAT MAIN POWER SUPPLY IS DISCONNECTED. THE APPLIANCE, WHEN INSTALLED, MUST BE ELECTRICALLY GROUNDED IN ACCORDANCE WITH LOCAL CODES OR, IN THE ABSENCE OF LOCAL CODES, WITH THE NATIONAL ELECTRICAL CODE ANSI/NFPA 70 (LATEST EDITION).**

A factory installed junction box is located on the lower right side of the fireplace. Wiring must be fed to the junction box and attached to the receptacle that is provided. Leave approximately 6" of wire in the junction box for connection.

Attach black wire to one side of the receptacle and white wire to opposite side of receptacle. The ground wire should be attached to the green (ground) screw.

Install the receptacle into the junction box. Attach cover plate.

JUNCTION BOX CONNECTIONS

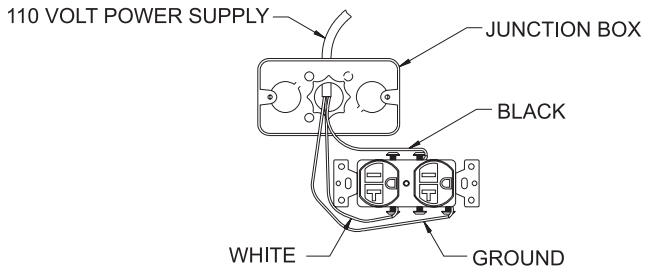


**Figure 80**

# ACCENT LAMP

Your Luxury Direct Vent Gas Fireplace comes equipped with our "Accent Lamp." The light has been pre-wired and is controlled from the Rheostat.

If in the event the lamp or lens needs to be replaced, follow the instructions below:

1. Unplug the Accent Lamp/transformer from the junction box inside the fireplace.
2. Remove the four screws that secure the lens frame. This frame retains the glass lens. The bulb can now be accessed.

**Note:** Do not handle the lamp (bulb) with bare fingers, protect with clean dry cloth.

The lamp will pull straight out of the socket. Replace with 10 Watt/12 Volt Halogen bulb.

When re-installing, ensure integrity of gasket seal.

**THE FIREBOX MUST BE SEALED.**

Over-tightening the screws could break the lens.

"Light Leakage" from the upper area may be observed. The holes in the lamp housing are necessary for ventilation and must not be covered.

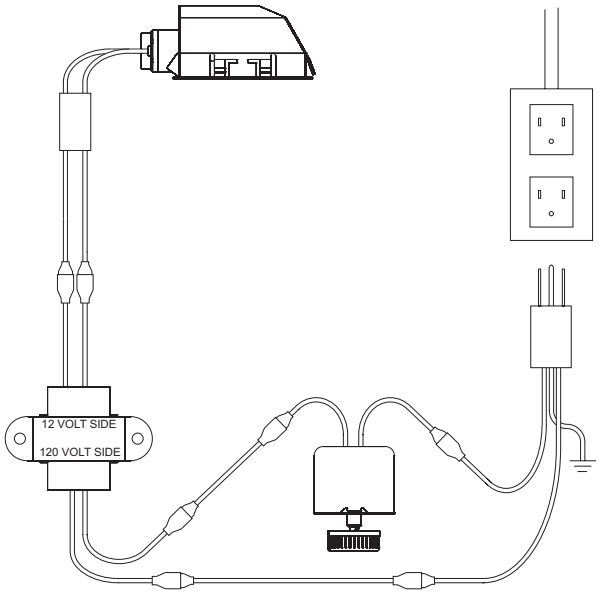


**Figure 81 - Accent Lamp Wiring**

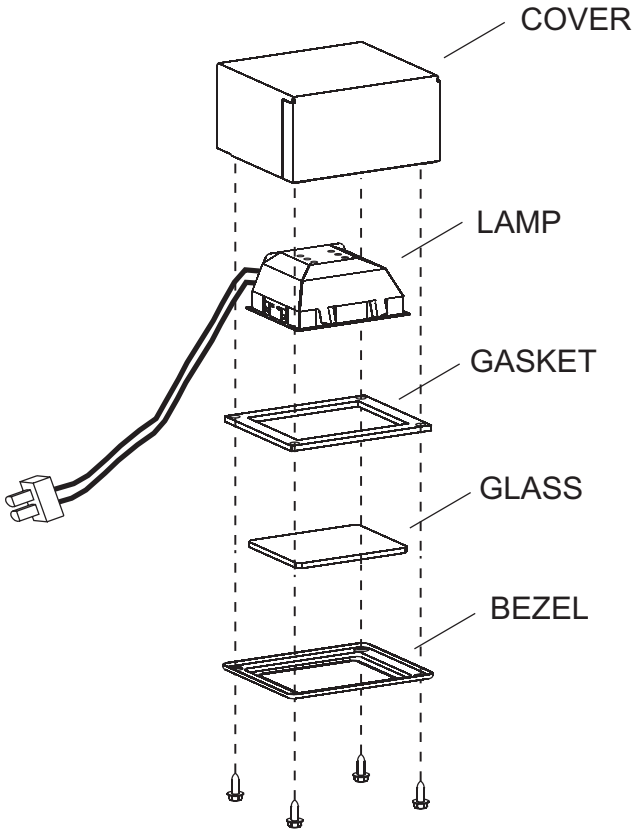


**Figure 82 - Accent Lamp Parts**

# BRICK LINER INSTALLATION INSTRUCTIONS

1. Using gloves, unpack liner components and check for damaged or missing components.
2. Lower bottom louver and remove upper louver on fireplace.
3. Remove glass frame assembly from fireplace.
4. Remove rear logs from burner assembly.
5. Place brick panel (rear) against rear wall in fireplace.
   Note: The top edge will have a half-moon cutout relief to match up with the rear flue vent hole.
6. While holding finished edge on brick panel (side), place brick panel (sides) against side walls in fireplace. Move side panels rearward until the back edge meets the rear brick panel. Slide side brick panels down so they rest on firebox bottom.
7. Align grout lines on top brick panel with the grout lines on the side brick panels. Place the top brick panel into brick panel holder. With needle-nose pliers, carefully bend hold-down tabs on brick panel holder over the edges of the top brick panel. The hold-down tabs will securely hold the top brick panel in place.
8. Replace rear logs onto burner assembly. (Refer to log placement, pages 40 to 43.)
9. Attach glass frame assembly onto fireplace.
10. Raise bottom louver and replace top louver onto fireplace.
11. Installation of optional brick liner is complete.

# ACCESSORIES

The following accessory parts must be obtained from your Empire Comfort Systems dealer. If you need additional information contact your dealer.

| | | |
|---|---|---|
| Simulated Stone Panels<br> 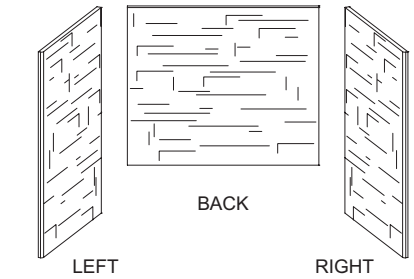 <br> | The simulated stone panels were designed to enhance the appearance of your fireplace, imitating the look of authentic masonry.<br><br>STACKED STONE | DVP36XG<br>DVP42XG |
| Simulated Brick Panels<br> 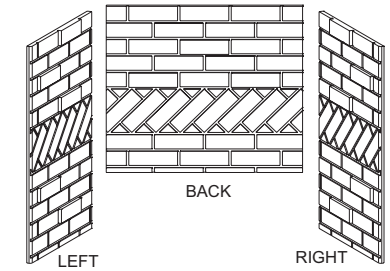 <br> | The simulated stone panels were designed to enhance the appearance of your fireplace, imitating the look of authentic masonry.<br><br>BANDED BRICK | DVP36XE<br>DVP42XE |

## DECORATIVE ACCESSORIES

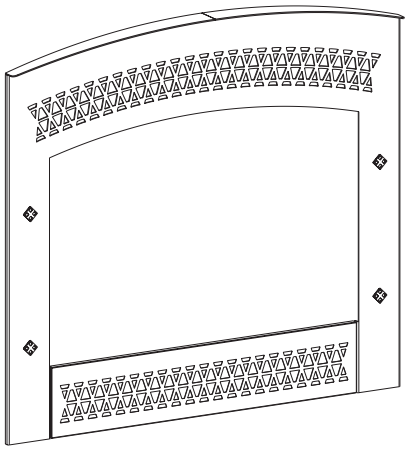

**BRAIDED ARCH FRONT**

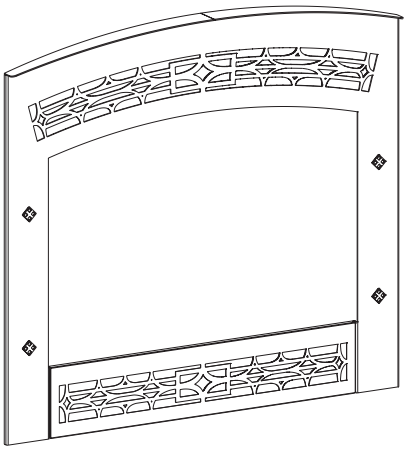

**TIFFANY ARCH FRONT**

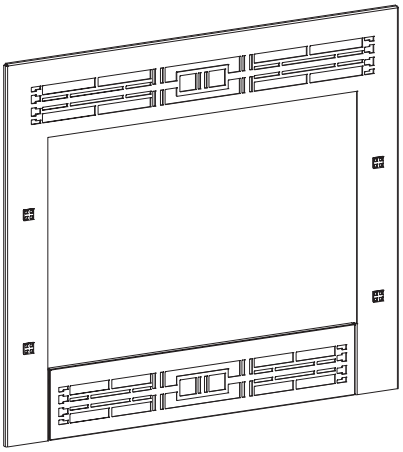

**ARTS & CRAFTS FRONT**

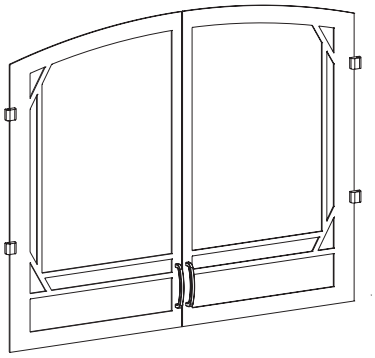

**MARQUIS ARCH DOORS**

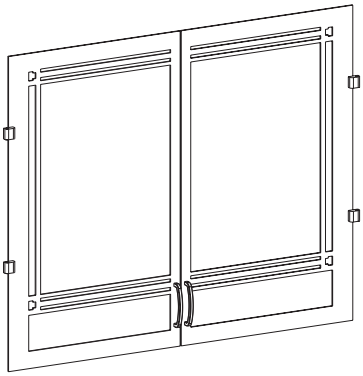

**ARTS & CRAFTS DOORS**

# MASTER PARTS DISTRIBUTOR LIST

To Order Parts Under Warranty, please contact your local Empire dealer. See the dealer locator at www.empirecomfort.com. To provide warranty service, your dealer will need your name and address, purchase date and serial number, and the nature of the problem with the unit.

To Order Parts After the Warranty Period, please contact your dealer or one of the Master Parts Distributors listed below. This list changes from time to time. For the current list, please click on the Master Parts button at www.empirecomfort.com.

Please note: Master Parts Distributors are independent businesses that stock the most commonly ordered Original Equipment repair parts for Heaters, Grills, and Fireplaces manufactured by Empire Comfort Systems Inc.

**Star-Fire Distributors**
1355 Evans Avenue
Akron, OH 44305

**Phone:** 330-630-2794
**Toll Free:** 800-875-6220
**Fax:** 330-633-8701
**Parts: Heater & Hearth and Grills**

**Dey Distributing**
1401 Willow Lake Boulevard
Vadnais Heights, MN 55101

**Phone:** 651-490-9191
**Toll Free:** 800-397-1339
**Website:** www.deydistributing.com
**Parts: Heater & Hearth**

**East Coast Energy Products**
10 East Route 36
West Long Branch, NJ 07764

**Phone:** 732-870-8809
**Toll Free:** 800-755-8809
**Fax:** 732-870-8811
**Website:** www.eastcoastenergy.com
**Parts: Heater & Hearth and Grills**

**Victor Division of F. W. Webb Company**
200 Locust Street
Hartford, CT 06114

**Phone:** 860-722-2433
**Toll Free:** 800-243-9360
**Fax:** 860-293-0479
**Toll Free Fax:** 800-274-2004
**Websites:** www.fwwebb.com & www.victormfg.com
**Parts: Heater & Hearth and Grills**

# HOW TO ORDER REPAIR PARTS

**Parts Not Under Warranty**

Parts can be ordered through your Service Person, Dealer, or a Master Parts Distributor. See above for the Master Parts Distributors list. For best results, the **service person or dealer** should order parts through the distributor. Parts can be shipped directly to the **service person/dealer**.

**Warranty Parts**

Warranty parts will need a proof of purchase and can be ordered by your Service Person or Dealer. Proof of purchase is **required** for warranty parts.

All parts listed in the Parts List have a Part Number. When ordering parts, first obtain the Model Number from the name plate on your equipment. Then determine the Part Number (**not** the Index Number) and the Description of each part from the following appropriate illustration and list. Be sure to give all this information . . .

Appliance Number _____ Part Description _____

Appliance Serial Number _____ Part Number _____

Type of Gas (Propane or Natural) _____

Do not order bolts, screws, washers or nuts. They are standard hardware items and can be purchased at any local hardware store.

Shipments contingent upon strikes, fires and all causes beyond our control.

**Empire Comfort Systems**
918 Freeburg Avenue
Belleville, Illinois 62220-2623

Web Site www.empirecomfort.com

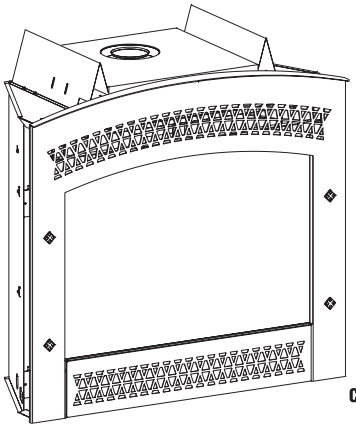

# *The Studio Series Direct Vent Gas Fireplace Heater*

**MILLIVOLT STANDING PILOT: DVX36DP31(N,P)-2; DVX42DP31(N,P)-2**
**DIRECT IGNITION: DVX36DP51N-1; DVX42DP51N-1**
**INTERMITTENT PILOT: DVX36DP71(N,P)-2; DVX42DP71(N,P)-2**
**REMOTE RF MODELS: DVX36DP91(N,P)-2; DVX42DP91(N,P)-2**

**Fireplace requires one of the following fronts:**
**Arched: DCF(36,42)B(FB,CM,HP), DCF(36,42)T(FB,CM,HP)**
**Rectangular: DCF(36,42)A(FB,CM,HP)**

**Fireplace requires one of the following ceramic liners:**
**DVP(36,42)XE, DVP(36,42)XG**

GAS-FIRED C UL US LISTED

All Brick Liners are made from Ceramic Fiber for rich detail and lasting beauty. Banded Brick Liners have dark "creamed coffee" bricks with charcoal mortar in running bond courses, plus an accent band of diagonal bricks. Stacked Stone Liners have stones of varying depth and color for a rustic cabin look.

## CLEARANCES TO COMBUSTIBLES

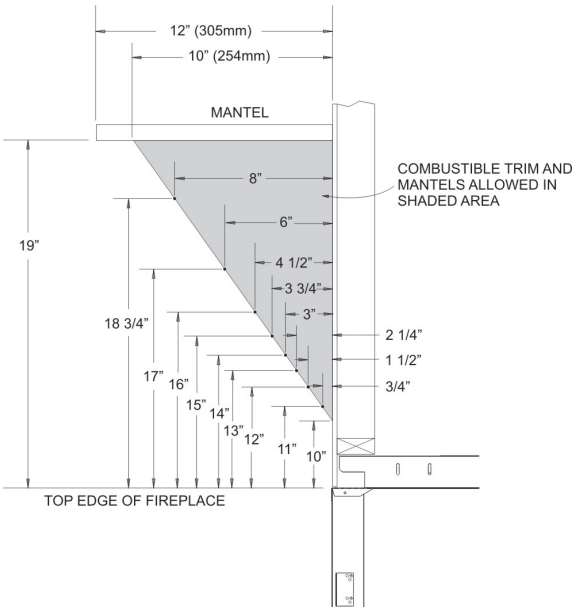


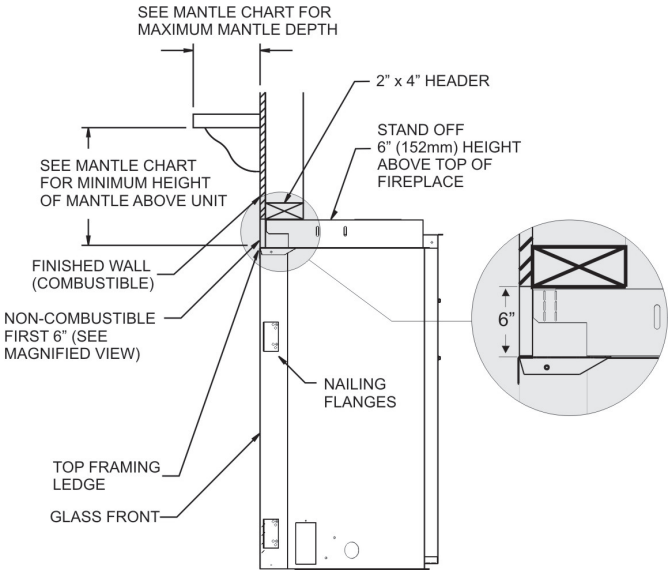


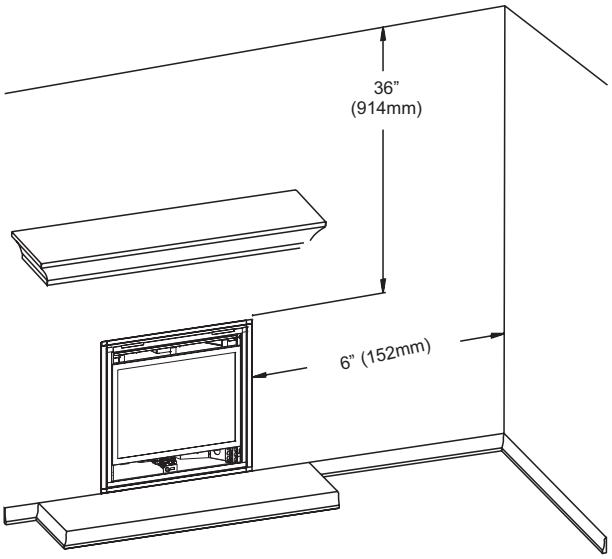


| Clearance to Combustibles | |
|---|---|
| Back | 0" (0 mm) |
| Side | 0" (0 mm) |
| Floor | 0" (0 mm) |
| Top Stand-off | 0" (0 mm) |
| Top Framing Edge | 6" (152 mm) |

**Empire Comfort Systems**
918 Freeburg Avenue
Belleville, Illinois 62220-2623

Web Site www.empirecomfort.com

# *The Studio Series Direct Vent Gas Fireplace Heater*

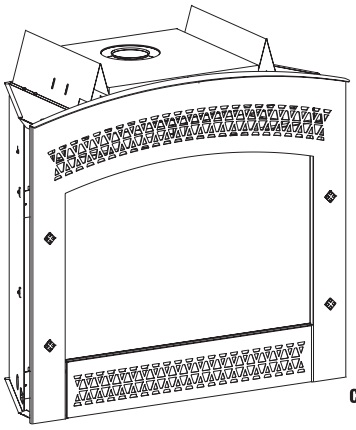

**MILLIVOLT STANDING PILOT: DVX36DP31(N,P)-2; DVX42DP31(N,P)-2**
**DIRECT IGNITION: DVX36DP51N-1; DVX42DP51N-1**
**INTERMITTENT PILOT: DVX36DP71(N,P)-2; DVX42DP71(N,P)-2**
**REMOTE RF MODELS: DVX36DP91(N,P)-2; DVX42DP91(N,P)-2**

**Fireplace requires one of the following fronts:**
**Arched: DCF(36,42)B(FB,CM,HP), DCF(36,42)T(FB,CM,HP)**
**Rectangular: DCF(36,42)A(FB,CM,HP)**

**Fireplace requires one of the following ceramic liners:**
**DVP(36,42)XE, DVP(36,42)XG**

GAS-FIRED C UL US LISTED

All Brick Liners are made from Ceramic Fiber for rich detail and lasting beauty. Banded Brick Liners have dark "creamed coffee" bricks with charcoal mortar in running bond courses, plus an accent band of diagonal bricks. Stacked Stone Liners have stones of varying depth and color for a rustic cabin look.

## FIREBOX DIMENSIONS

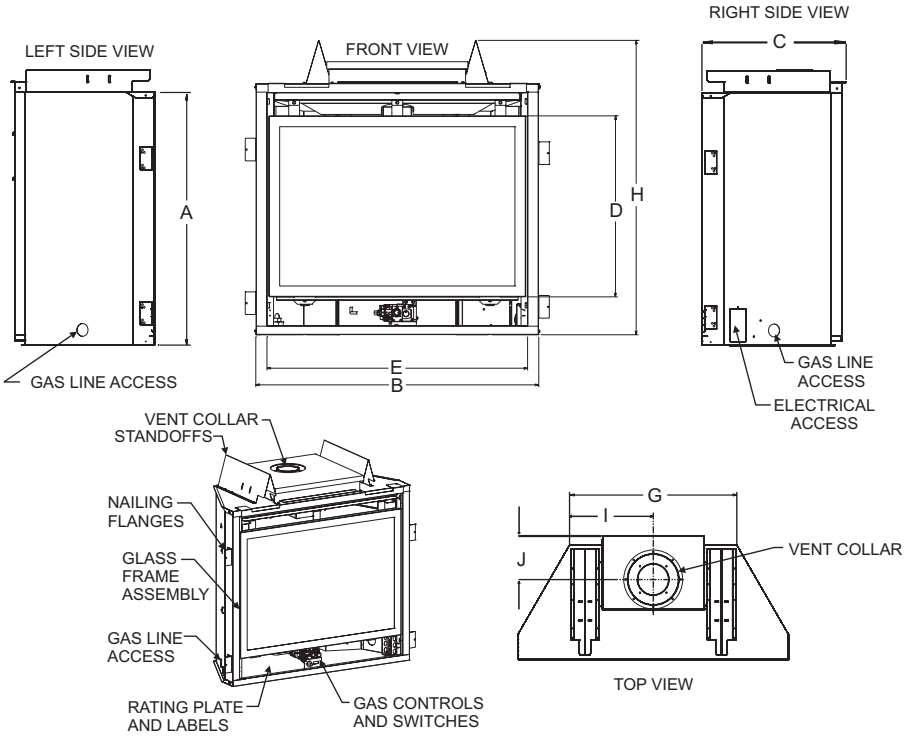


| DVX Dimensions | | |
|---|---|---|
| Dimension | DVX36FP | DVX42FP |
| A | 34 3/4"<br>882.7 mm | 34 3/4"<br>882.7 |
| B | 39"<br>990.6 mm | 43"<br>1092.2 mm |
| C | 19 7/8"<br>505 mm | 19 7/8"<br>505 mm |
| D | 25"<br>635 mm | 25"<br>635 mm |
| E | 36"<br>914.4 mm | 40"<br>1016 mm |
| G | 26 1/2"<br>673.1 mm | 26 1/2"<br>673.1 mm |
| H | 40 3/4"<br>1035.1 mm | 40 3/4"<br>1035.1 mm |
| I | 13 1/4"<br>336.6 mm | 13 1/4"<br>336.6 mm |
| J | 7 1/8"<br>181 mm | 7 1/8"<br>181 mm |

## FRAMING DIMENSIONS

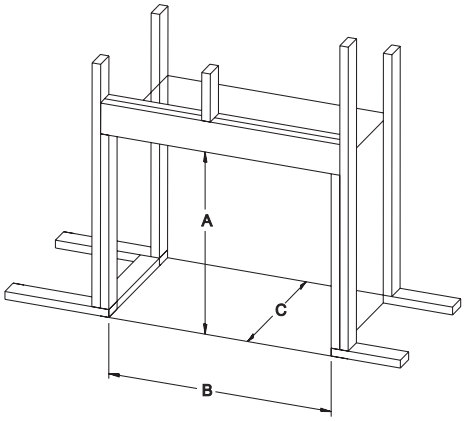


| | DVX36 | DVX42 |
|---|---|---|
| "A" | 40 7/8" | 40 7/8" |
| "B" | 40 3/8" | 43 3/8" |
| "C" | 19 7/8" | 19 7/8" |

# SERVICE NOTES

Empire Comfort Systems Inc.
918 Freeburg Ave. Belleville, IL  62220

If you have a general question about our products, please e-mail us at info@empirecomfort.com.
If you have a service or repair question, please contact your dealer.

**www.empirecomfort.com**