This Owner's Manual is provided and hosted by Appliance Factory Parts.

Appliance Factory Parts
Experts in BBQ, Humidifier, & Appliance Parts
1-800-955-7075

WHIRLPOOL 3RGSC9455JQ3 Owner's Manual

Shop genuine replacement parts for WHIRLPOOL 3RGSC9455JQ3

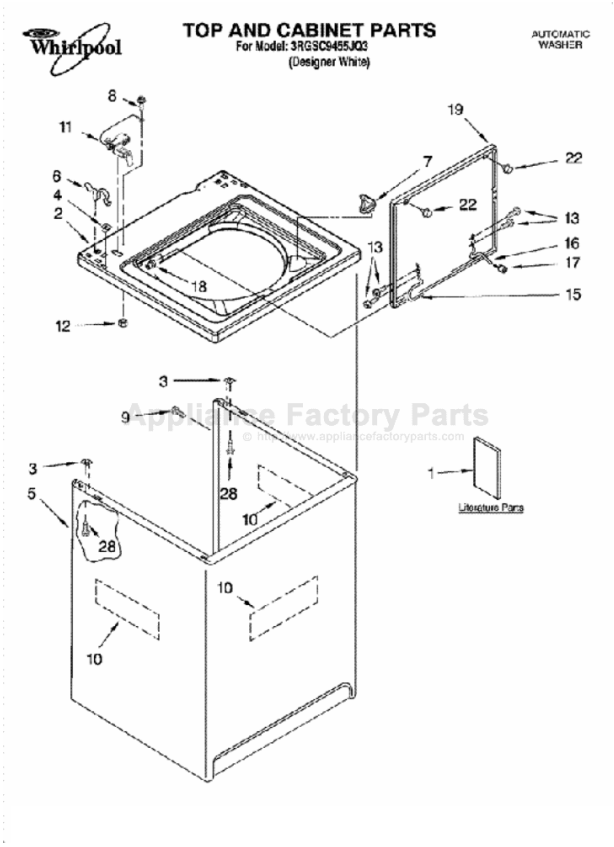

Find Your WHIRLPOOL Washer Parts - Select From 4132 Models

-------- Manual continues below --------

Whirlpool®
Home Appliances

TWO SPEED AUTOMATIC WASHERS

Use & Care Guide

Table of Contents.....2

Models: 3RGSC9455, 3RLBR8543,
3SLSQ7533, 3RLSQ8533

8315977A

TABLE OF CONTENTS

WASHER SAFETY **3**
PARTS AND FEATURES **4**
WASHER USE **5**
Understanding Washer Cycles 5
Loading 5
Normal Washer Sounds 5
Starting Your Washer 6
Selecting a Cycle and Time 7
Rinse and Spin 8
Drain and Spin 8
Adding Liquid Chlorine Bleach 8
Adding Liquid Fabric Softener 8
Self-Cleaning Lint Filter 8
WASHER CARE **8**
Cleaning Your Washer 8
Water Inlet Hoses 8
Vacation, Storage and Moving Care 9
TROUBLESHOOTING **9**
ASSISTANCE OR SERVICE **11**

WASHER SAFETY

Your safety and the safety of others are very important.

We have provided many important safety messages in this manual and on your appliance. Always read and obey all safety messages.

This is the safety alert symbol.

This symbol alerts you to potential hazards that can kill or hurt you and others.

All safety messages will follow the safety alert symbol and either the word “DANGER” or “WARNING.” These words mean:

⚠ DANGER — **You can be killed or seriously injured if you don't immediately follow instructions.**

⚠ WARNING — **You can be killed or seriously injured if you don't follow instructions.**

All safety messages will tell you what the potential hazard is, tell you how to reduce the chance of injury, and tell you what can happen if the instructions are not followed.

IMPORTANT SAFETY INSTRUCTIONS

WARNING: To reduce the risk of fire, electric shock, or injury to persons when using the washer, follow basic precautions, including the following:

- Read all instructions before using the washer.
- Do not wash articles that have been previously cleaned in, washed in, soaked in, or spotted with gasoline, dry-cleaning solvents, other flammable, or explosive substances as they give off vapors that could ignite or explode.
- Do not add gasoline, dry-cleaning solvents, or other flammable, or explosive substances to the wash water. These substances give off vapors that could ignite or explode.
- Under certain conditions, hydrogen gas may be produced in a hot water system that has not been used for 2 weeks or more. HYDROGEN GAS IS EXPLOSIVE. If the hot water system has not been used for such a period, before using the washing machine, turn on all hot water faucets and let the water flow from each for several minutes. This will release any accumulated hydrogen gas. As the gas is flammable, do not smoke or use an open flame during this time.
- Do not allow children to play on or in the washer. Close supervision of children is necessary when the washer is used near children.
- Before the washer is removed from service or discarded, remove the door or lid.
- Do not reach into the washer if the drum, tub or agitator is moving.
- Do not install or store the washer where it will be exposed to the weather.
- Do not tamper with controls.
- Do not repair or replace any part of the washer or attempt any servicing unless specifically recommended in this Use and Care Guide or in published user-repair instructions that you understand and have the skills to carry out.
- See Installation Instructions for grounding requirements.
- If the supply cord is damaged, it must be replaced by the manufacturer or its service agent or a similarly qualified person in order to avoid a hazard.

SAVE THESE INSTRUCTIONS

PARTS AND FEATURES

This manual covers several different models. The washer you have purchased may have some or all of the parts and features listed below.

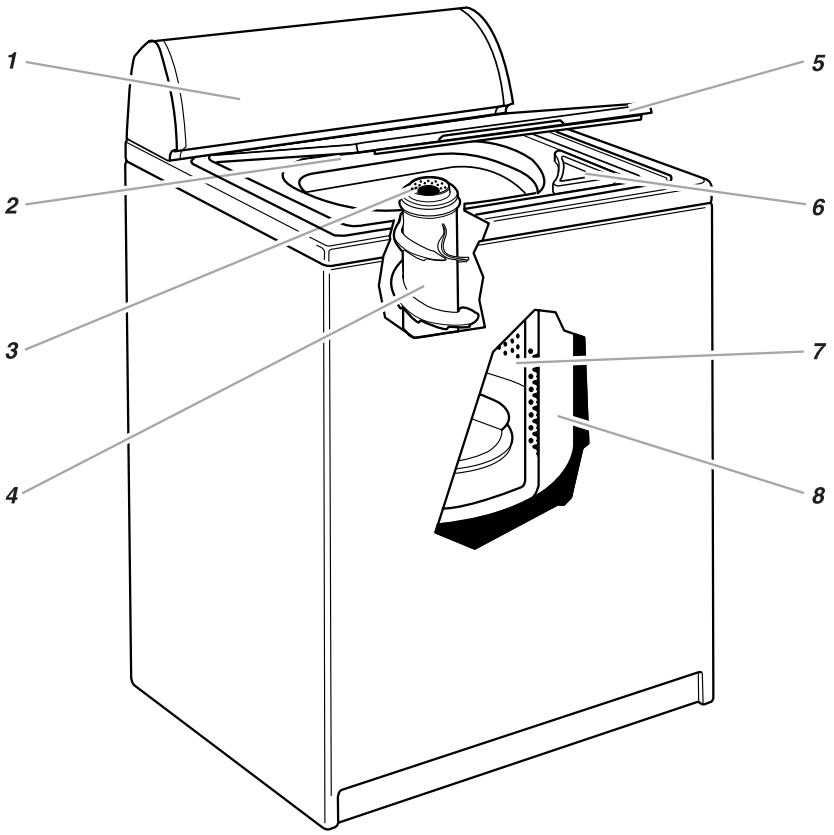

1. Control panel
2. Model and serial number label
3. Liquid fabric softener dispenser†
4. Agitator
5. Lid
6. Liquid chlorine bleach dispenser†
7. Basket
8. Tub

Other features your washer may have

Self cleaning lint filter

CLEANTOUCH™ control panel

XTRA ROLL ACTION™ PLUS agitator

DURASMOOTH™ white porcelain basket

Extra rinse selector

†**On some models**

Control panel

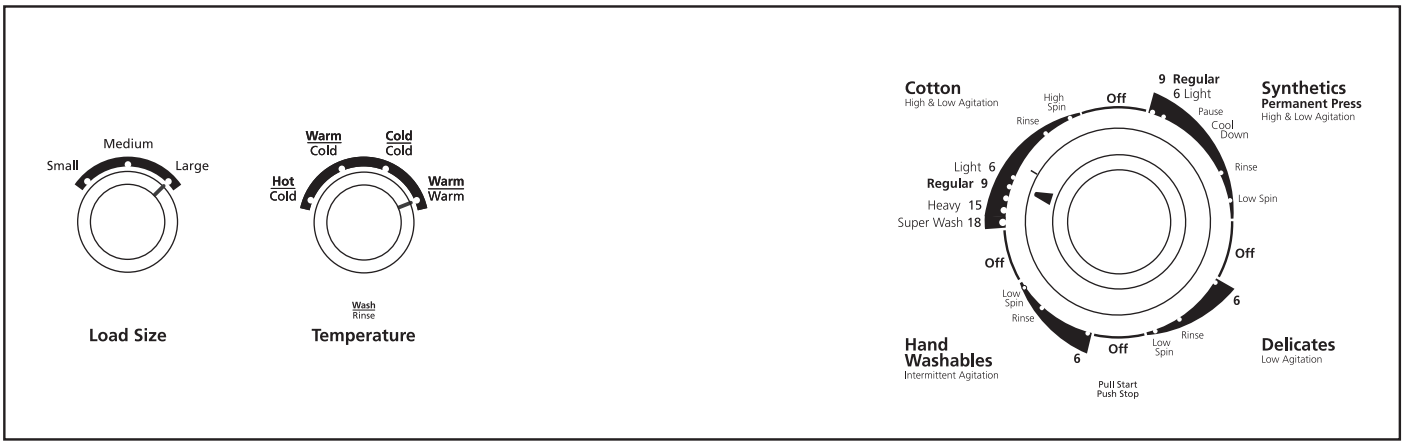

WASHER USE

Understanding Washer Cycles

When the Cycle Control knob is set to a number and pulled out, the washer fills (to the selected load size) before agitation and timing start. The washer begins agitating immediately after filling; agitation occurs with the washer lid down.

During agitation, the agitator creates a continuous rollover action (on some models) that provides a thorough cleaning of the wash load.

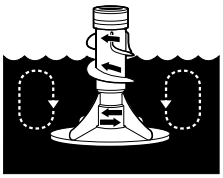

After agitation starts, the Cycle Control knob turns clockwise until it points to an OFF area and the cycle ends.

NOTE: The washer pauses briefly throughout each cycle. These pauses are normal for washer operation.

WASH	RINSE
1. Fill	1. Fill
2. Wash selected time	2. Rinse
3. Drain† No agitation	3. Drain No agitation
4. Spin	4. Spin-Spray rinse
	5. Spin
	6. Off

† The Synthetics/Permanent Press cycle partially drains, fills, agitates briefly, and drains.

Loading

For rated load capacity, refer to the model and serial label/plate, located on your washer as shown in “Parts and Features.”

Loading suggestions

For these suggested full-sized loads, set the LOAD SIZE selector to the highest load size setting.

SUPER CAPACITY PLUS WASHERS

Heavy Work Clothes
3 pair pants
3 shirts
4 pair jeans
1 coverall
1 overall

Delicates
3 camisoles
1 quilted robe
4 slips
4 panties
2 bras
2 nighties
1 baby’s dress

Towels
10 bath towels
10 hand towels
14 wash cloths
1 bath mat

Mixed Load
3 double sheets
4 pillowcases
8 T-shirts
6 pair shorts
2 shirts
2 blouses
8 handkerchiefs

EXTRA LARGE CAPACITY WASHERS

Heavy Work Clothes
2 pair pants
3 shirts
3 pair jeans
1 coverall

Delicates
3 camisoles
4 slips
4 panties
2 bras
2 nighties

Towels
8 bath towels
8 hand towels
10 wash cloths
1 bath mat

Mixed Load
2 double sheets or
1 king size sheet(s)
4 pillowcases
6 T-shirts
6 pair shorts
2 shirts
2 blouses
6 handkerchiefs

Normal Washer Sounds

Your new washer may make sounds your old one didn’t. Because the sounds might be unfamiliar, you may be concerned about them. These sounds are normal.

During washing

When you select a small load size setting, your washer has a lower water level. This can cause a clicking sound from the upper part of the agitator.

During drain

If water is drained quickly from your washer (depending on your installation), you may hear air being pulled through the pump during the end of draining.

After drain and before spin

When the cycle changes from draining to spinning, you may hear gears engaging.

Starting Your Washer

⚠WARNING

Fire Hazard

Never place items in the washer that are dampened with gasoline or other flammable fluids.

No washer can completely remove oil.

Do not dry anything that has ever had any type of oil on it (including cooking oils).

Doing so can result in death, explosion, or fire.

⚠WARNING

Electrical Shock Hazard

Plug into a grounded 3 prong outlet.

Do not remove ground prong.

Do not use an adapter.

Do not use an extension cord.

Failure to follow these instructions can result in death, fire, or electrical shock.

1. Measure detergent and pour it into the washer. If desired, add powdered or liquid color safe bleach. Add extra detergent for the Super Wash cycle.

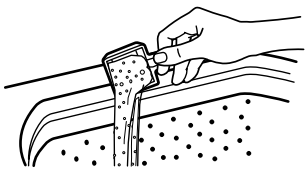

Drop a sorted load of clothes loosely into your washer.

- Load evenly to maintain washer balance. Mix large and small items.
- Items should move easily through the wash water. Overloading can cause poor cleaning.
- To reduce wrinkling of permanent press clothes and some synthetic knits, use a large load size to provide more space (see step 5).

2. (OPTIONAL) Pour measured liquid chlorine bleach into the liquid chlorine bleach dispenser (on some models). Bleach will be diluted automatically during the wash part of the cycle.

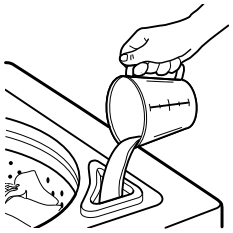

- Never use more than 1 cup (250 mL) for a full load. Use less with a smaller load size.
- Follow the manufacturer's directions for safe use.
- To avoid spilling, use a cup with a pouring spout. Do not let bleach splash, drip, or run down into the washer basket.
- Use only liquid chlorine bleach in this dispenser.

NOTE: On models without a bleach dispenser, see "Adding Liquid Chlorine Bleach."

3. (OPTIONAL) Pour measured liquid fabric softener into the liquid fabric softener dispenser (on some models). Softener is added automatically during the rinse portion of the cycle.

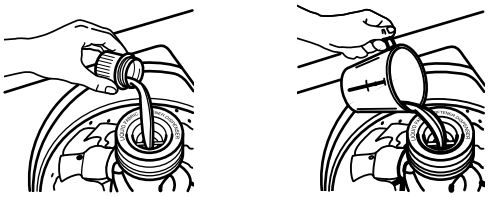

Dilute liquid fabric softener by filling the dispenser with warm water until liquid reaches the crossbar in the opening.

- Do not spill or drip any fabric softener on the clothes.
- Use only liquid fabric softener in this dispenser.

NOTE: On models without a fabric softener dispenser, see "Adding Liquid Fabric Softener."

4. Close the washer lid.

5. Turn the LOAD SIZE selector to the correct setting for your wash load and the type of fabric being washed.

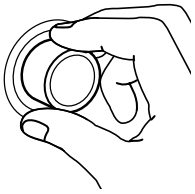

- Choose a load size that allows the load to move freely for best fabric care. See "Loading".
- You may change the load size selection after the washer has started filling by turning the selector to a different setting.

6. Set the TEMPERATURE selector to the correct setting for the type of fabric and soils being washed. Use the warmest water safe for fabric. Follow garment label instructions.

   Your washer uses automatic temperature control (on some models) to maintain a uniform water temperature by regulating the incoming hot and cold water. This helps eliminate undissolved detergent and ensures consistent cleaning results. The cold wash is regulated at approximately 75°F (24°C) by adding small amounts of hot water during the cold fill. The warm wash is maintained at approximately 100°F (38°C).

   NOTE: Make sure that both the hot and cold water taps are fully turned on or the automatic temperature control feature will not work properly.

Water Temp	Use For
Hot 111°F (44°C) or above	Whites and pastels Heavy and greasy soils
Warm 90°-110°F (32°-43°C)	Bright colors Moderate to light soils
Cold 70°-90°F (21°-32°C)	Colors that bleed or fade Light soils

   NOTE: In wash water temperatures colder than 70ºF (21ºC), detergents do not dissolve well. Soils can be difficult to remove. Some fabrics can retain wear wrinkles and have increased pilling (the formation of small lint-like balls on the surface of garments).

7. (OPTIONAL) Some models have an EXTRA RINSE selector. For an additional rinse and spin at the end of a wash cycle, set the EXTRA RINSE selector to ON. On some models, the Extra Rinse feature is part of the cycle.
8. (OPTIONAL) Some models have an END OF CYCLE SIGNAL selector. Set the END OF CYCLE SIGNAL selector to ON if you want your washer to alert you when the wash cycle is complete. The signal is helpful when you are washing items that should be removed from the washer as soon as the cycle ends.
9. Push in the Cycle Control knob and turn it clockwise to the wash cycle you want. Reduce the wash time when using a small load size setting. See “Selecting a Cycle and Time.”

   Pull out the Cycle Control knob to start the washer.

   To stop or restart your washer

   - To **stop** the washer at any time, push in the Cycle Control knob.
   - To **restart** the washer, close the lid (if open) and pull out the Cycle Control knob.

Adding bleach to models without a bleach dispenser

If desired, add measured liquid chlorine bleach after the washer starts agitating. Pour diluted bleach around the agitator, not directly on the load. Undiluted bleach will damage any fabric it touches. (See “Adding Liquid Chlorine Bleach.”)

Adding softener to models without a fabric softener dispenser

If desired, add measured liquid fabric softener to the final rinse water. Always dilute fabric softener with ½ to 1 cup (125 to 250 mL) cup of warm water. Undiluted fabric softener can stain fabrics. (See “Adding Liquid Fabric Softener.”)

Selecting a Cycle and Time

This section describes the available wash cycles and will help you make the best cycle selections for your wash loads. Each cycle is designed for different types of fabric and soil levels.

- The washer pauses briefly throughout each cycle. These pauses are normal. Refer to “Normal Washer Sounds” to learn more about the sounds you may hear during a wash cycle.
- Refer to “Understanding Washer Cycles” to learn what happens during a wash cycle.

NOTE: This manual covers several different washer models. The washer you have purchased will not have all of the cycles described.

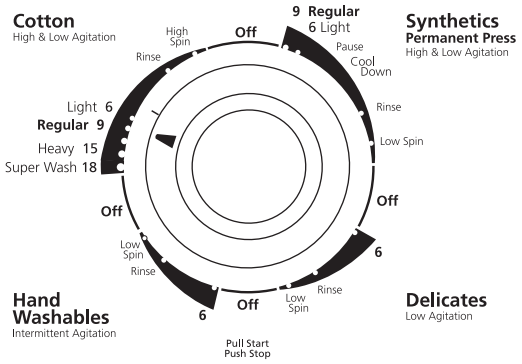

Heavy cycle

This cycle features high-speed agitation followed by brief periods of low-speed agitation for cleaning sturdy fabrics and heavily soiled loads that need maximum soil removal. Select Super Wash or Regular depending on whether your load is moderately or heavily soiled. For improved cleaning, use twice the amount of detergent recommended for a wash cycle. The Heavy cycle features Extra Rinse as part of the cycle.

Cotton cycle

This cycle features high-speed agitation followed by a brief period of low-speed agitation for cleaning cottons and linens. High spin speeds shorten drying time. Select 6 to 15 minutes of wash time, depending on your model, for loads that are moderately or heavily soiled. For lightly soiled loads, use the shortest time setting.

Super Wash - Select the Super Wash setting to wash heavily soiled loads that need maximum soil removal. Use twice the amount of detergent recommended for a wash cycle.

Synthetics/Permanent Press cycle

This cycle starts with high-speed agitation and then steps down to low-speed agitation for cleaning permanent press blends and synthetic fabrics. To minimize wrinkling, this cycle features a cool-down rinse and a low-speed final spin. Select 6 to 10 minutes of wash time, depending on your model, to clean lightly to moderately soiled loads.

Delicates cycle

This cycle features low-speed agitation for gentle soil removal from delicate items and washable knits. Low spin speeds minimize wrinkling. Select 3 to 9 minutes of wash time, depending on your model, to clean lightly to moderately soiled loads.

Hand Washables cycle

This cycle features a series of brief, low-speed agitations and short soaks to gently clean special-care items. Low spin speeds minimize wrinkling. Wash small loads. If items appear to be floating (due to trapped air), stop the washer by pushing in the Cycle Control knob. Push items down into the washer. Restart the washer.

Quick Wash cycle

This cycle features low-speed agitation for gentle soil removal, while providing high spin speeds to shorten drying times. Select this cycle for small loads of lightly soiled items that you need in a hurry.

Soak cycle

This cycle features brief periods of agitation and soak time to remove heavy soils and stains that need pretreatment. Use warm water when soaking laundry. Hot water can set stains. Use the amount of detergent or presoak additive recommended by the manufacturer. When the Soak cycle ends, add detergent and start a new wash cycle.

Prewash cycle

This cycle features a brief period of high-speed agitation to help remove heavy soils and stains that need pretreatment. Use warm water for prewashing stained laundry. Hot water can set some stains. After the Prewash cycle ends, add detergent and select a new wash cycle.

Rinse and Spin

When using extra detergent for heavily soiled clothes, or washing special-care items, you may find an extra rinse and spin is needed.

1. Push in the Cycle Control knob and turn it clockwise to any of the Rinse settings.
2. Pull out the Cycle Control knob. The washer fills to the selected load size, agitates, drains, and spins.

NOTE: An EXTRA RINSE option is available (on some models). See “Starting Your Washer.”

Drain and Spin

A drain and spin may help shorten drying times for some heavy fabrics or special-care items by removing excess water.

1. Push in the Cycle Control knob and turn it clockwise to any of the Spin settings.
2. Pull out the Cycle Control knob. The washer drains, then spins.

Adding Liquid Chlorine Bleach

Always measure liquid chlorine bleach. Do not guess. Never use more than 1 cup (250 mL) for a full load. Follow manufacturer’s directions for safe use. Use a cup with a pouring spout to avoid spilling.

1. Let the washer fill and begin agitating the load.
2. Add bleach to the wash cycle so it can be removed in the rinse cycle. Pour bleach around the agitator, not directly on the load.
   - Follow directions on the care labels. Do not use chlorine bleach on wool, silk, spandex, acetates, or some flame-retardant fabrics.
   - When soaking with chlorine bleach, add detergent to soak water.

NOTE: Undiluted bleach will damage any fabric it touches. The damage appears as rips, holes, tears, or color loss and may not show up until several washings later.

Adding Liquid Fabric Softener

Always dilute fabric softener with ½ to 1 cup (125 to 250 mL) warm water. Undiluted fabric softener can stain fabrics.

- Add diluted fabric softener only in the final rinse.
- Fabric softener should not be mixed with other laundry products. Greasy stains can form. To remove greasy stains, wet the stain and rub with liquid detergent or a bar of soap. Rewash.
- Too much fabric softener can make some items (diapers and towels) nonabsorbent. If this happens, use less fabric softener, or do not use it every time.

Self-Cleaning Lint Filter

Your washer has a self-cleaning lint filter at the bottom of the basket. Wash and rinse water flow over the filter during agitation, separating the lint from the water. The lint spins out of the system during the spin part of the cycle. If your washer drains into a tub, remove any lint collected in the tub or strainer.

WASHER CARE

Cleaning Your Washer

Cleaning the exterior

Use a soft, damp cloth or sponge to wipe up any spills such as detergent or bleach. Occasionally wipe the outside of your washer to keep it looking new.

Cleaning the interior

Clean your washer interior by mixing 1 cup (250 mL) of chlorine bleach and 2 cups (500 mL) of detergent. Pour this into your washer and run it through a complete cycle using hot water. Repeat this process if necessary.

NOTE: Remove any hard water deposits using only cleaners labeled as washer safe.

Cleaning the liquid fabric softener dispenser

Flush dispenser periodically with warm water, as shown. Remove the dispenser by grasping the top of the dispenser with both hands and squeezing and pushing upwards with thumbs. Clean the dispenser by rinsing it under a water faucet. Replace it after cleaning.

NOTE: Do not wash clothes with this dispenser removed. Do not add detergent or bleach to this dispenser; it is for liquid fabric softener use only.

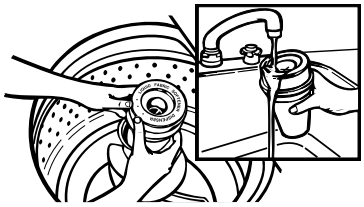

Water Inlet Hoses

Replace inlet hoses after five years of use to reduce the risk of hose failure. Periodically inspect and replace inlet hoses if bulges, kinks, cuts, wear or leaks are found.

When replacing your inlet hoses, mark the date of replacement on the label with a permanent marker.

Vacation, Storage and Moving Care

Install and store your washer where it will not freeze. Because some water may stay in the hoses, freezing can damage your washer. If storing or moving your washer during freezing weather, winterize it.

Non-use or vacation care

Operate your washer only when you are at home. If you will be on vacation or not using your washer for an extended period of time, you should:

- Unplug washer or disconnect power.
- Turn off the water supply to the washer. This helps avoid accidental flooding (due to a water pressure surge) while you are away.

To winterize washer

1. Shut off both water faucets.
2. Disconnect and drain water inlet hoses.
3. Put 1 quart (1 L) of R.V.-type antifreeze in the basket.
4. Run washer on a drain and spin setting (see “Drain and Spin”) for about 30 seconds to mix the antifreeze and water.
5. Unplug washer or disconnect power.

To use washer again

1. Flush water pipes and hoses.
2. Reconnect water inlet hoses.
3. Turn on both water faucets.
4. Plug in washer or reconnect power.
5. Run the washer through a complete cycle with 1 cup (250 mL) of detergent to clean out antifreeze.

TROUBLESHOOTING

First try the solutions suggested here and possibly avoid the cost of a service call...

Washer won’t fill, rinse or agitate

- **Check the following:**
  Is the power cord plugged into a grounded 3 prong outlet?

  Is the indicator on the Cycle Control knob properly lined up with a cycle? Turn the Cycle Control knob to the right slightly and **pull to start.**

  Are the water inlet valve screens clogged?

  Are both the hot and cold water faucets turned on?

  Is the water inlet hose kinked?
- **Does the water level seem too low, or does the washer appear to not fill completely?**
  The top of the agitator is much higher than the highest water level. This creates a perception that the washer is not filling completely. This is normal.
- **Is the lid open?**
  The lid must be closed during operation.

Washer stops

- **Check the following:**
  Is the power cord plugged into a grounded 3 prong outlet?

  Is the indicator on the Cycle Control knob properly lined up with a cycle? Turn the Cycle Control knob to the right slightly and **pull to start.**

  Are the water inlet valve screens clogged?

  Are both the hot and cold water faucets turned on?

  Is the water inlet hose kinked?
- **Is there power at the plug?**
  Check your electrical source or call an electrician.
- **Has a fuse blown or is the circuit breaker open?**
  If problem continues, call an electrician.
- **Are you using an extension cord?**
  Do not use an extension cord.
- **Is the washer in a normal pause in the Synthetics/ Permanent Press (or Hand Washables) cycle?**
  The washer pauses for about 2 minutes in the Synthetics/ Permanent Press cycle**.** Allow the cycle to continue.

  The Hand Washables cycle (on some models) features periods of agitation and soak.
- **Is the washer overloaded?**
  Wash smaller loads.

Washer won’t drain or spin

- **Is the drain hose clogged, or the end of the drain hose more than 72 inches (183 cm) above the floor?**
  See the Installation Instructions for proper installation of drain hose.
- **Is the lid open?**
  The lid must be closed during operation.

- **Is there excessive sudsing?**
  Always measure detergent. Follow manufacturer's directions. If you have very soft water, you might need to use less detergent.
- **Is your voltage low?**
  Check your electrical source or call an electrician. Do not use an extension cord.

Washer continues to fill or drain, or the cycle seems stuck

- **Is the top of drain hose lower than the water level in washer?**
  The top of the hose must be higher than the water level in the washer for proper operation. See the Installation Instructions.
- **Does the drain hose fit too tightly in the standpipe, or is it taped to the standpipe?**
  The drain hose should be loose yet fit securely. Do not seal the drain hose with tape. The hose needs an air gap. See the Installation Instructions.

Washer makes noise

- **Is the load balanced and the washer level?**
  The wash load should be balanced and not overloaded.

  The washer must be level. The front feet should be properly installed and the nuts tightened. Reset the rear leveling legs (if needed). See the Installation Instructions.
- **Did you completely remove the yellow shipping strap with cotter pins?**
  See the Installation Instructions.
- **Are the gears engaging after the drain and before spin, or is the upper part of agitator clicking during wash?**
  These are normal washer noises.

Washer leaks

- **Check the following:**
  Are the fill hoses tight? Are the fill hose washers properly seated? Is the drain hose clamp properly installed? See the Installation Instructions.
- **Is the sink or drain clogged?**
  Sink and standpipe must be able to handle 17 gallons (64 L) of water per minute.
- **Is water deflecting off the tub ring or the load?**
  Center the tub before starting the washer.

  The wash load should be balanced and not overloaded. The fill or spray rinses can deflect off the load.

  The washer must be level. The front feet should be properly installed and the nuts tightened. Reset the rear leveling legs (if needed). See the Installation Instructions.
- **Check household plumbing for leaks.**

Washer basket is crooked

- **Was the washer basket pulled forward during loading?**
  The wash load should be balanced and not overloaded. Push the basket to the center before starting wash.
- **Is the load balanced and the washer level?**
  The wash load should be balanced and not overloaded.

  The washer must be level. The front feet should be properly installed and the nuts tightened. Reset the rear leveling legs (if needed). See the Installation Instructions.
- **The washer basket moves while washing.**
  This is normal.

Agitator operation

- **The top of the agitator is loose, or moves in only one direction.**
  This is normal.

Dispensers clogged or bleach leaking

- **Did you follow the manufacturer's directions when adding detergent and fabric softener to the dispensers**?
  Measure detergent and fabric softener. Carefully pour into the dispensers. Wipe up all spills.

  Dilute fabric softener in the fabric softener dispenser.
- **Did you put powdered or color-safe bleach in the liquid chlorine bleach dispenser?**
  Add powdered or liquid color-safe bleach directly to the basket. Do not use the chlorine bleach dispenser for color-safe bleach.

Load too wet

- **Did you use the right cycle for the load being washed?**
  Select a cycle with a higher spin speed (if available).
- **Did you use a cold rinse?**
  Cold rinses leave loads wetter than warm rinses. This is normal.

Residue or lint on load

- **Did you sort properly?**
  Sort lint givers (towels, chenille) from lint takers (corduroy, synthetics). Also sort by color.
- **Did you overload the washer?**
  The wash load must be balanced and not overloaded. Lint can be trapped in the load if overloaded. Wash smaller loads.
- **Check the following:**
  Was paper or tissue left in the pockets?

  Did you use enough detergent? Follow manufacturer's directions. Use enough detergent to hold the lint in the water.

  Is your water colder than 70°F (21°C)? Wash water colder than 70°F (21°C) may not completely dissolve the detergent.

Stains on load

- **Did you follow the manufacturer's directions when adding detergent and fabric softener?**
  Measure detergent and fabric softener. Use enough detergent to remove soil and hold it in suspension.

  Dilute fabric softener and add to the rinse portion of a cycle only. Do not drip fabric softener on clothes.
- **Is there above average iron (rust) in water?**
  You may need to install an iron filter.
- **Did you properly sort the load?**
  Sort dark clothes from whites and lights.
- **Did you unload the washer promptly?**
  To avoid dye transfer, unload the washer as soon as it stops.

Load is wrinkled

- **Did you unload the washer promptly?**
  Unload the washer as soon as it stops.
- **Did you use the right cycle for the load being washed?**
  Use the Synthetics/Permanent Press cycle or another cycle with low spin speeds (if available) to reduce wrinkling.
- **Did you overload the washer?**
  The wash load must be balanced and not overloaded. Loads should move freely during washing.
- **Was the wash water warm enough to relax wrinkles, or are you using warm rinses?**
  If safe for the load, use warm or hot wash water. Use cold rinse water.
- **Are the hot and cold water hoses reversed?**
  Check to be sure the hot and cold water hoses are connected to the right faucets. See the Installation Instructions.

Load is tangled or twisted

- **Did you overload the washer?**
  The wash load must be balanced and not overloaded. Loads should move freely during washing.
- **Did you wrap items around the agitator?**
  Drop items loosely into the washer. Do not wrap items around the agitator.

Gray whites, dingy colors

- **Did you properly sort the load?**
  Dye transfer can occur when mixing whites and colors in a load. Sort dark clothes from whites and lights.
- **Was the wash temperature too low?**
  Use hot or warm washes if safe for the load. Hot water should be at least 111°F (44°C) to clean heavy or greasy soils.
- **Did you use enough detergent, or do you have hard water?**
  Use more detergent for washing heavy soils in cold or hard water.
- **Are the hot and cold water hoses reversed?**
  Check to be sure the hot and cold water hoses are connected to the right faucets. See the Installation Instructions.

Garment damage

- **Check the following:**
  Were sharp items removed from pockets before washing? Empty pockets, zip zippers, snap or hook fasteners before washing.

  Were strings and sashes tied to prevent tangling?

  Were items damaged before washing? Mend rips and broken threads in seams before washing.
- **Did you overload the washer?**
  The wash load must be balanced and not overloaded. Loads should move freely during washing.
- **Did you properly add chlorine bleach?**
  Do not pour chlorine bleach directly on load. Wipe up bleach spills. Undiluted bleach will damage fabrics.
- **Did you follow the manufacturer's care label instructions?**

ASSISTANCE OR SERVICE

Before calling for assistance or service, please check "Troubleshooting." It may save you the cost of a service call. If you still need help, contact the dealer from whom you purchased the washer, or a Whirlpool designated service company.

When calling, please know the purchase date and the complete model and serial number of your appliance. This information will help us to better respond to your request.

If you need replacement parts

If you need to order replacement parts, we recommend that you only use FSP® factory specified parts. These parts will fit right and work right because they are made with the same precision used to build every new WHIRLPOOL® appliance.

To locate FSP replacement parts in your area:

Contact the dealer from whom you purchased the washer, or a Whirlpool designated service company.