This Owner's Manual is provided and hosted by Appliance Factory Parts.

Appliance Factory Parts
Experts in BBQ, Humidifier, & Appliance Parts
1-800-955-7075

MAJESTIC ROYALTON BC42 Owner's Manual

Shop genuine replacement parts for MAJESTIC ROYALTON BC42

Find Your MAJESTIC Fireplace Parts - Select From 585 Models

-------- Manual continues below --------

PRODUCT SPECIFICATIONS

BC42 Circulating and BR42 Radiant Wood Burning Fireplaces

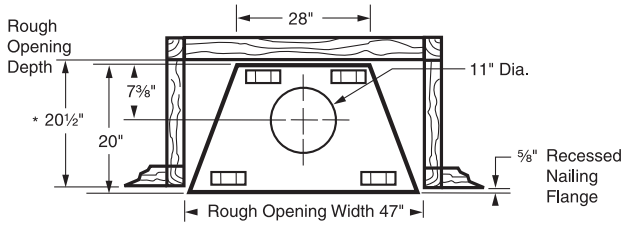

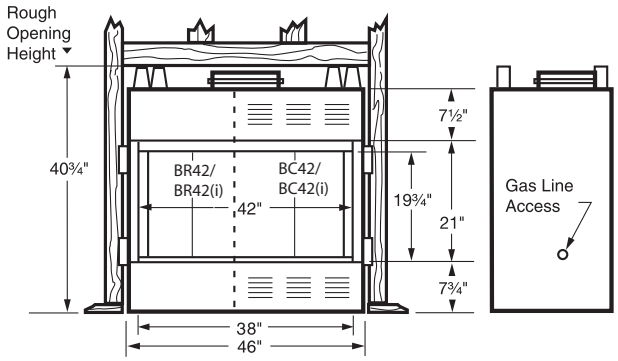

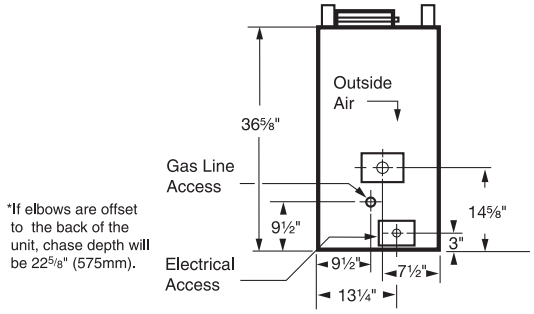

*If elbows are offset to the back of the unit, chase depth will be 22⅝" (575mm).

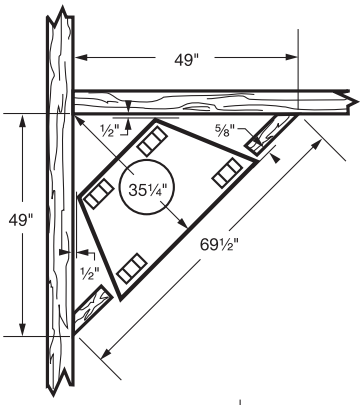

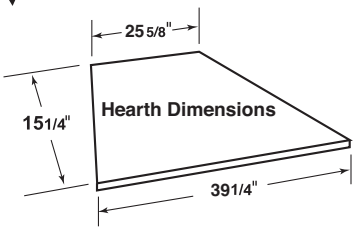

FIREPLACE OPENING

Front opening width: 42"
Front opening height: 21"

TECHNICAL INFORMATION

Flue Series (Std.): SK8 Double Wall
Flue Size: 8" Inner; 11" Outer
Clearance to Chimney Pipe: 1-1/2"
Firestop Framing: 14-1/2" x 14-1/2"
Minimum Flue Height: 12' 6"
Maximum Flue Height: 90'
Minimum Height with 2 Elbows: 14' 6"
Minimum Height with 4 Elbows: 21'
Clearance to Fireplace: 1/2" to sides and back
Minimum Hearth Extension Size: 16" x 48"
UL/ULC Design Certified

FIELD INSTALLED ACCESSORIES

Bi-fold Glass Doors: Brushed Brass, Black, Polished Brass, Pewter
EB1: Electrical Junction Box (BC42 only)
SCVS: Variable Speed Control for Fan (BC42 only)
Fan Kit: FK12 (BC42 only)
Outside Air Kit: AK-MST
Terminations (Std.): SK8 Series RLTSK8, RLTSK8L, PLTSK8, SLTSK8

MADE IN U.S.A.

A Brand of Monessen Hearth Systems Co.
149 Cleveland Drive, Paris, Kentucky 40361
www.majesticproducts.com

To avoid personal injury or property damage, the product described by this brochure must be installed, operated and maintained in strict compliance with the instructions packaged with the product and all applicable building or fire codes. Contact local building or fire officials about restrictions and installation inspection requirements. All photographs and drawings on this brochure are for illustrative purposes only and are not intended for, nor should they be used as a substitute for the instructions packaged with the unit. Appearance and specifications of the product are subject to change without notice. 02/10