This Owner's Manual is provided and hosted by Appliance Factory Parts.

Appliance Factory Parts
Experts in BBQ, Humidifier, & Appliance Parts
1-800-955-7075

MAJESTIC SOVEREIGN SR42 Owner's Manual

Shop genuine replacement parts for MAJESTIC SOVEREIGN SR42

Find Your MAJESTIC Fireplace Parts - Select From 585 Models

-------- Manual continues below --------

SR/SC Series "A"
Woodburning Fireplace

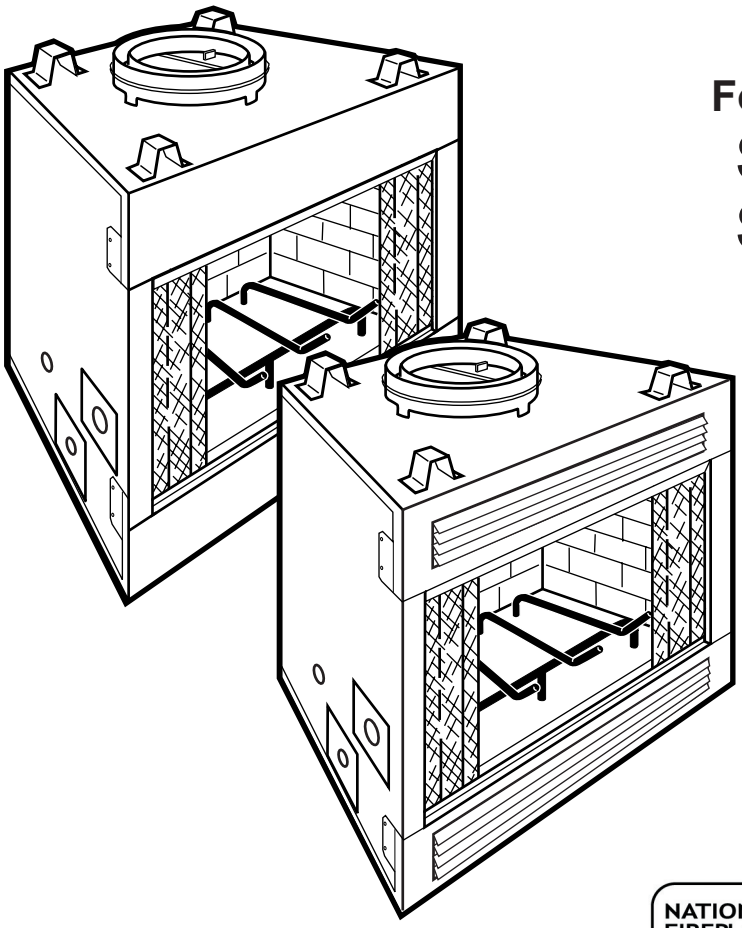

For Models:

SC36A, SR36A
SC42A, SR42A

Homeowner's Installation and Operating Manual

NATIONAL FIREPLACE INSTITUTE
NFI
CERTIFIED
www.nficertified.org

We recommend that our woodburning hearth products be installed and serviced by professionals who are certified in the U.S. by the National Fireplace Institute® (NFI) as NFI Woodburning Specialists or who are certified in Canada by Wood Energy Technical Training (WETT).

Wood Energy Technical Training
www.wettinc.ca

c UL US
LISTED

For use in U.S./Canada
Underwriter's Laboratories Report No. MH7603

DO NOT DISCARD THIS MANUAL: Retain for future use.

7412948 1/11 Rev. 26

Safety Information

PLEASE READ THIS MANUAL BEFORE INSTALLING AND USING FIREPLACE.

IMPORTANT: Read all instructions and warnings carefully before starting installation. Failure to follow these instructions may result in a possible fire hazard and will void the warranty.

Description

The SR/SC Series "A" fireplaces are solid fuel, wood-burning premium fireplaces. The SR36A/42A are radiant clean-face models and the SC36A/42A are circulating models with removable grilles (louvres). Both models are fully insulated fireplaces.

Precautions

MHSC fireplaces and component parts have been highly tested and will operate safely when installed in accordance with instructions provided in this manual. Carefully read and understand all instructions **before** beginning installation.

If you notice any damage to fireplace or component parts, immediately report damage to your MHSC Fireplaces dealer.

Only use MHSC components or the warranty will be voided and a fire hazard may be created.

MHSC warranty will be voided by and MHSC disclaims any responsibility for the following actions:

- **Installation by any other than a qualified installer, preferably NFI or WETT (Canada) certified.**
- **Installation of any damaged fireplace or chimney component;**
- **Modification of fireplace, chimney assembly or any component parts thereof;** (except for chase flashings as detailed in Chimney Top installation instructions).
- **Installation other than as instructed by MHSC; or**
- **Installation and/or use of any component part not manufactured or approved by MHSC in combination or assembly with a MHSC Fireplaces fireplace system, notwithstanding any independent testing laboratory or other third party approval of such component parts or accessory.**

Any such action may possibly cause a fire hazard.

Consult local building codes to ensure that you are in compliance **before** installing the fireplace.

Fireplaces must be vented to the out-of-doors.

Do not obstruct or modify air inlets/outlets in any manner.

Do not install combustible materials on any of the black fireplace surround.

Burn only solid wood fuel or gas logs.

Do not install a solid fuel burning insert or other products not specified for use with this fireplace.

Proposition 65 Warning: Fuels used in gas, wood-burning or oil fired appliances, and the products of combustion of such fuels, contain chemicals known to the State of California to cause cancer, birth defects and other reproductive harm.

California Health & Safety Code Sec. 25249.6

WARNING: Check with your electronics manufacturer before installing a television or other electronic device above this fireplace.

Drafts

The fireplace should not be located in areas that create drafts (ie: frequently opened doors and central heating air inlets/outlets) that hamper the normal flow of air into the fire.

Gas Logs

If you plan to install a gas log, the gas line should be installed **before** framing the fireplace. The gas line must be installed by a certified gas line installer.

SR36A / SR42A
SC36A / SC42A
Listed

UL127 / ULC-S610
Standard for Factory Built Fireplaces

Table of Contents

Safety Information 2
Specifications and Framing 3
Parts Identification 5
Chimney Requirements 6
Planning Information 7
Installation 8
Replacement Parts 19
Accessories 20

SR36A Series Woodburning Fireplace

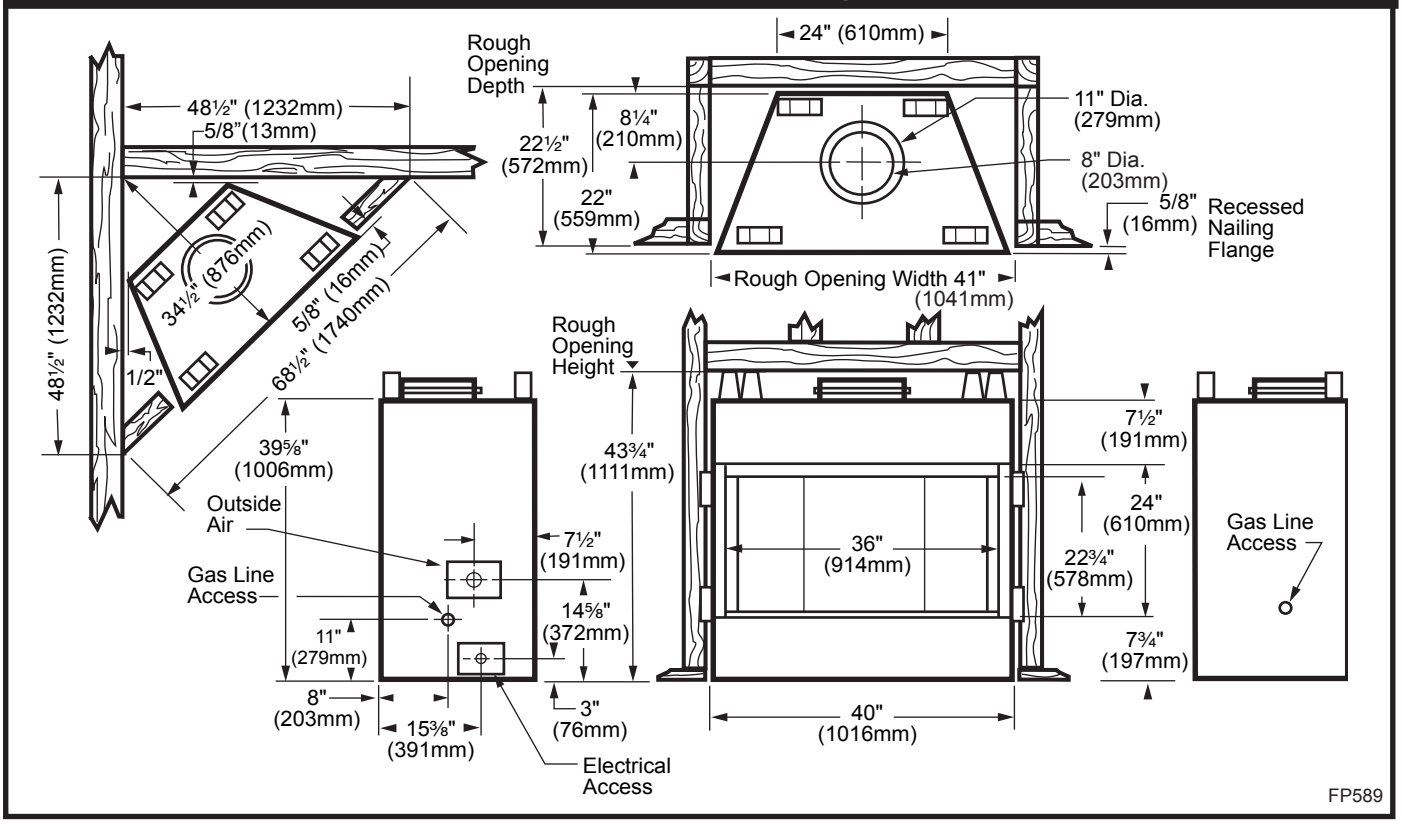

Fig. 1 SR36A Series specifications and framing.

SC36A Series Woodburning Fireplace — Circulating Model

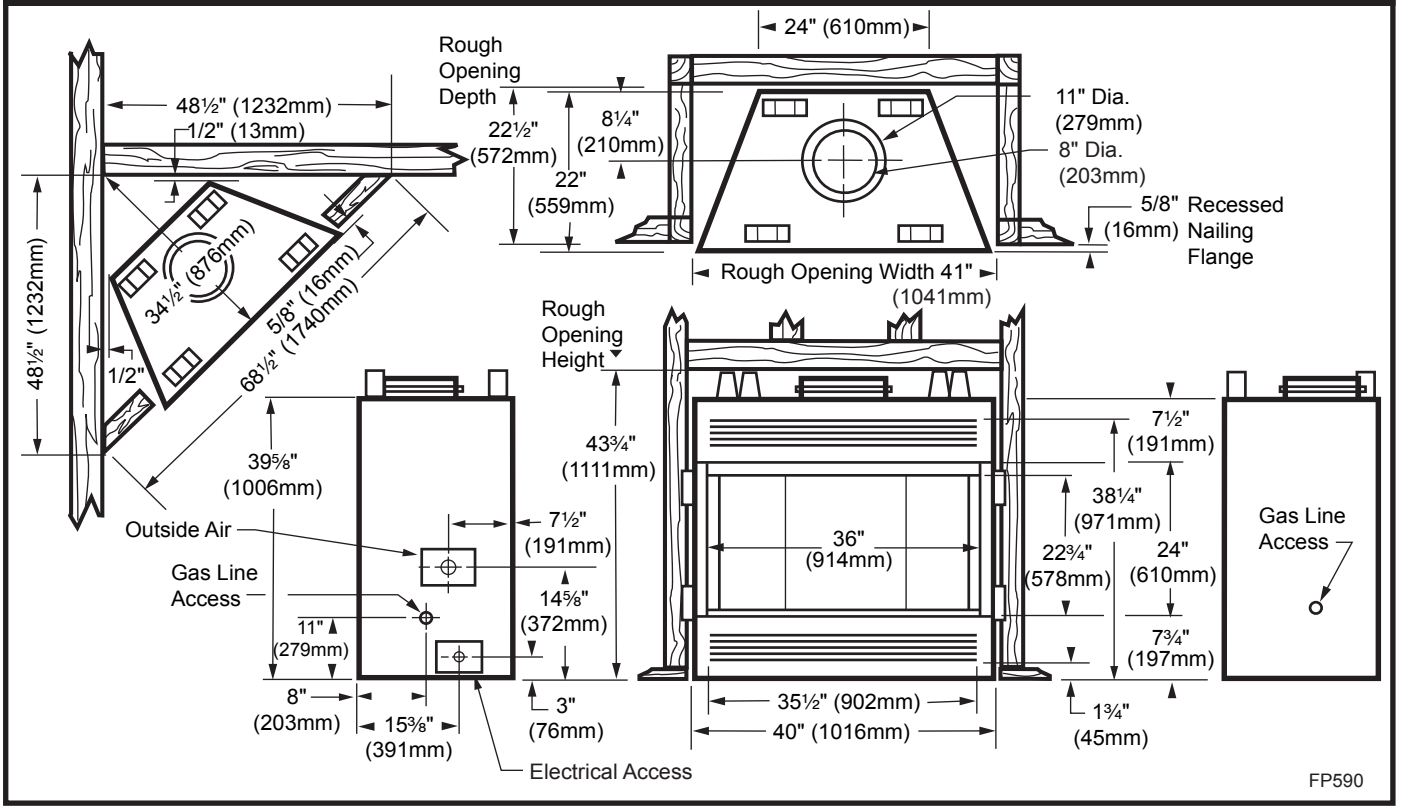

Fig. 2 SC36A Series specifications and framing.

SR42A Series Woodburning Fireplace

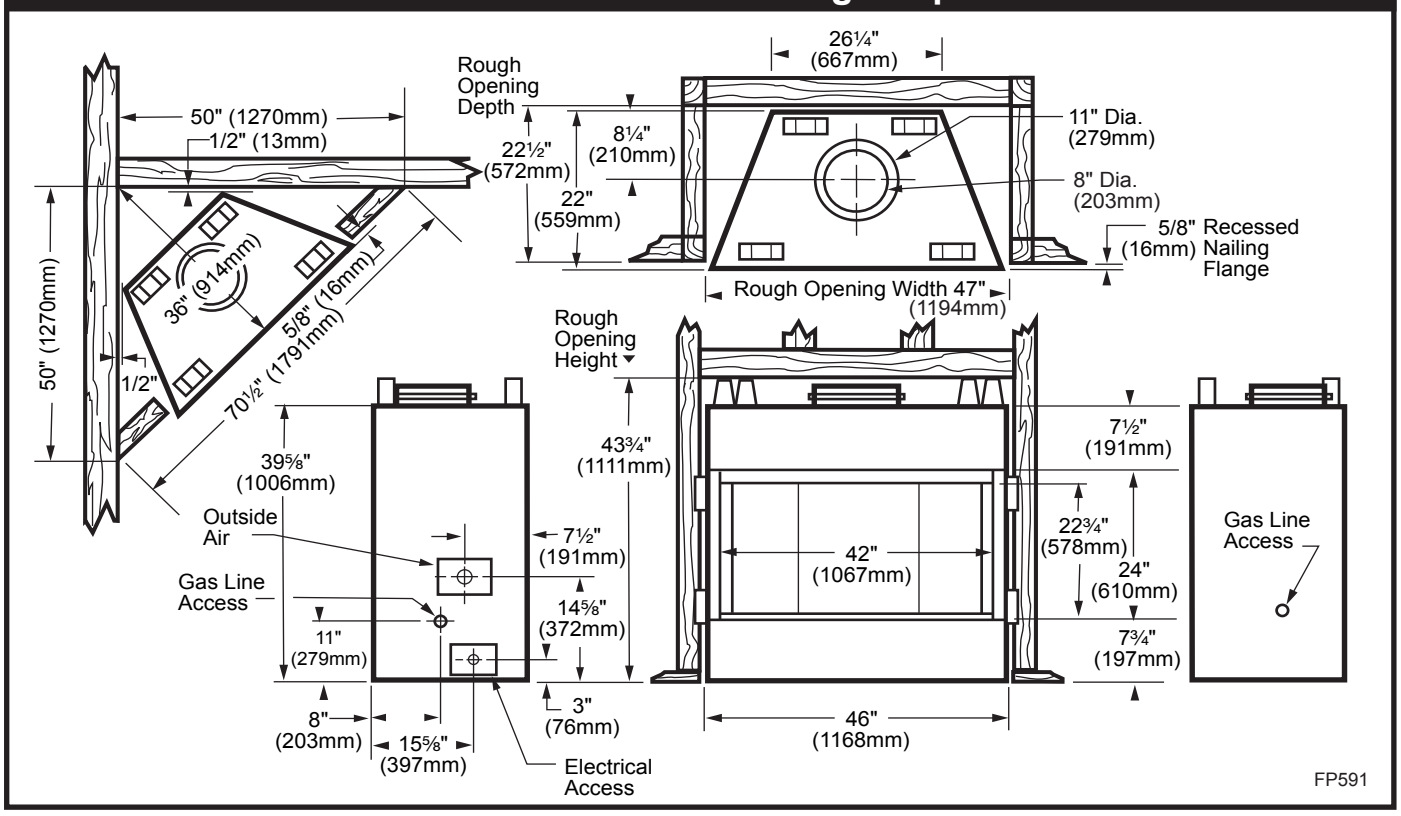

Fig. 3 SR42A Series specifications and framing.

SC42A Series Woodburning Fireplace — Circulating Model

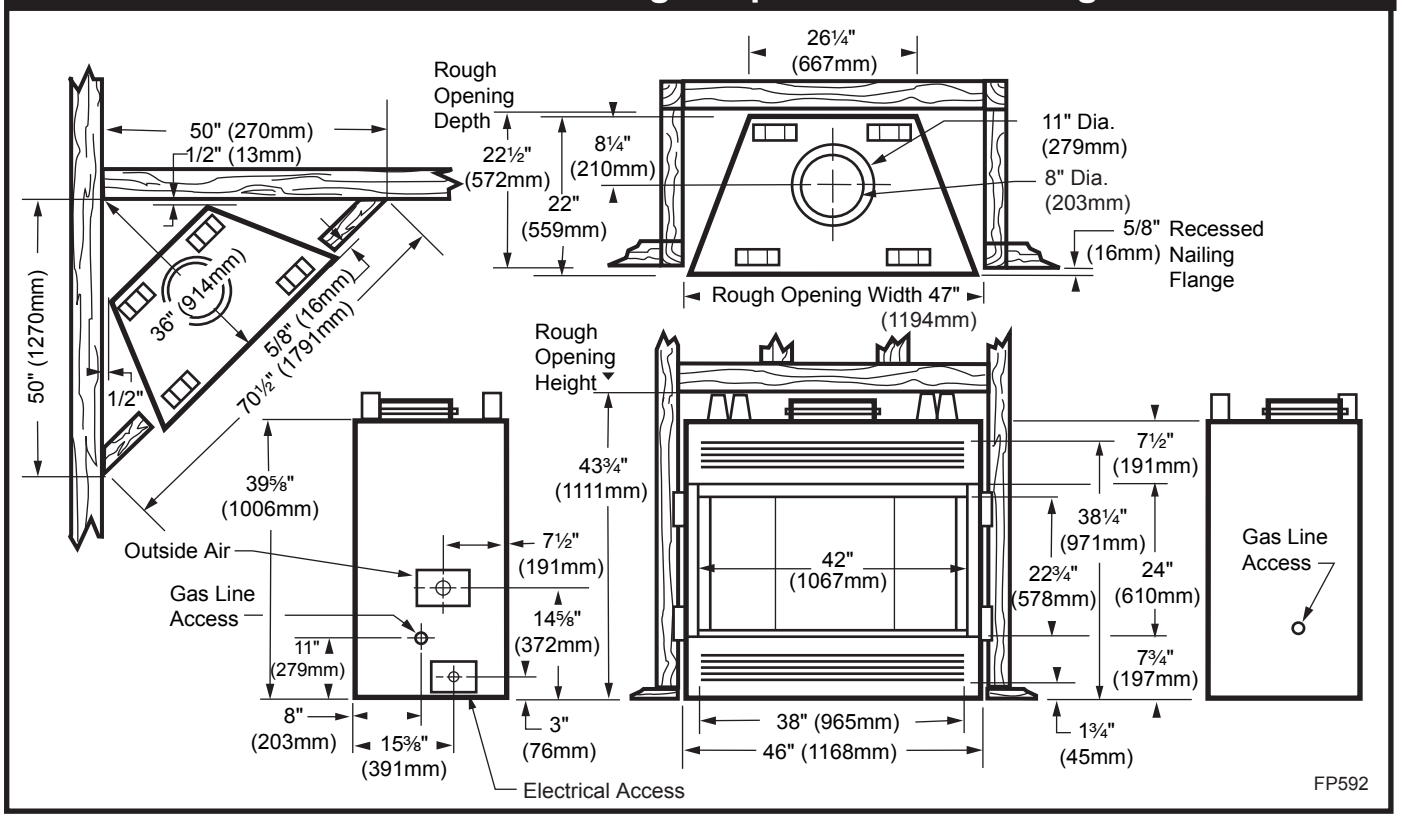

Fig. 4 SC42A Series specifications and framing.

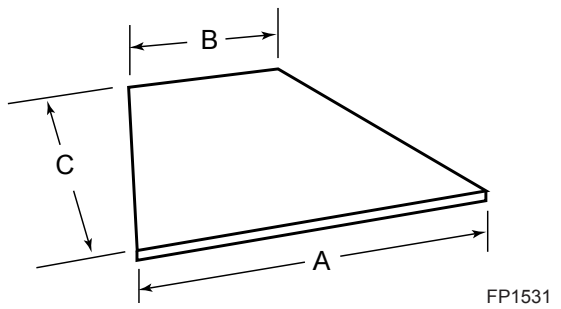

	Front Width A	Back Width B	Depth C
SR/SC36A	31⅛" (791 mm)	19⅞" (505 mm)	15½" (394 mm)
SR/SC42A	36¾" (934 mm)	22⅞" (581 mm)	15½" 394 mm)

Fig. 4a Hearth dimensions.

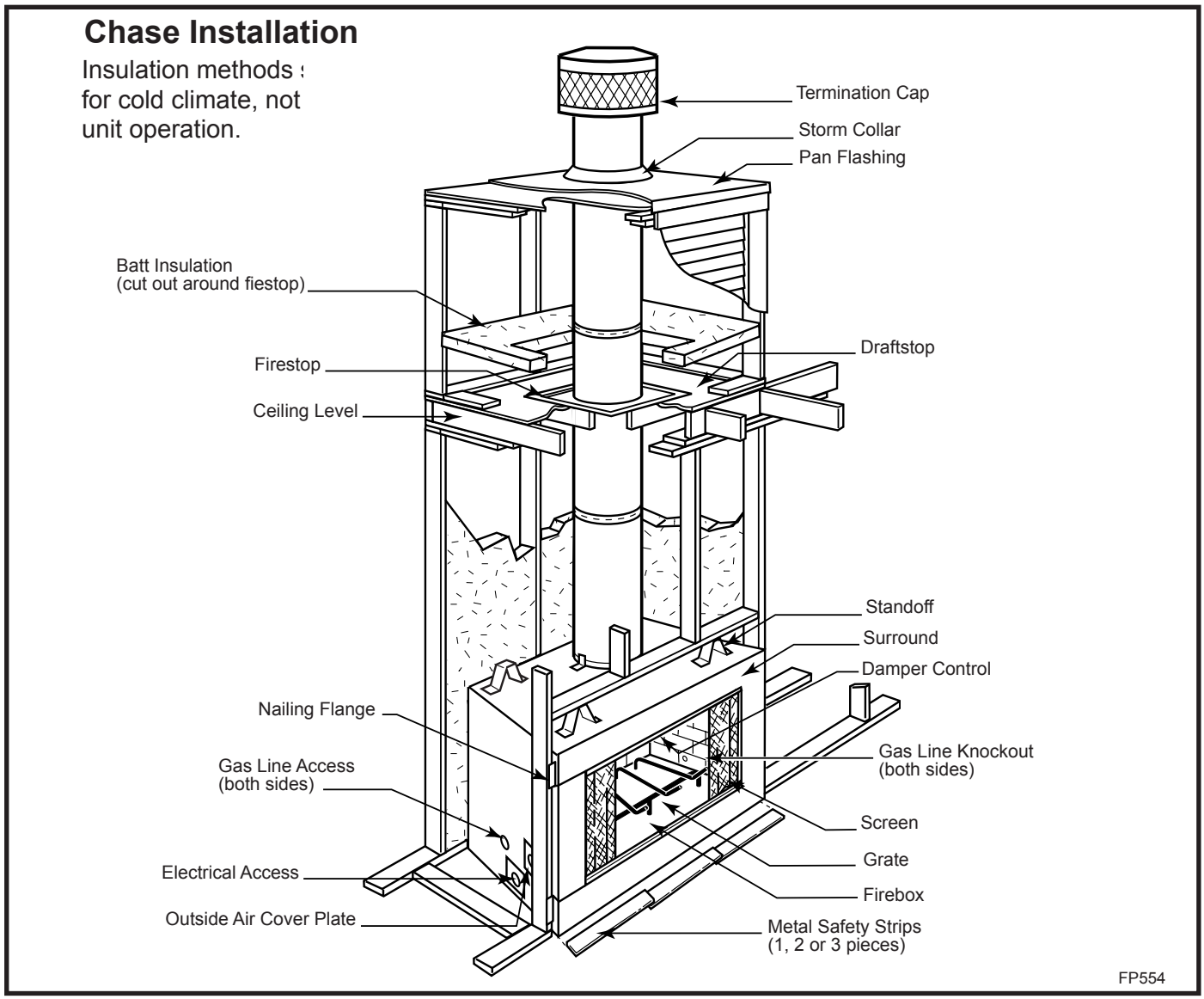

Fig. 5 Fireplace and chase parts identification.

Chimney Requirements - Offset Installations

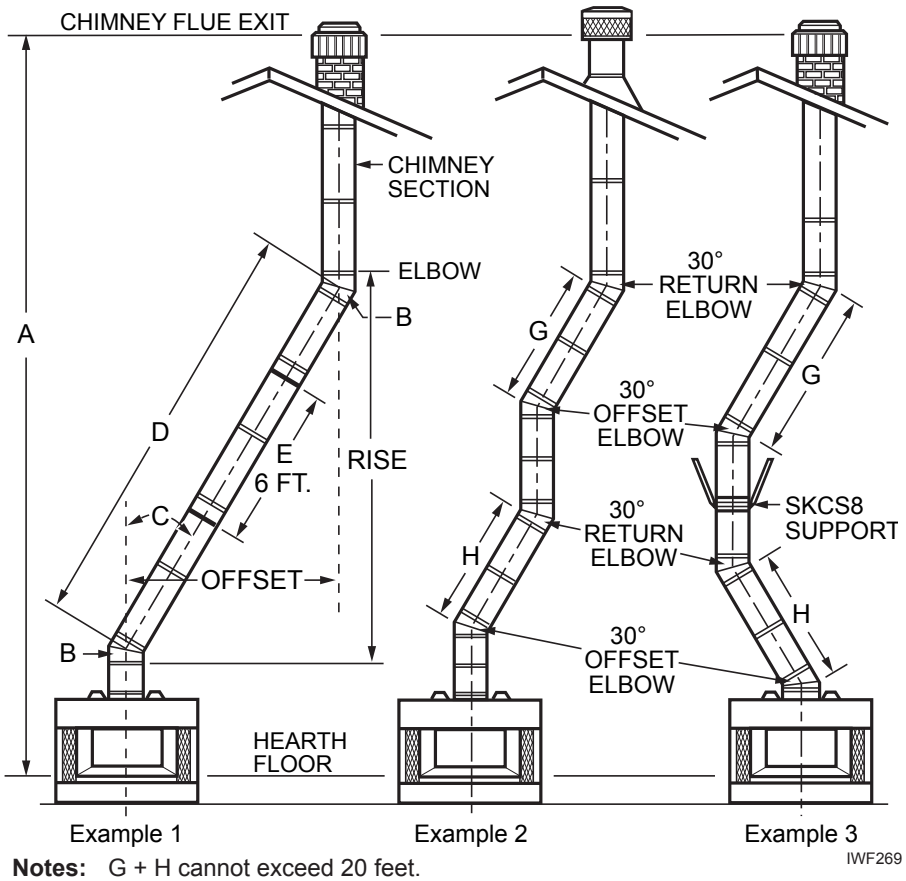

Notes: G + H cannot exceed 20 feet.
Air Space Clearances: SK8 (2-wall) = 1½" and "S" Series (3-wall) = 2"

Illustration Key

The following safety rules apply to offset installations (letters correspond with illustration above):

A. Height of the chimney is measured from the hearth to the chimney exit.

	SR/SC36A	SR/SC42A
Maximum:	90'0"	90'0"
Minimum:		
Without Elbows	12' 6"	12' 6"
With 2 Elbows*	14' 6"	14' 6"
With 4 Elbows*	21' 0"	21' 0"

B. Do not use more than 4 elbows per chimney.

Attach the straps of the return (top) elbow to a structural framing member.

The offset (first) elbow of any pair does not have straps.

C. The chimney cannot be more than 30˚ (45˚ in Canada) from the vertical plane in any installation*.

D. The maximum length of the angled run of the **total** chimney system is 20 feet. (G plus H cannot exceed 20 feet.)

E. A chimney support (Model SKCS8) is required every 6 feet of angled run of chimney. Chimney supports are required for every 30 feet and 60 feet (SK8 pipe) or 20 feet and 40 feet (3-wall pipe) of vertical chimney height above the hearth.

Determine the offset distance of your chimney arrangement from the centerline of the fireplace to the centerline of the chimney where it is to pass through the first ceiling.

NOTE: This offset distance may not be your full offset distance. See Examples 2 and 3.

* In Canada, two (2) SK845 are allowed.

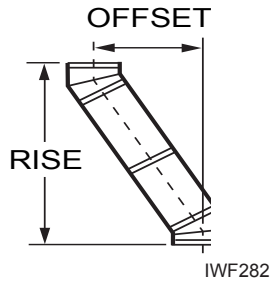

30° Elbow Offsets

1'	1½'	3'	4'	Chimney Support	Offset	Rise
0	0	0	0	0	3"	11"
1	0	0	0	0	8¼"	20"
0	1	0	0	0	11¼"	25¼"
2	0	0	0	0	13½"	29¼"
1	1	0	0	0	16½"	34¼"
0	0	1	0	0	20¼"	40¾"
2	1	0	0	0	21¾"	43½"
0	0	0	1	0	26¼"	51¼"
0	1	1	0	0	28½"	55¼"
1	0	0	1	0	31½"	60¼"
0	1	0	1	0	34½"	65½"
0	0	2	0	0	37½"	70¾"
1	1	0	1	1	41½"	77¾"
0	0	1	1	1	45"	83¾"
0	1	2	0	1	47¼"	87½"
0	0	0	2	1	51"	94"
0	1	1	1	1	53¼"	98"
0	0	3	0	1	56¼"	103¼"
0	1	0	2	1	59¼"	108½"
0	0	2	1	1	62¼"	113½"
0	1	3	0	1	64½"	117½"
0	0	1	2	1	68¼"	124"
0	1	2	1	1	70½"	128"
0	0	0	3	1	74¼"	134½"
0	1	1	2	2	78"	140¾"
0	0	3	1	2	81"	146"
0	1	0	3	2	84"	151¼"
0	0	2	2	2	87"	156½"
0	1	3	1	2	89¼"	160¼"
0	0	1	3	2	93"	166¾"
0	1	2	2	2	95¼"	170¾"
0	0	0	4	2	99¼"	177¾"
0	1	1	3	2	101¼"	181¾"
0	0	3	2	2	104¼"	186¼"
0	1	0	4	2	107¼"	191½"
0	0	2	3	2	110¼"	196¾"
0	1	3	2	3	114"	203¼"
0	0	1	4	3	117¾"	209¾"
0	1	2	3	3	120"	213½"
0	0	0	5	3	123¾"	220"

Fig. 6 Chimney system requirements.

Planning Information

Preplanning an installation is very important to ensure safety and to save time and money. An installer must predetermine where a fireplace will be set and how the chimney system will be run.

Mounting the Fireplace

A fireplace may only be mounted on the following surfaces:

1. A flat combustible surface.
2. A raised wooden platform.
3. A concrete block or other solid object placed beneath each of the four (4) corners of the fireplace.

The fireplace **must** be spaced 1/2" (13 mm) from a combustible back wall and 1/2" (13 mm) from a combustible side wall or support. (Page 14, Fig. 20)

Planning the Chimney Run

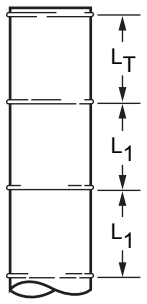

MODEL SK 2 WALL CHIMNEY	TOTAL LENGTH (L_T)	INSTALLED LENGTH (L_1)
SK81	11½"	10½"
SK818	17½"	16½"
SK83	35½"	34½"
SK84	47½"	46½"

WF288

Fig. 7 Installed lengths of chimney sections.

Determine how the chimney will be run, length of run and chimney components required to complete the job. (Fig. 6) **Never** install a chimney below minimum heights.

In planning a chimney system, it is important to know:

1. The height of a chimney is measured from the hearth to the exit point on the termination.
2. A chimney cannot be offset more than 30° from a vertical plane.
3. A chimney may run straight up or it may be necessary to offset it to avoid obstructions.
4. The maximum length of an angled run (total chimney system) is 20' (6m).
5. No more than 2 offsets (4 total 30° elbows in U.S./or 2 total 45° elbows in Canada) per fireplace may be used.
6. A guy wire stabilizer is required for chimneys extending more than 6' (1.8m) above a roof line.

The Ten Foot Rule

Major U.S. building codes specify a minimum chimney height above the roof top. The “Ten Foot Rule” is a fire safety rule and not a draft rule. To ensure proper draft, it is recommended that you always meet or exceed the “Ten Foot Rule,” especially when installing a termination on a high pitch roof. (Fig. 8)

The key points of the "Ten Foot Rule" are:

1. If the horizontal distance from the chimney to the peak of the roof is 10' (3m) or less, the top of the chimney must be at least 2' (610mm) above the peak of the roof, but never less than 3' (914mm) in height above the highest point where it passes through the roof.
2. If a horizontal distance from the chimney to the peak of the roof is more than 10' (3m), a chimney height reference point is established on the surface of the roof a distance of 10' (3m) from the chimney in a horizontal plane. The top of the chimney must be at least 2' (610mm) above the reference point, but never less than 3' (614mm) in height above the highest point where it passes through the roof.

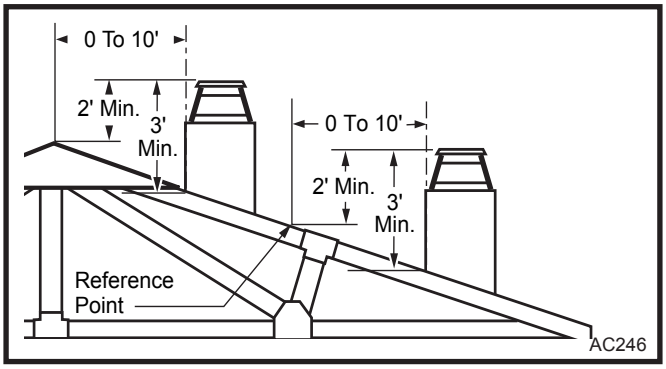

Fig. 8 Ten Foot Rule illustration.

Chimney Supports

The chimney system is supported by the fireplace for vertical chimney heights less than 30' (9m) above the hearth. Chimney supports are required if the vertical height exceeds 30' (9m) with SK8 chimneys or 20' (6m) with 3-wall chimneys. Locate chimney supports at ceiling holes or other structural framing at 30' (9m) (SK8) or 20' (6m) (3-wall) heights. Spacing between chimney supports **must not** exceed 30' (9m) (SK8) or 20' (6m) (3-wall). Use Chimney Support Model SKCS8. **(NOTE: The SKCS8 can not be mounted directly to the fireplace.)** Support provided by elbow straps fulfills the support requirement only if they are spaced as previously described. (A chimney support is 2½" (64mm) long when installed.)

Angled chimney runs require a support every 6' (1.8m) in addition to the elbow straps. Chimney supports are used for this function. (Fig. 9)

Chase Installation

A chase is a vertical box like structure which encloses the fireplace and/or chimney. Chases are typically built on the outside of the house with fireplace opening cut into the outer wall of a room. (Page 5, Fig. 5)

If you need help in determining fireplace location or how the chimney system should be run, contact your MHSC Fireplaces dealer for assistance.

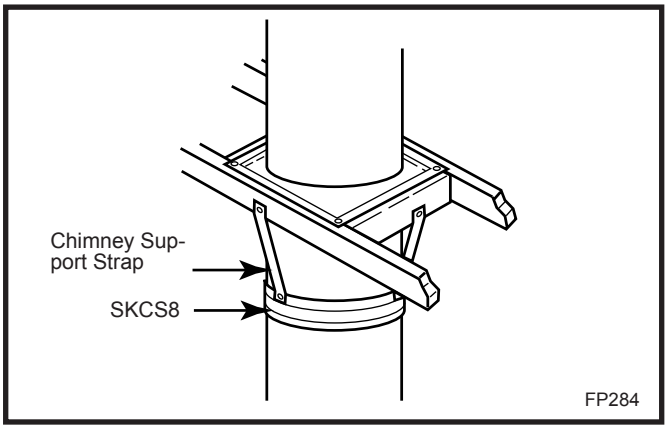

Fig. 9 Chimney support installation

Installation

Insulating Fireplace Enclosure for Cold Climates

If you live in a cold climate, it is not required but **highly recommended** that you insulate fireplace enclosure to eliminate cold air penetration as much as possible.

Insulate base of fireplace with a noncombustible insulation rated for a minimum of 300°F. Insulating is **very important** for outside wall installations over a concrete slab. If fireplace is installed on a platform, insulation should be placed on top of the platform **before** fireplace is set. (Fig. 10)

When a fireplace is installed in a chase or on an outside wall, enclosure should be treated like any outside wall in a home. Insulation should be installed on the inside wall as well as the outside wall(s). In a chase, it is also a good idea to install a firestop at the first ceiling level above the fireplace and enclose the chase with sheeting material. Insulation may then be installed above sheeting material to assure the space around the fireplace is totally protected. (Fig. 5)

When installing the chimney, **DO NOT** caulk between outer pipe and firestop. It is vital that some air be allowed to flow through this very thin gap.

CAUTION: WHEN INSTALLING A FIREPLACE IN AN INSULATED ENCLOSURE, BE SURE ALL REQUIRED AIR SPACES ARE MAINTAINED. (Page 14, Fig. 20)

Framing

Framing can be constructed before or after the fireplace is set in place, however, most installers build the frame before setting the fireplace.

Frame fireplace with 2 x 4 lumber or heavier materials. Refer to framing dimensions in Figures 1, 2, 3 or 4 for basic fireplace specifications.

NOTE: Framing should be positioned to accommodate wall covering and fireplace facing material.

Installing Electrical Wire (for Circulator Models)

If a circulating fireplace is to be installed, run the 120 VAC, 60 Hz wiring to the left side of installation. Wiring must be completed **before** the fireplace is secured and finish material applied.

Remove the cover plate and electrical knockout on the lower left side of the fireplace and set aside. Follow the instructions on Page 10 for proper wiring and installation of the EB1.

If the fan kit is not being installed with the fireplace, it is highly recommended that 120 VAC supply be made available since someone may elect to install a blower at a later date.

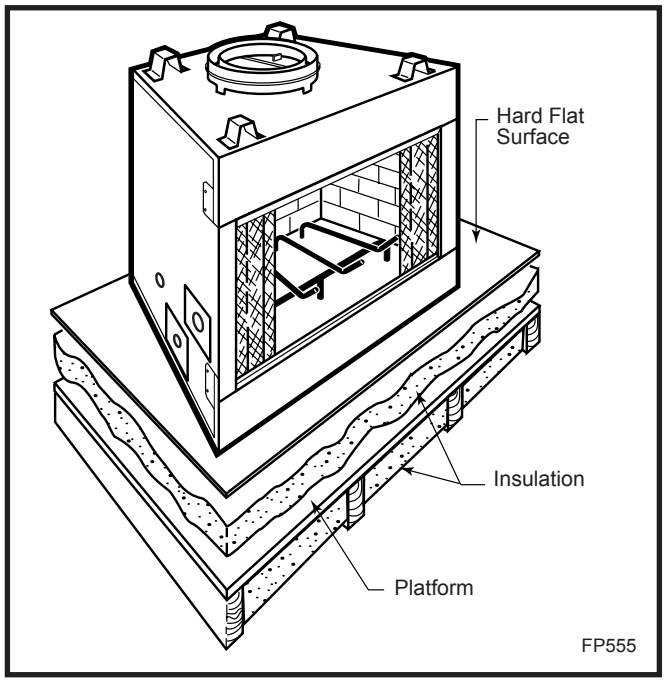

Fig. 10 Insulating between platform and fireplace.

Option For Circulating Models Only —

EB1 (Receptacle) Hook-Up

- Wiring should be installed by a certified electrician.
- Turn off circuit breaker before wiring models.

Once fireplace is secured, complete wiring the fan kit. Remove knockout in the center of the back of the EB1 and install listed cable clamps. Feed electrical wire through listed cable clamp leaving approximately six (6) inches of wire exposed through the EB1. Secure listed cable clamp to the wire.

Attach white wire from power source to one (1) wire of receptacle and secure with nut. Attach black wire from power source to the other wire of receptacle and secure with nut. Be sure nuts are secured tightly.

Secure EB1 assembly to inside of electrical box coverplate using two screws. Attach cover to face of the EB1 while being careful to position excess wire completely within the EB1, then attach coverplate to fireplace.

Install Fan Kit Assembly

Refer to optional Model FK12 fan kit assembly installation instructions for field installation.

Chimney Setup

Since you have already preplanned the chimney run, you should know exactly how the installation is to be accomplished — how much pipe is required, the number of elbows, if any, and type of termination to be used.

CAUTION: REPORT TO YOUR DEALERS ANY PARTS DAMAGED IN SHIPMENT, SPECIFICALLY CHECK THE END CONNECTION OF CHIMNEY SECTIONS AND ELBOWS.

NOTE: Fireplaces may use MHSC model SK8, or Model S (three wall) chimney systems. The SR/SC Series "A" Fireplace will accept the SK8 chimney system as is; but a TWABR adapter collar is required when using the Model S (triple wall) chimney system. The installation procedure described in this manual applies **only** to the SK8 system. Either chimney system may be used, but **may not** be mixed.

Straight-Up Chimney Installation

To mark the centerline of the flue, put the fireplace in final position and measure out from the wall: 9¼" (235mm). Mark a spot on the ceiling directly above the fireplace. Draw a line parallel to the back wall through this mark. (Fig. 11)

Using a plumb bob positioned directly over center point of fireplace flue collar, mark the ceiling to establish the chimney center point. (Fig. 11)

Offset Installation

In order to clear an obstruction, it may be necessary to offset chimney from vertical. This is accomplished by using MHSC elbows. Use the *30° Offset Elbow* table on Page 6 to determine proper offset and parts required.

Each offset requires two (2) elbows. The second elbow is equipped with support straps. It is very important to install the second elbow in each offset as close to the ceiling or support as possible so that the elbow straps can be secured to framing members to help support the weight of the chimney.

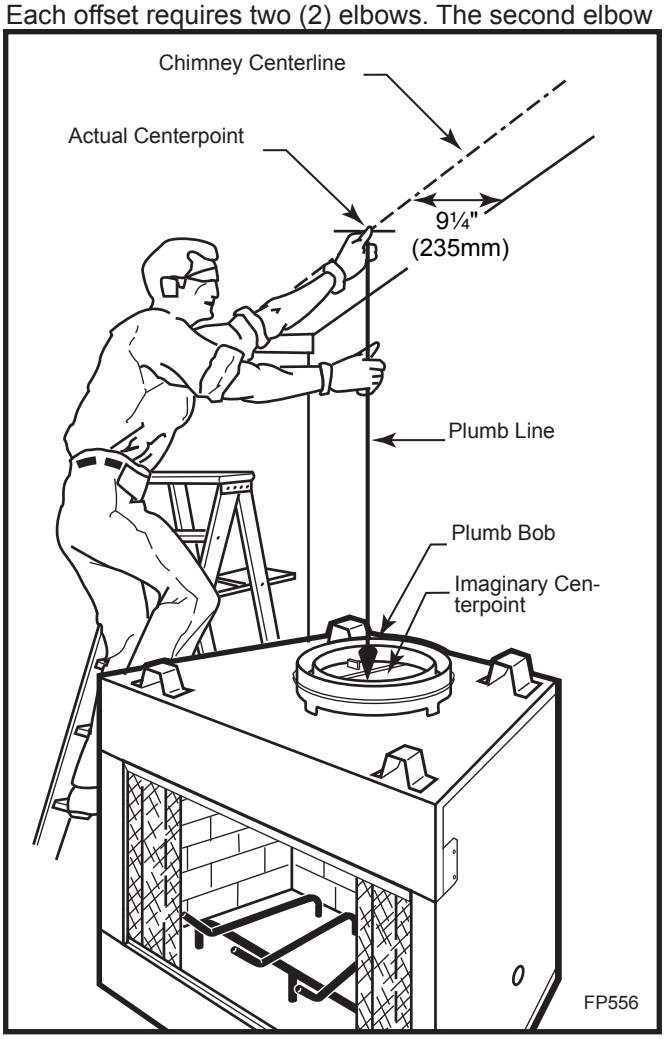

Fig. 11 Locate centerline of chimney with plumb line.

Determine offset distance of your chimney arrangement from centerline of fireplace to centerline of chimney where it is to pass through ceiling.

Locate center point of the chimney on ceiling as though a straight up chimney arrangement is to be used. Measure your offset dimension from straight up chimney center point on ceiling.

Ceiling Chimney Hole/ Possible Obstructions

The size of the hole in ceiling will vary with the angle at which the chimney passes through ceiling.

Drive a nail up through ceiling at marked chimney center point. Go to floor above and see where hole will be cut. Check to see where existing ceiling joists and other possible obstructions are located...i.e. wiring, plumbing etc... If necessary, reposition chimney and/or fireplace to avoid obstructions.

Cutting the Hole

Cover fireplace collar opening and cut proper sized chimney hole in chimney. The SK8 pipe allows you to run pipe through a typical 16” on center joist without cutting joists.

Framing the Ceiling Hole

Frame the ceiling chimney hole as shown in Figure 12. It is good practice to use framing lumber that is the same size as the ceiling joists; this is a requirement at attic level.

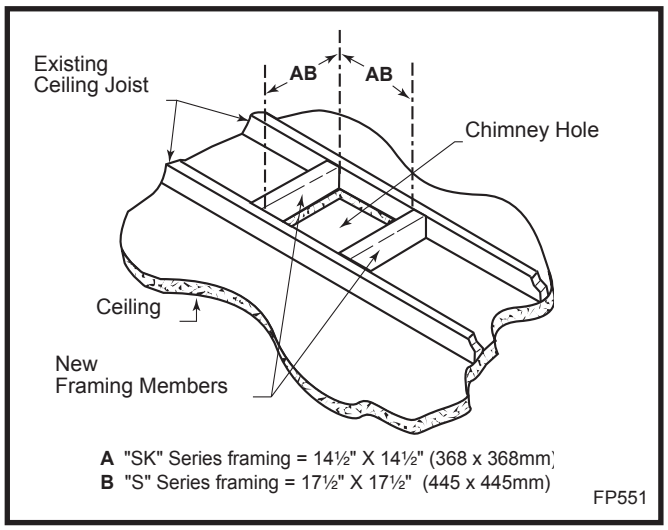

Fig. 12 Typical frame for ceiling chimney hole.

The following table gives firestop spacer model numbers:

Size of Chimney	Angle of Chimney at Ceiling	
	Vertical	30°
8" Flue "SK" Series	SKFS2A 14½" x 14½" (368mm x 368mm)	SKFS6A 14½" x 25½" (368mm x 648mm)
8" Flue "S" Series 3-Wall	FS2A 17½" x 17½" (445mm x 445mm)	FS6A 17⅞" x 29⅝" (454mm x 753mm)

Fig. 13 Ceiling chimney hole sizes necessary for installing firestop spacer.

The **inside dimension** of the frame **must be** the same as the hole size selected from Figure 13 in order to provide required the 1½" (38mm) of air space between the outside diameter of the chimney and the edges of the framed ceiling hole.

Positioning, Safety Strips, Securing the Fireplace

Slide fireplace into position.

Lift the fireplace front slightly and slide the metal safety strips under front bottom edge about 1½" (38mm), allowing the remainder to extend in front of firebox. Overlap strips at least 1/2" (13mm) to provide a positive joint. (Flat safety strips are packed with fireplace.) (Fig. 14)

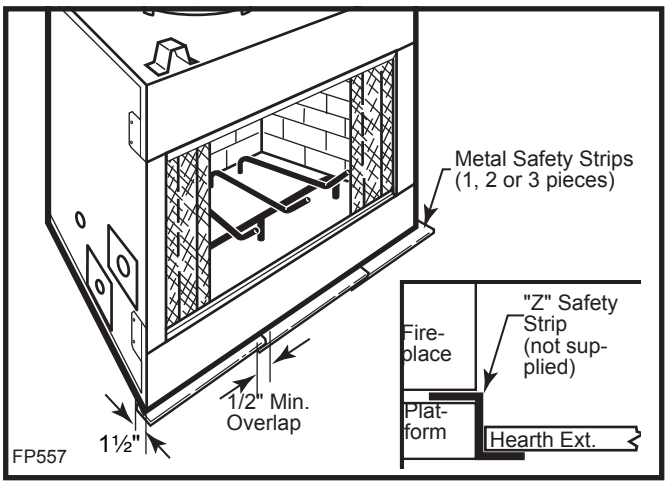

Fig. 14 Safety strip installation.

Safety strips are used to ensure that any combustible materials in front of the fireplace are protected even though a noncombustible hearth extension is required.

If fireplace is to be elevated above the floor, a "Z" shaped metal safety strip must be fabricated and used to protect combustible surfaces in front of the fireplace. This "Z" shaped safety strip is not provided but must be fabricated of metal with each horizontal leg at least 1½" (38mm) wide and equal in length to the metals strips provided with the fireplace.

NOTE: Safety strips are not required over noncombustible floors where all supports at the base of the fireplace are noncombustible.

Four (4) nailing flanges are incorporated on each corner of the surround. Bend the nailing flanges out, level the box, then secure it firmly in place by nailing the flanges to the framing members as shown in Figure 15.

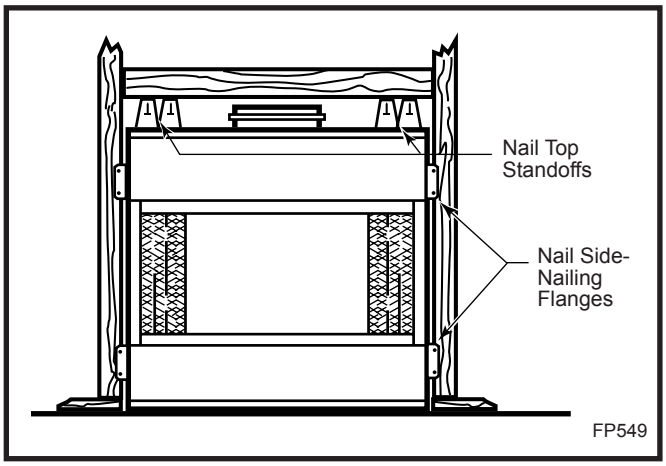

Fig. 15 Fasten fireplace in position.

Installing Outside Air Kit

An outside air kit is installed in all SR/SC Series Fireplaces. If desired, or if local codes mandate the use of an air kit, then an AK-MST is required to complete the installation (from air kit to the outdoors). If the outside air kit is to be used, the AK-MST **MUST** be installed **BEFORE** the fireplace is enclosed. Refer to the AK-MST instructions for field installation.

NOTE: For Canada installations, model CCE-SK Chimney Collar Enclosure must be used on this fireplace with Model SK8 double wall chimney systems.

Installing the Chimney System

Start by attaching the first chimney section to the collar on top of the fireplace.

Install the pipe as pictured in Figure 16. When you get a good lock, you will hear the pipe clearly snap together. Once sections are snap-locked in place, it is extremely difficult to get them apart. **Make sure the pipe is firmly snapped and locked together as each pipe section is mounted.**

When installing elbows, only outer pipe will snap-lock. Middle pipes simply slide into position. Be sure to always attach straps on upper elbow to a structural framing member. (Fig. 17)

Continue installing the pipe as required until pipe is installed up through the ceiling. At this point, you must install a firestop spacer.

Installing the Firestop Spacer in the Ceiling Hole

A firestop spacer is used to keep pipe spaced properly and required for safety.

Nail the firestop spacer (at each corner) to the framing members of the ceiling hole. **NOTE:** A firestop spacer is not required at the roof.

Hole sizes listed in Figure 13 for angled firestop spacers provide minimum required air space to chimney pipe for ceiling thickness up to 8" (203 mm). When combined thickness of ceiling material, ceiling joists and flooring material exceeds 8" (203 mm), adjustments must be made in framing to assure that minimum air spaces to chimney are maintained.

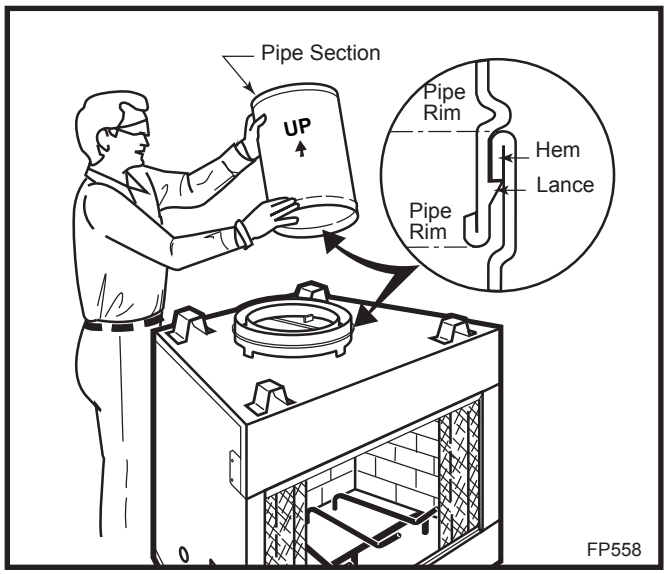

Fig. 16 Install pipe, listening for the snap-lock to fasten.

Proper Firestop Spacer Installation

Figure 18 shows different installation procedures for both an area that *is* an attic and an area that *is not* an attic.

If the area above the ceiling **is not** an attic, position the firestop spacer with the flange on the ceiling side and the angled portion extending up into the hole.

If the area above the ceiling **is** an attic, position the firestop spacer with the flange on the top of the framed hole and the angled portion extending down into the hole.

Firestop spacers are not available for nor are they required on vertical walls.

DO NOT put any sealant around the area where the outer pipe slides through the firestop spacer. If you seal this area, **it may cause a fire hazard.**

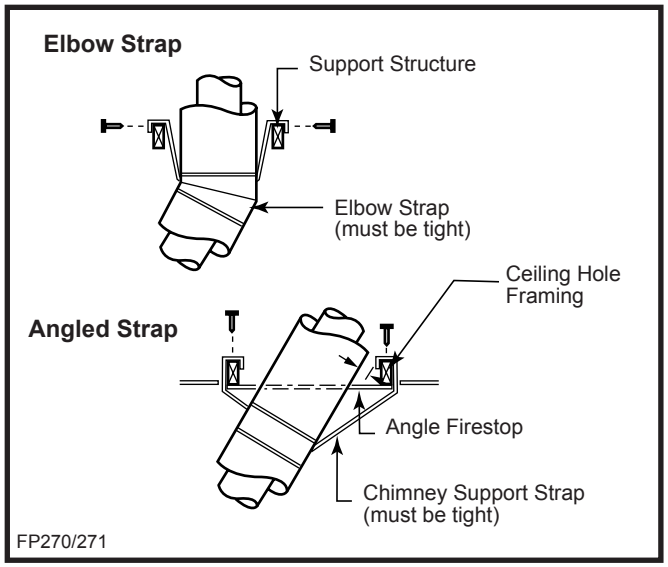

Fig. 17 Attach straps to a structural framing member.

Canadian Requirements for Insulation Shield

In Canada, an attic insulation shield is required to prevent attic insulation from contacting the chimney section. **NOTE:** If the attic insulation shield is used, the firestop is not required in the attic installation. Framing dimensions for the chimney hole should measure 14½" x 14½" (368 x 368 mm). An attic shield MUST be installed on top of attic joists (above the floor level). (Fig. 19)

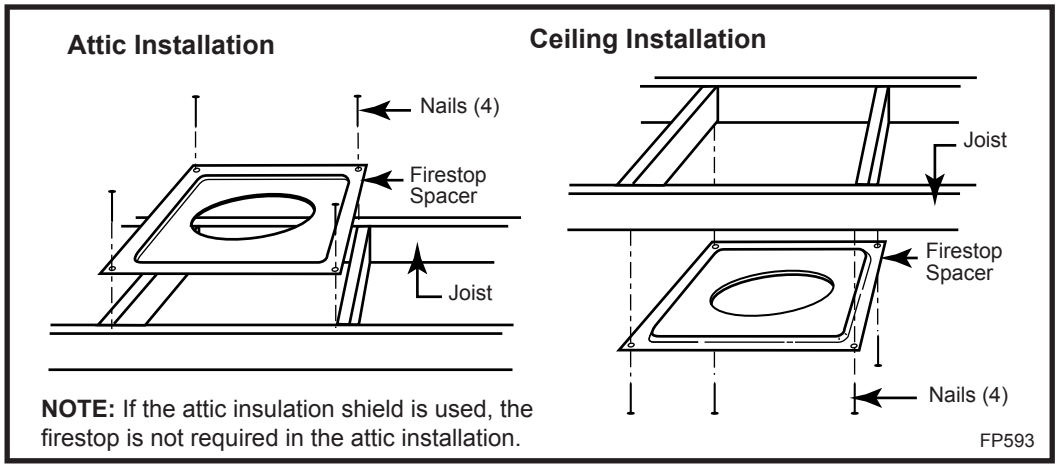

Fig. 18 Installing firestop spacer.

NOTE: In the U.S., it is a good idea, although not always required, to install an attic insulation shield where blown-in insulation is planned to be used in the attic.

Install the attic insulation shield with the flanges on its base extending down into the framing hole. Nail each corner of attic insulation shield to the framing members of the ceiling hole using 8d nails. Attic shields are not required at the roof.

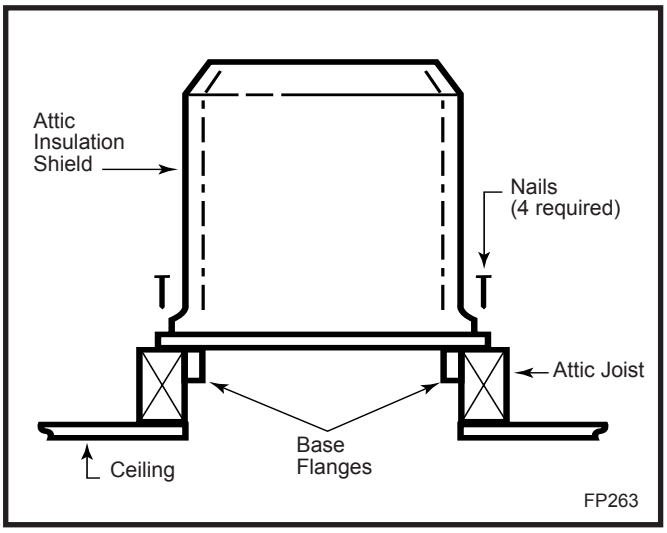

Fig. 19 Attic shield installlation (Canadian requirement).

Continue Installing Pipe to Complete Run

Continue attaching pipe sections to complete system to next level always being careful that the pipe is firmly snapped locked in place before proceeding to next pipe section.

Chimney Supports

If chimney supports are required, they are installed the same as elbows. Nail chimney support straps to adjacent structural framing, as shown on, Page 8, Fig. 9. Bend straps as necessary and make sure they are secure so they will support the weight of the chimney. A chimney support is 2½" (64 mm) long when installed. Consider this dimension when determining how many straight chimney sections are needed.

NOTE: Chimney supports are generally used in long runs in a chase installation.

Additional Ceilings

If you encounter additional ceilings, repeat same steps required for first ceiling installation. Refer to firestop illustration on Page 12, Figure 18.

Penetrating the Roof

Run pipe to roofline. Since the chimney system must be vented to the out-of-doors, you **must** use an approved termination.

If a chase is used, refer to the installation manual provided with the termination cap.

Locate Chimney Centerpoint On Roof

Use same procedure detailed in locating centerpoint of the flue system.

Drive a nail up through roof at the center point. This will determine center point on outside of the roof.

Cut and Frame Roof Hole

Size of roof hole varies with the type of chimney termination installed. Refer to installation instructions provided with the chimney termination to find correct size of roof hole.

There must be a 1½ (38 mm) air space between outermost portion of chimney sections and any adjacent combustible surfaces. (Combustible surfaces include burnable materials such as: ceiling members, joists, flooring, combustible insulation and roof structures.)

WARNING: DO NOT PACK REQUIRED AIR SPACES WITH INSULATION OR OTHER MATERIALS.

Mark an outline of the roof hole around the center of the point nail. **NOTE:** Hole dimensions given in the chimney top installation instructions are **horizontal** dimensions; therefore, the hole size must be marked on the roof accordingly.

Cover the opening of the installed chimney so debris cannot get into the system.

Cut and frame the hole. It is good practice to use framing lumber that is the same size as the rafters. Install the frame securely because the chimney top and flashing anchored to the frame must be able to withstand heavy winds.

Install Remainder of Chimney Sections

Since you have already preplanned the height of your termination according to the *Ten Foot Rule*, continue to install pipe to the predetermined height.

Check the chimney top installation instructions for details on how high above the roof top the chimney sections (all pipes) should extend.

Installing Top Housing or Termination

Follow the installation instructions provided with the chimney termination you have selected.

Installing Chimney In a Chase

Refer to Page 5, Figure 5 for an illustration of a typical chase installation.

CAUTION: Treatment of firestop spacers and construction of chase may vary with type of building. These instructions are not a substitute for local building codes. You **must** check your local building codes to determine specific requirements for your city or state. **NOTE:** Other building materials may be required in addition to Firestop Spacers.

Finishing

CAUTION: All joints between the finished wall and the fireplace surround (top/sides) must be sealed with noncombustible material to prevent cold air leakage into the room. Only noncombustible material may be applied to the facing of the fireplace surround. (Black painted area) (Fig. 20)

Finish Wall

Finish the wall with material of your choice. **Do not install a combustible mantel shelf less than 12" (305 mm) from the top of the fireplace opening for radiant models and 12" (305 mm) from top of grille opening for circulating models. Do not install a mantel face plate less than 6" (159 mm) from top of fireplace opening for radiant models and 6" (159 mm) from top of grille opening for circulating models. (Fig. 22)** If a combustible material is used below a flat mantel shelf, consult your local building codes for minimum clearance from top of fireplace opening to bottom of mantel shelf.

All joints (top, bottom and sides) where wall or decorative facing material meets fireplace surround must be completely sealed with a noncombustible material. (Figs. 21 and 22)

NOTE: No side wall protection is required for fireplaces installed at 45° to two (2) side walls (corner installation).

Often a decorative surround or vertical portion of the mantel is desired. If this is constructed of any combustible material it must be within the safe zone indicated in Figure 23.

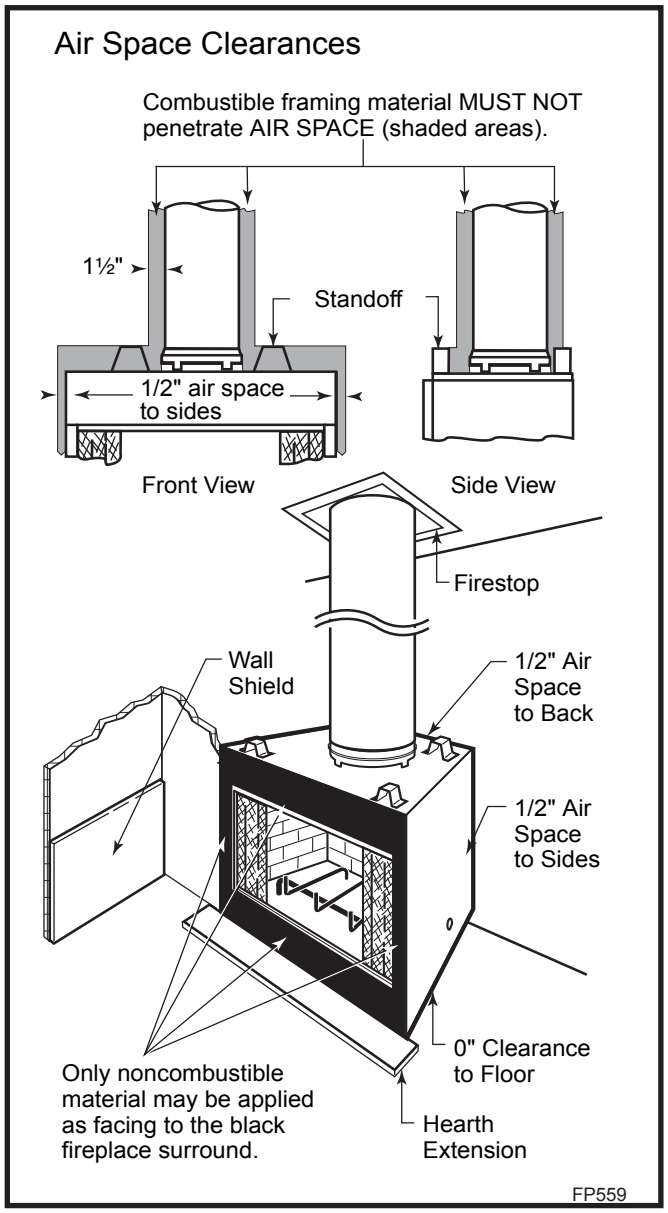

Fig. 20 Minimum clearances to combustibles.

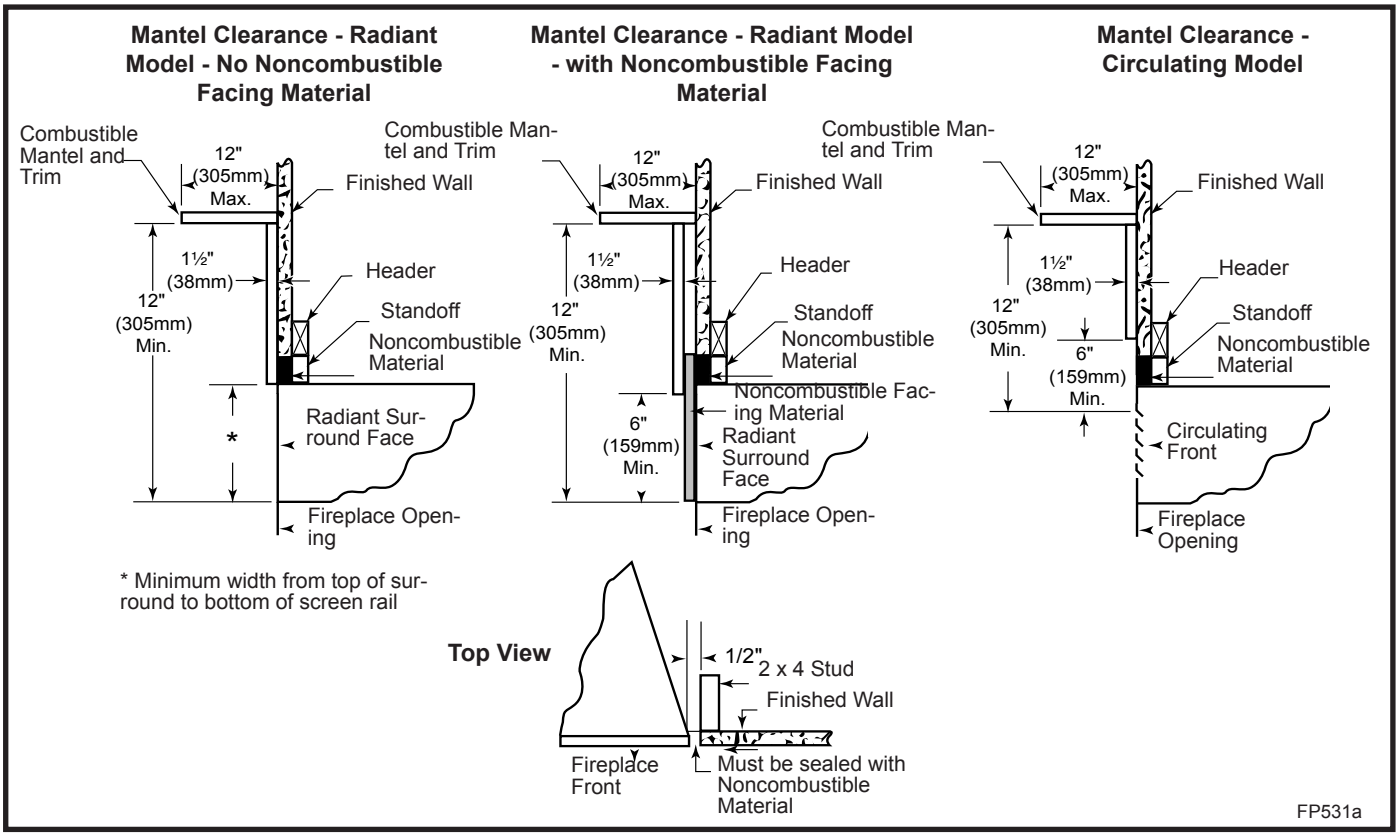

Fig. 21 Mantel clearances.

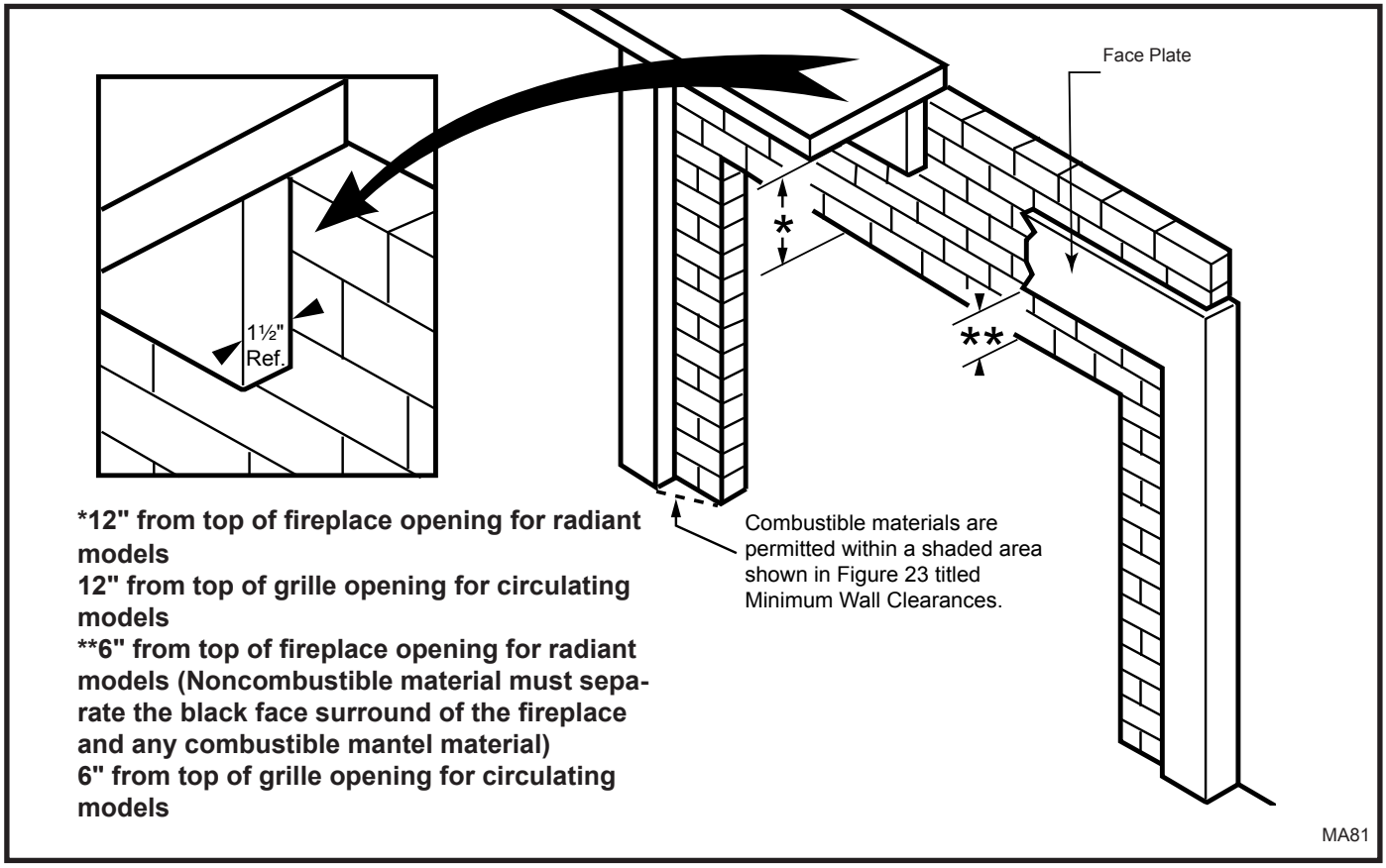

Fig. 22 Combustible mantle clearances.

Side Wall Protection

Adjacent combustible side walls that are within the minimum dimensions shown in Figure 23 of fireplace opening must be protected with MHSC Wall Shield Model SP40 or a specifically built wall shield described below.

The special wall shield design described in Figure 20 is an alternate method of adding protection to side walls and can be used in place of the SP40 with the same wall clearances specified for the SP40. Rt must =1.85 minimum.

Examples of wall shield insulation:

1. Manville - CERAFORM 126, K=.27, 1/2 inches thick
2. MHSC - EH2416, K = .458, 1 inch thick required.

Hearth Installation

A hearth extension is required to protect a combustible floor in front of the fireplace. Refer to Figure 23 for minimum dimensions and mounting detail.

NOTE: Hearth Extension must not cover the air inlet opening of a fireplace.

The hearth extension described in Figure 23 must be a durable noncombustible material with a minimum (total) Rt value of 1.09; refer to Figure 24 for examples. The overall height (above a combustible floor), depth and width must be as indicated, with the extension centered to the fireplace opening.

The top of insulation must be covered with a noncombustible decorative covering **or** a piece of .018" minimum sheet metal, to protect hearth extension material. (Fig. 23)

Secure the hearth extension to the floor to prevent shifting, using trim molding or other similar means at three (3) outer edges. Seal crack between the fireplace hearth and hearth extension with a noncombustible material. (Figs. 23 and 25)

Minimum Wall Clearances

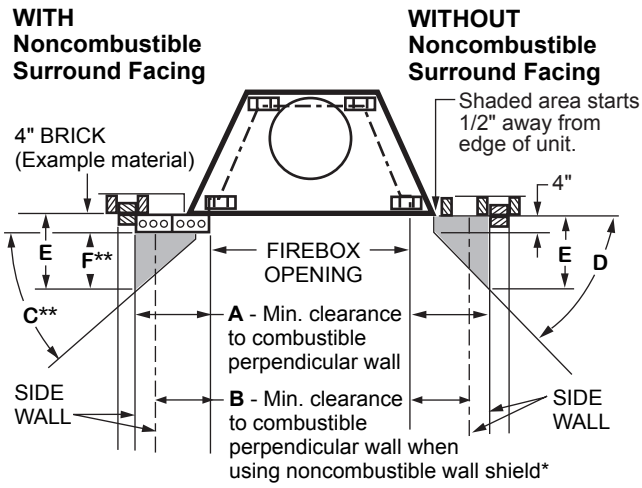

Combustible material permitted within shaded area.

* Noncombustible wall shield requires 1" MHSC EH2416 insulation (minimum R Value = 1.85) between decorative noncombustible rigid covering and combustible wall. Minimum height and width is 40" x 40".

** Dimension/degree of angle will vary depending on thickness of noncombustible surround facing.

Minimum Hearth Extension Dimensions

(for On-Site Construction)

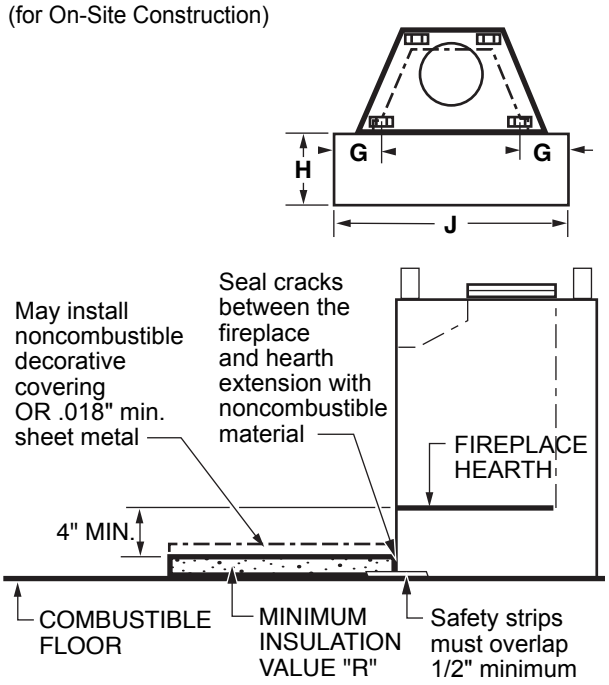

	A	B	C	D	E	F	G	H	J
SR/SC36A	16" 406 mm	12" 305 mm	48°	41°	18" 457 mm	14" 356 mm	7¾" 197 mm	16" 406 mm	48" 1219 mm
SR/SC42A	20" 508 mm	12" 305 mm	42°	35°	18" 457 mm	14" 356 mm	11½" 292 mm	20" 508 mm	61½" 1562 mm

FP594

Fig. 23 Combustible side wall protection and hearth extension dimensions.

COMMON MATERIALS AND FACTORS

MATERIAL	K*	R	MINIMUM THICKNESS
EH2416 *(MHSC)*	0.458	1.09	**0.50 in.****
Common Brick	5.0	0.10	5.46 in.**

R Value is for 1/2 inch.
* Units of K = BTU/SQ FT/HR/˚F/IN
** Thickness of Listed Material

FP533ADD

Fig. 24 Hearth extension material factors.

WARNING: HEARTH EXTENSION MUST BE INSTALLED IN ACCORDANCE WITH FIGURE 23 AND MUST NOT COVER THE BOTTOM FRONT OPENING OF THE CIRCULATING MODEL.

Alternate noncombustible materials may be used providing the (total) thermal resistance (Rt value) of the alternate material employed is greater than or equal to R = 1.09. Thermal resistance (R) or thermal conductivity (K), may be obtained from manufacturer of the material. Factors are related by the formula K = 1/R.

T = given thickness
R = thermal resistance for a given thickness (T)
K = thermal conductivity

Noncombustible material with a lower R value may be used, provided thickness of material is sufficiently greater to maintain an equivalent (total) thermal resistance (Rt).

Example of Determining Hearth Extension Equivalents

To determine the thickness required for any **new** material:

$$\text{NEW required thickness} = \frac{\text{K of new material (per inch)}}{\text{K of listed material (per inch)}} \times \text{thickness of listed material}$$

Example for Common Brick

T (new) = 5.0/0.458 x 0.50 in. = **5.46 in.** (new required thickness).

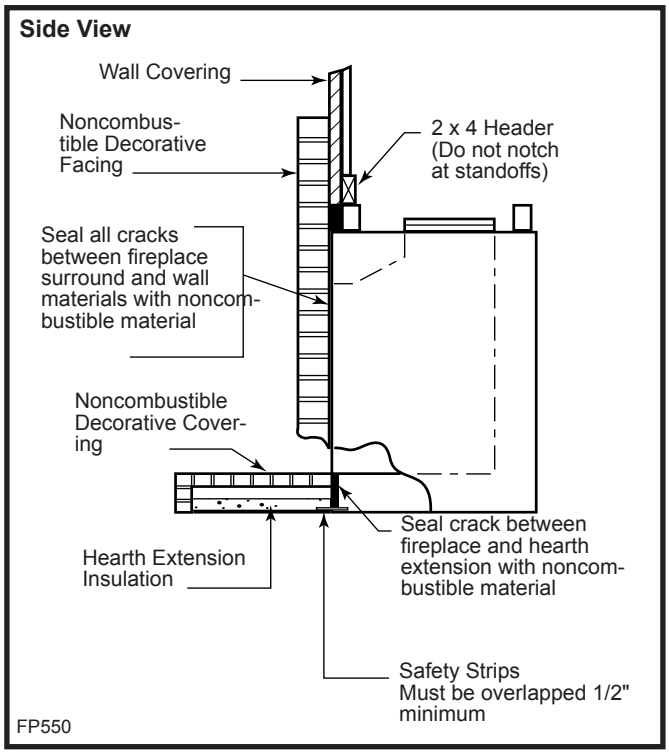

Fig. 25 Sealing gaps.

Installing Line for Gas Logs

MHSC fireplaces are designed to accept a 1/2" (13 mm) gas line for installation of an approved gas appliance. (MHSC manufactures a wide variety of gas logs for use in MHSC fireplaces.)

Be sure to have the appliance installed in accordance with building codes.

Gas connection may enter from either left or right side of the fireplace.

Locate appropriate gas line in the outer casing of fireplace and remove insulation from gas line tube. (Fig. 26)

From inside the fireplace, locate the knockout on the firebrick -- be sure you are on the appropriate or "gas line" side of the fireplace. Using a flat bladed screwdriver or small chisel and hammer, carefully tap around the knockout until it loosens and falls out.

Install 1/2" (13 mm) certified gas pipe through opening. After gas pipe installation is complete, use insulation that was removed from gas line tube to repack space around the pipe. Material should be inserted from outside of the fireplace and packed tightly to totally seal between the pipe and tube.

NOTE: Gas pipe should not come in contact with any wood structures until it has reached a point at least one (1) inch away from fireplace side.

NOTE: When installing an ANSI Z21.11.2 ventless appliance the finishing material used for the mantel must be rated at 250°F or greater.

BTU input of a gas appliance installed in fireplace should be rated less than 100,000 BTU/Hr.

Gas pipe installation is intended for connection to a decorative gas appliance only when (1.) incorporating an automatic shutoff device and (2.) complying with the Standard for Decorative Gas Appliances for Installation in Vented Fireplaces (ANSI Z21.60) **or** CSA draft requirements for Gas-Fired Log Lighters for Woodburning Fireplaces (Draft No. 4, August 1993).

Decorative gas appliance should be installed in accordance with the National Fuel Gas Code, ANSI Z223.1/ NFPA 54 (latest edition).

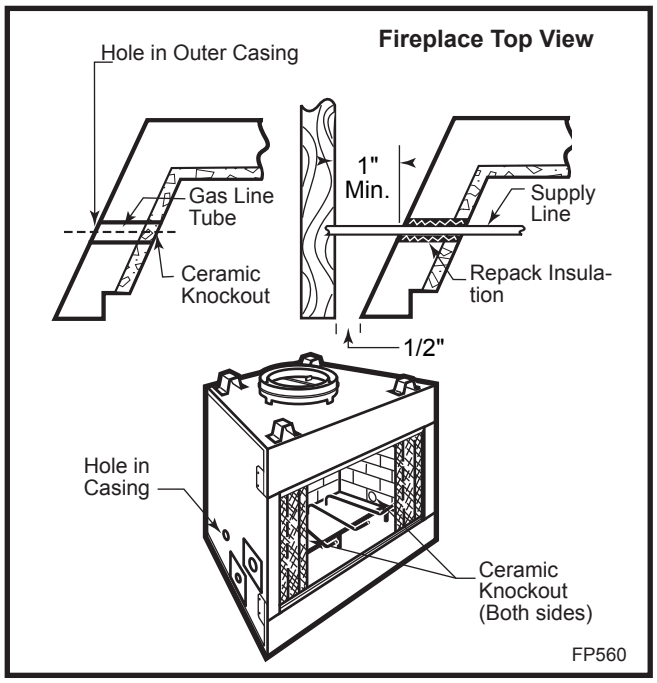

Fig. 26 Gas line access.

CAUTION: WHEN USING DECORATIVE GAS APPLIANCE, FLUE DAMPER MUST BE SET IN FULLY OPEN POSITION. IF YOU HAVE GLASS DOORS ON THE FIREPLACE, THEY MUST ALSO BE FULLY OPENED.

WARNING: DO NOT OPERATE AN UNVENTED GAS LOG SET IN THIS FIREPLACE WITH THE CHIMNEY REMOVED.

WARNING: WHEN INSTALLING AN UNVENTED GAS LOG SET, THE MHSC MODEL CABL OR CABR 4" ADJUSTABLE HOOD MUST BE USED.

If installing an unvented gas log set, refer to statement below:

> Only unvented gas logsets which have been found to comply with the Standard for Unvented Room Heaters, ANSI Z21.11.2, are to be installed in this fireplace.

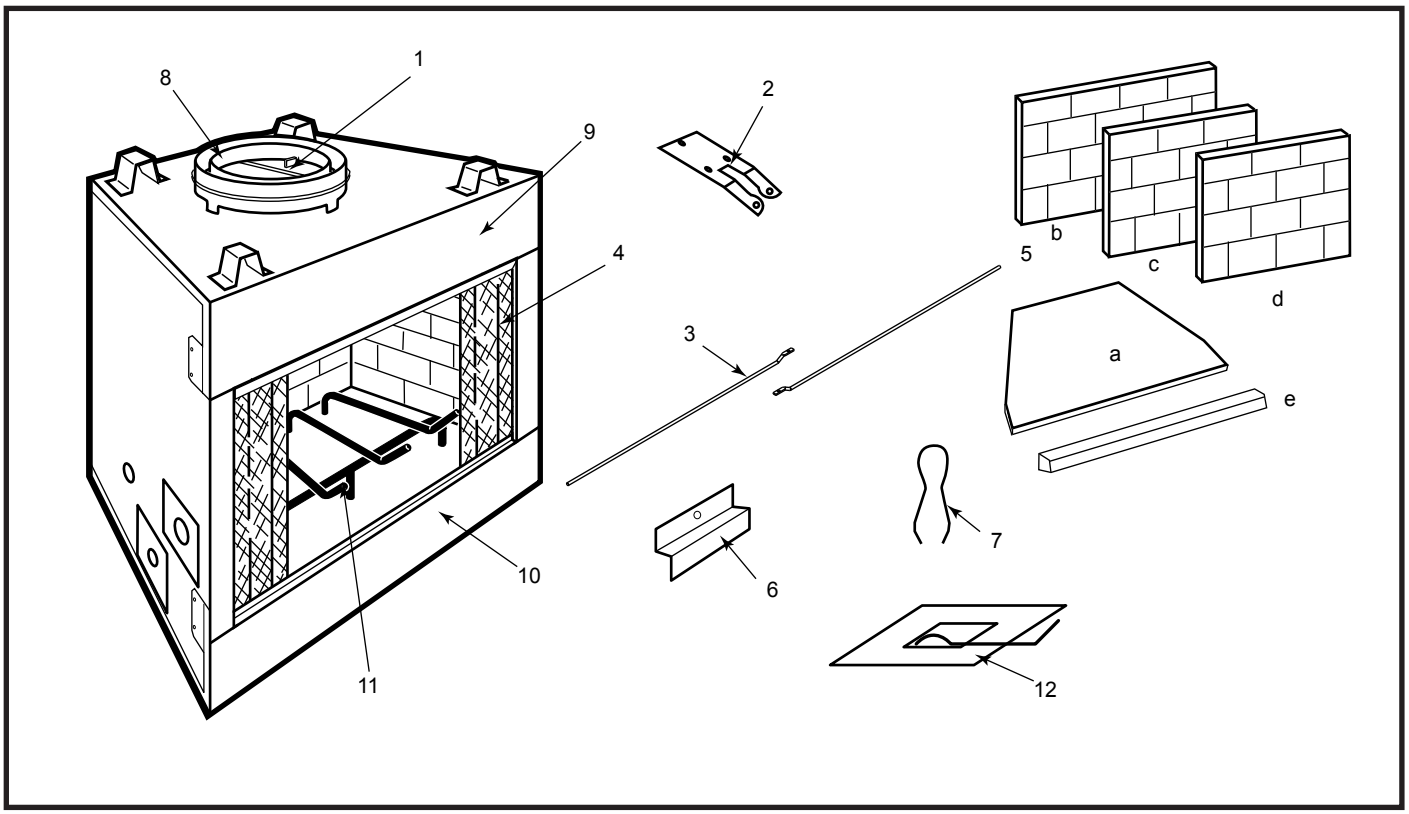

MHSC reserves the right to make changes in design, materials, specifications, prices and discontinue colors and products at any time, without notice.

SR36A/42A, SC36A/42A SERIES

Ref.	Description	SR/SC36A	SR/SC42A
1.	Damper Weld Assembly	RP199	RP199
2.	Damper Bracket	3030176	3030176
3.	Screen Rod (two per fireplace)	26D0138	61D0500
4.	Screen Assembly (two per fireplace)	61D0001	61D0003S
5a.	Firebrick - Hearth	20005621	20005421
5b.	Firebrick - Rear	20005627	20005462
5c.	Firebrick - Right Side	20005626	20005461
5d.	Firebrick - Left Side	20005625	20005460
5e.	Firebrick - Ashlip	20005619	20005418
6.	Top Brick Retainers (three per fireplace)	3030172	3030172
7.	Cable Clips (two per fireplace)	7512135	7512135
8.	Outer Collar Assembly (SK8 Chimney)	3030143	3030143
9.	Top Louvre Assembly (SC Only)	87D0007	87D0020
10.	Bottom Louvre Assembly (SC Only)	87D0004	87D0017
11.	Basket Grate	3041130	3041130
12.	O.S.A. Assy.	20003076	20003076

The following accessories for this appliance are available from your local MHSC Fireplaces distributor. Should you need additional information beyond what your distributor can furnish, contact: MHSC, 149 Cleveland Drive, Paris, KY 40361, Attn: Technical Services.

CAUTION: This fireplace and chimney assembly is a highly engineered system, and, as such, must be operated only with MHSC approved components. If you use an unapproved component to make any modifications, you may create a possible fire hazard and will void the MHSC warranty. In addition, such action may void the coverage provided by the owner's insurance.

Accessory	Description		Model Number
Glass Door — Standard	Bi-Fold door set	Brushed Brass finish	36GDKBBSR (SR/SC36A) 42GDKBBSR (SR/SC42A)
		Black finish	36GDKBKSR (SR/SC36A) 42GDKBKSR (SR/SC42A)
		Polished Brass finish	36GDKDPSR (SR/SC36A) 42GDKDPSR (SR/SC42A)
		Pewter finish	36GDKSSR (SR/SC36A) 42GDKSSR (SR/SC42A)
Fan Kit	Provides forced air flow		FK12
Variable Speed Control	Provides speed adjustment of fans		SCVS
Outside Air Termination	Completes connection from air kit to out-of-doors		AK-MST
Chimney Adapter	Converts fireplace to 3-wall system		TWABR
Hearth Extension Insulation	Provides hearth extension floor protection		EH2416
Grate SR/SC36A/42A	Holds firewood in firebox		RSBG36
Hearth Patch Compound	Patch cracks in hearth		HPC-1

Contact your MHSC Fireplaces distributor or dealer for finishing Marble and Mantels, available in a wide selection of styles.

Chimney Components

U.S.

Component	Description	Model Number
Round Top Termination	Top used to terminate chimney at roof. (Flashing not included.)	RLTSK8
Round Top Termination - Extended	Top used to terminate chimney at chase. (Flashing not included.)	RLTSK8L
Flashing	Metal finishing required around Contemporary Termination to prevent rain leakage.	8-6-12 with 8" flue: 0-6/12 pitch 8-12-12 with 8" flue: 6/12-12/12 pitch
Square Termination Housing	Top housing of simulated brick pattern available in red, tan or white. Appropriate adapter required. Flashing included.	S20B (R, T, W) Must also include: PLTSK8 or SLTSK8
Adapter Kit	Unites Square Termination with chimney pipe (required).	CF8CA
Housing Extensions	Extends Square Termination on steep pitched roofs.	202036
Square Chase Termination	Housing used to terminate chimney through a chase top. Appropriate adapter required. (Flashing not included.)	CT100
Adapter Kit	Unites Square Chase Termination with chimney pipe (required).	CTSK
Chase Top Housing	Low profile pyramid-style chimney cap used to terminate chimney through a chase. Includes adapter. (Flashing not included.)	PLTSK8
Chase Top Housing	Square chimney cap used to terminate chimney through a chase. Terra Cotta Masonry. Includes adapter. (Flashing not included.)	SLTSK8
SK8 Chimney Sections	Pipe used to build 8" (SK8) flue systems.	SK81 (1' Long) SK818 (1½' Long) SK83 (3' Long) SK84 (4' Long)
SK8 Chimney Elbows	Elbow used to create an offset in an 8" chimney system. Only 30˚ elbows available. Packaged 2 per carton (offset and return).	SK830-2
Firestop	Required at each floor level of chimney installation. (Plus attic on multi-story installation.)	SKFS2A — (8" straight flue) SKFS6A — (8" 30˚ inclined flue)
Chimney Support	Used to support chimney for each of: 30' vertical height and 6' of angled chimney run.	SKCS8

(Chimney Components con't.)

Canada

Component	Description	Model Number
Chimney Collar Enclosure	Installs on the "over the chimney collar" of the fireplace; provides outside air to assist in cooling the chimney system.	CCE-SK
Attic Insulation Shield	Used to prevent insulation from coming in contact with the chimney system.	AIS-SK
SK8 Chimney Sections	Used to build chimney systems exposed above roof.	SK818CAN (1½' Long) SK84CAN (4' Long)
45˚ Chimney Elbows	Provides 45˚ offset and return. For Canadian installations only. For use with SK8 chimney only. (Maximum use of 2, or 1 pair.)	SK845/2

LIMITED WARRANTY

Factory-Build Fireplace and Components (Except Blowers)

What is Covered and For How Long

Five-Year Coverage: For five years from the date this fireplace and components are first purchased for use, MHSC will, at its option, repair or replace any defective part of this fireplace or components, or refund to you a sum not to exceed the factory retail price in effect at the time of purchase.

Ten-Year Coverage: From the sixth through the tenth year following the date this fireplace or accessory is first purchased for use, MHSC will make available to you, at our factory, a free replacement for any defective part in this fireplace or accessory.

Twenty-Five-Year Availability of Replacement Parts: From the eleventh through the twenty-fifth year following the date this fireplace or accessory is first purchased for use, MHSC will make available at our factory replacement parts for this fireplace or accessory, which you may purchase for the list price current at the time your purchase order is received.

What is Not Covered

- This limited warranty does not cover:
- Transportation or shipping cost.
- The cost of a service call to diagnose trouble.
- Painted surfaces.
- Damage or defect caused by improper installation, accident, misuse, abuse or alteration.
- Poor ventilation of smoke or gases caused by air-conditioning and heating systems, exhaust fans, or pressure differentials produced by wind.
- Broken glass components.
- Cracks in ceramic and castable parts that do not affect safe operation.
- We do not warrant this fireplace to be in compliance with your local building code. Building codes vary greatly throughout the country, and you should determine whether your local building code contains restrictions on the use of this fireplace before you purchase it.
- Blowers or fans, which are warranted separately.
- Heat loss due to the passage of heat or air through or around the fireplace.

Also, under our five year coverage, we do not pay the cost of removal and replacement of any portion of the structure in which the fireplace is situated, made necessary by the repair, removal or re-installation of the fireplace.

And under our twenty-five year warranty of availability of replacement parts, we only promise to maintain a supply of replacement parts at our factory for you to purchase.

Limitations and Exclusions

1. No one has authority to add to or vary this limited warranty, or to create for MHSC any other obligations of liability in connection with this fireplace and accessory.
2. MHSC shall not be liable for incidental, consequential, special or contingent damages you might suffer as a result of its breach of this written warranty or any implied warranty. Some states do not allow the exclusion of limitation of incidental or consequential damages, so the above limitations may not apply to you.
3. This warranty applies only to a fireplace sold and used in the United States.

For information about this warranty, contact:

MHSC
149 Cleveland Drive
Paris, Kentucky 40361

MHSC

149 Cleveland Drive • Paris, Kentucky 40361
www.mhsc.com