PRODUCT SPECIFICATIONS

# WEF26 Allura-Fire Electric Fireplace

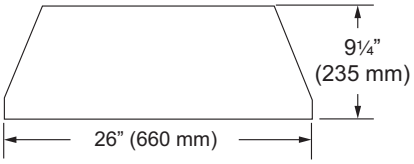


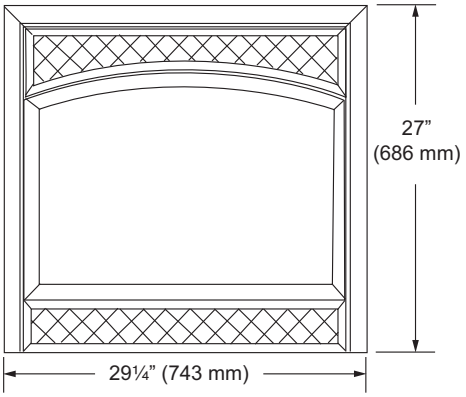


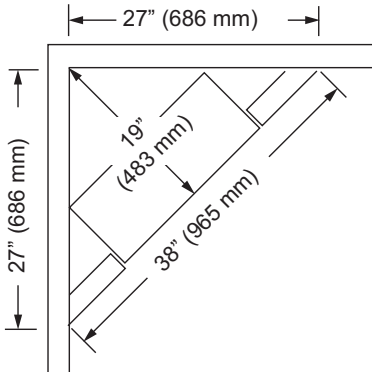


## FRONT DIMENSIONS

29 1/4" W x 27" H

## TECHNICAL INFORMATION

Btu Rating: 120V installed voltage 5,000 BTU/HR
Total Watts: 1,500W
Total Amps: 15
CSA Design Certified

## STANDARD FEATURES

Decorative arched face surround in Classic Black
Built-in thermostat for optimum room comfort
User friendly control panel is concealed for easy access behind the top arched surround filigree
Standard full function remote control regulates on/off function, flame height, fan control, ember bed intensity and overhead lighting control for ultimate convenience
Overhead lighting enhances the ambient flame and glowing ember bed
Sandstone refractory on sides for traditional fireplace apperance
Enhanced log stack, color and texture for true to life fire
Fixed arched glass
Heater functions with the flame on and off

LIMITED LIFETIME WARRANTY

MADE IN U.S.A.

A Brand of Monessen Hearth Systems Co.
149 Cleveland Drive, Paris, Kentucky 40361
**www.majesticproducts.com**

MAJESTIC

To avoid personal injury or property damage, the product described by this brochure must be installed, operated and maintained in strict compliance with the instructions packaged with the product and all applicable building or fire codes. Contact local building or fire officials about restrictions and installation inspection requirements. All photographs and drawings on this brochure are for illustrative purposes only and are not intended for, nor should they be used as a substitute for the instructions packaged with the unit. Appearance and specifications of the product are subject to change without notice. 02/10