This Owner's Manual is provided and hosted by Appliance Factory Parts.

Appliance Factory Parts
Experts in BBQ, Humidifier, & Appliance Parts
1-800-955-7075

# SUBZERO 685-3
# Owner's Manual

Shop genuine replacement parts for SUBZERO 685-3

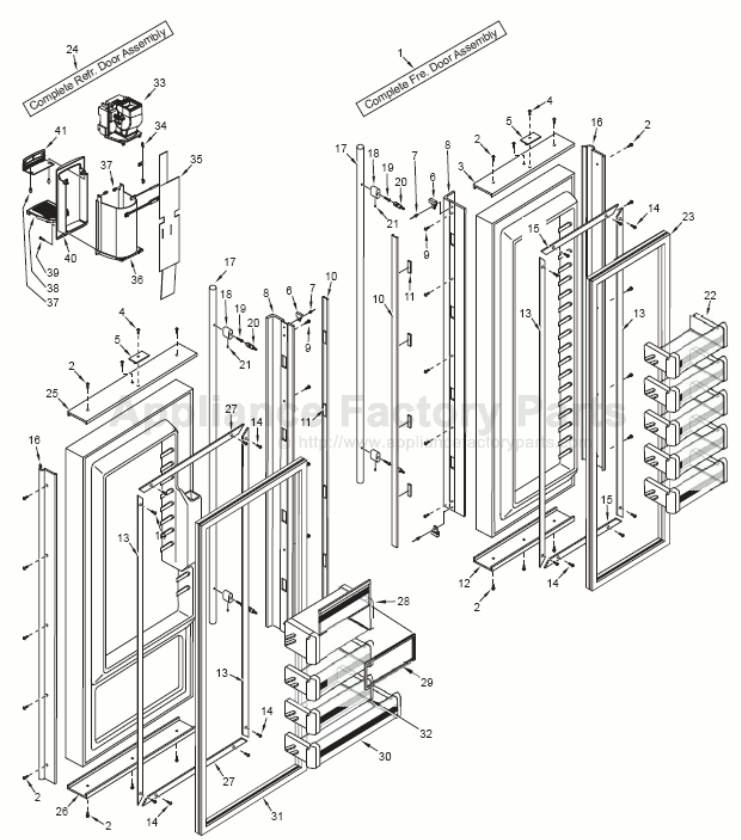


Find Your SUBZERO Refrigerator Parts - Select From 117 Models

-------- Manual continues below --------

## ICEMAKER PARTS LIST

| Ref # | Part # | Description |
|---|---|---|
| 1 | 4200521 | Icemaker Assy Complete- (Models 601F-2, 632-2, 642-2, 661-2) |
| | 4200522 | Icemaker Assy Complete- (Models 611-2, 611G-2, 650-2, 650G-2, 685-2, 695-2) |
| 2 | 75107431 | Ice Ejector |
| 3 | 75142606 | Bearing/Inlet - (Models 601F-2, 632-2, 642-2, 661-2) |
| | 75107414 | Bearing/Inlet - (Models 611-2, 611G-2, 650-2, 650G-2, 685-2, 695-2) |
| 4 | 75107417 | Mold Body Assy. (Includes Mold Heater) |
| 5 | 75107448 | Screw |
| 6 | 75142604 | Ice Level Arm, Short - (Models 601F-2, 632-2, 642-2, 661-2) |
| | 75142605 | Ice Level Arm, Long - (Models 611-2, 611G-2, 650-2, 650G-2, 685-2, 695-2) |
| | 3140330 | Ice Level Arm / Rudder *(Not Shown)* - (Models 611-2, 611G-2, 650-2, 650G-2) |
| | 3140400 | Ice Level Arm / Rudder *(Not Shown)* - (Models 685-2, 695-2) |
| 7 | 75107426 | Bracket, Mounting |
| 8 | 75129507 | Ice Stripper |
| 9 | 75107424 | Harness, Wire |
| 10 | 75107460 | Screw |
| 11 | 75107404 | Drive Motor |
| 12 | 75107446 | Screw |
| 13 | 75140588 | Screw |
| 14 | 75107405 | Thermal Cut-out |
| 15 | 75107442 | Screw |
| 16 | 75107408 | Clamp |
| 17 | 75107438 | Plate, Mounting |
| 18 | 75107452 | Spacer |
| 19 | 75107401 | Switch |
| 20 | 75107451 | Screw |
| 21 | 75056861 | Thermostat |
| 22 | 75107436 | Cam |
| 23 | 75107416 | Support |
| 24 | 75107419 | Gear, Timing |
| 25 | 75107443 | Spring, Fill Adjust |
| 26 | 75140586 | Screw |
| 27 | 75107459 | Screw |
| 28 | 75107453 | Screw |
| 29 | 75140589 | Screw |
| 30 | 75107457 | Plate, Valve Switch |
| 31 | 75107456 | Insulator, Valve Switch |
| 32 | 75107455 | Screw |
| 33 | 75107449 | Screw |
| 34 | 75107430 | Lever Arm |
| 35 | 75140584 | Spring, Shut-off |
| | 480855 | Spring Kit |
| 36 | 75142601 | Cover |
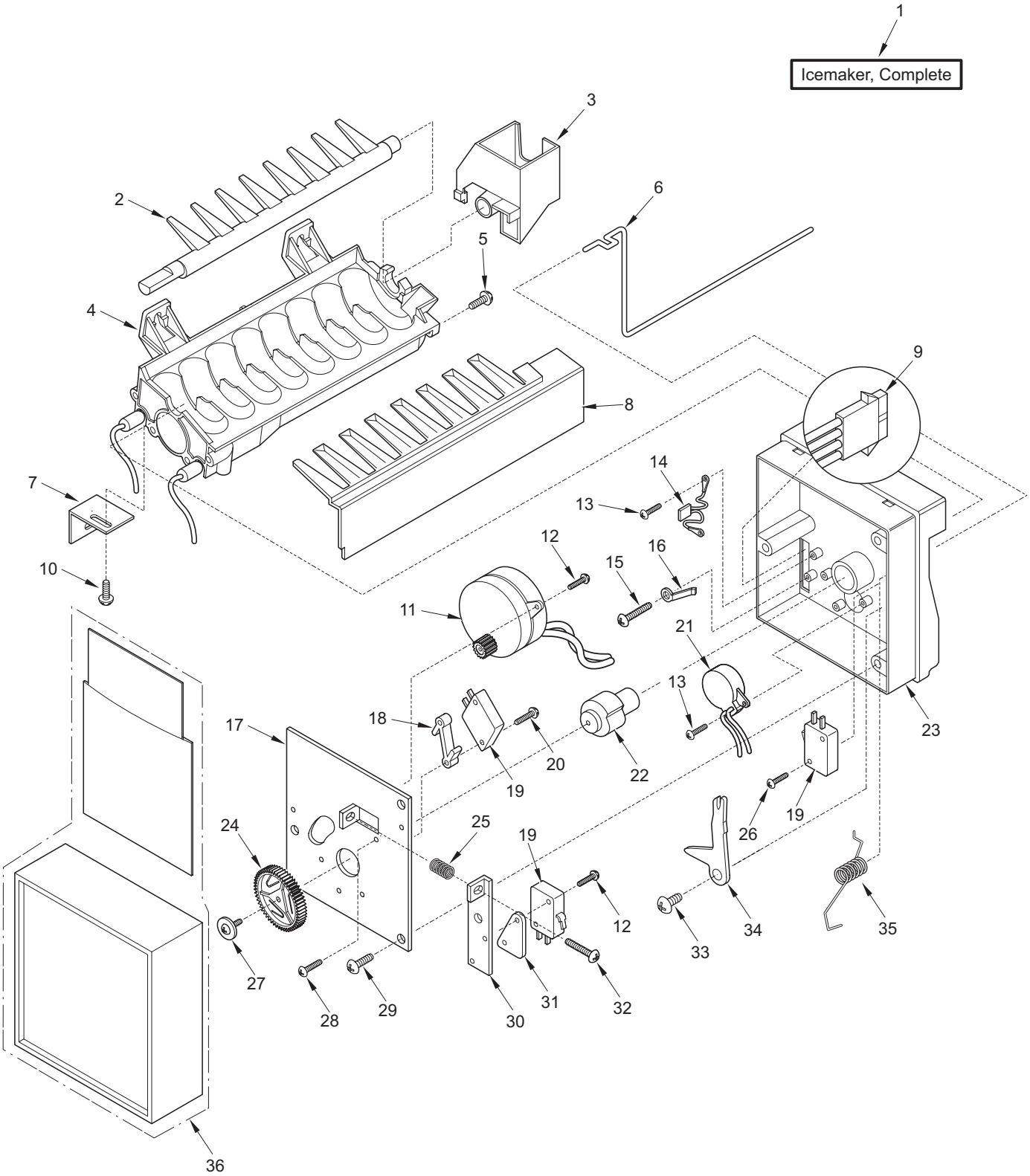
## ICEMAKER PARTS VIEW