MC-V5504

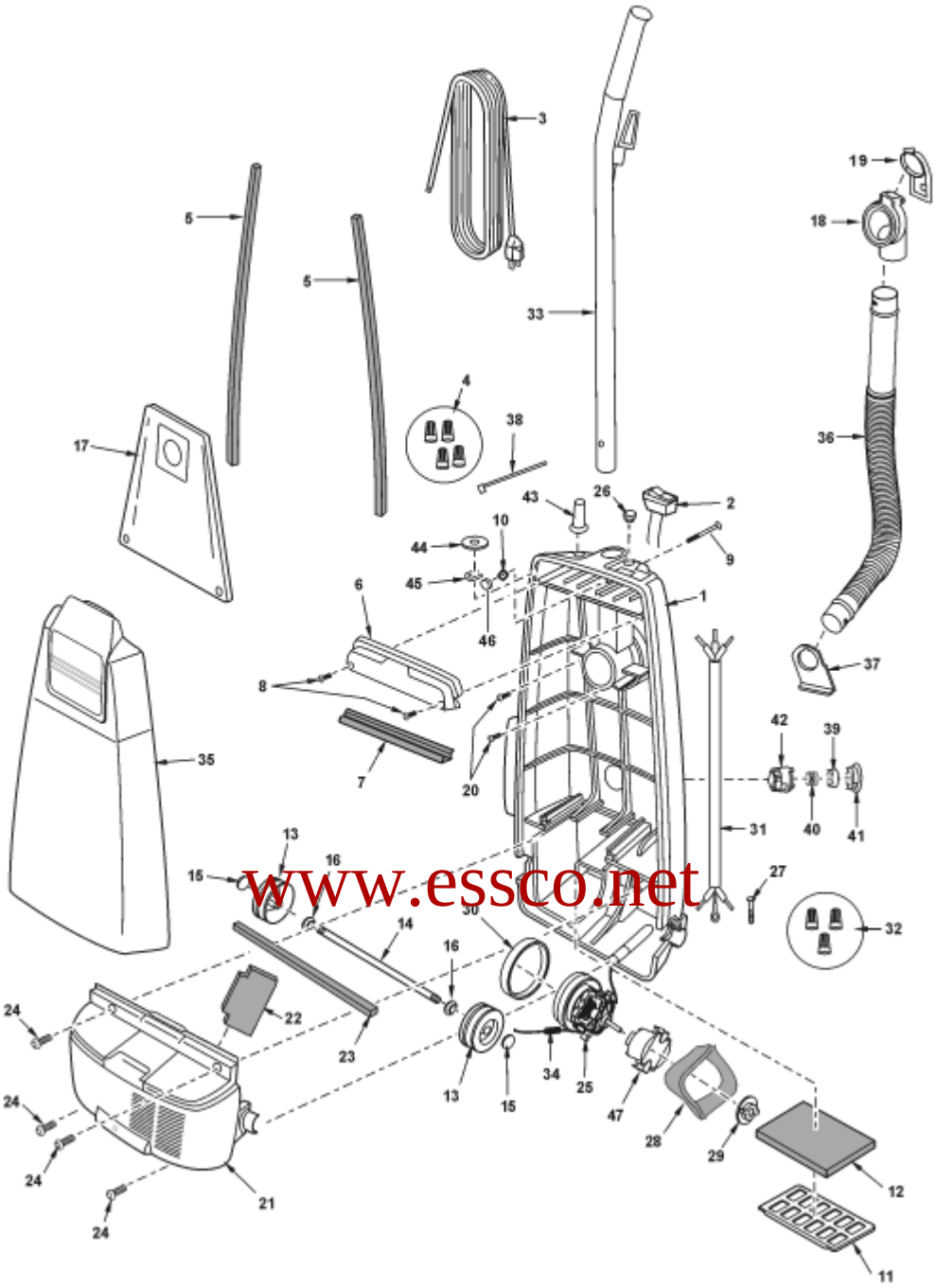

www.essco.net

Ref. No.	Part No.	Part Name & Description	Quantity	Remarks
1	AC88KARFZV07	Dust Compartment	1	Includes items 38,44,45 and 46
2	AC98EARFZ0U	ON/OFF Switch	1	Includes items 38 and 46
3	AC94EAPNZY02	Power Cord	1	Includes items 38,44,45 and 46
4	AMC-1CTCE23	Wire Connector	4	Shipped 10 per package
5	AC66KV01V06	Packing, Dust Container	2	
6	AC03EARFZV06	Switch Cover	1	Includes item 46
7	AC73KV0ZV06	Packing (Switch Cover)	1	

8	AXTN4+16BFY	Screw (Switch Cover)	2	Shipped 10 per package
9	AMC73B-V00	Handle Screw	1	
10	AMP21B-170	Nut (Handle Screw)	1	
11	AMC32K-V00	Filter Supporter	1	
12	AMC37K-V00	Secondary Filter	1	
13	AC01CV0ZVUB	Wheel	2	
14	AC16CUSZ00	Shaft, Roller	1	Shipped 10 per package
15	AC74SUSZ00	Stopper (Wheel)	2	
16	AXWG6E115FY	Washer (Wheel)	2	Shipped 10 per package
17	AC16KJYZ00	Dust Bag (Type U6)	1	
18	AC60HF74VU6	Suction Inlet	1	
19	AMC02H-F70E	Cover (Suction Inlet)	1	
20	AXTN4+16BFY	Screw (Suction Inlet)	2	Shipped 10 per package
21	AC09FAECZV07	Motor Case	1	
22	AMC02L-V00	Packing (Rear Cover)	1	
23	AC19FJPZV06	Packinig (Motor Case)	1	
24	AXTN4+20BFY	Screw (Motor Case)	4	Shipped 10 per package
25	AC92FTEZ0U	Motor, Fan	1	
26	AC38HAPNZ0U	Cover Cap	1	
27	AXYN4+E10FFY	Screw, Ground	1	
28	AC99GAMMZ000	Noise Suppressor	1	
29	AMC03F-V00	Motor Support (Rear)	1	
30	AMC02F-E00	Motor Support Rubber (Front)	1	
31	AC37GTEZ0U	Wire Cord	1	
32	AMC-1CTCE23	Wire Connector	3	Shipped 10 per package
33	AC95BTEZVU7	Handle	1	Include cord storage hook
34	AC99WARGZ00	Lead Wire Assembly	1	
35	AC60KCMYZU03	Dust Cover	1	

www.essco.net

36	AC34PV02V06	Hose	1	
37	AMC24P-2V0	Hose Supporter	4	
38	AMC596-702	Wire Tie	1	Shipped 10 per package
39	AC69KJMZV06	Protector	1	
40	AC70KAECZY00	Protector Spring - Yellow	1	
41	AC18MJMZV06	Protector Spring	1	
42	AC68KJMZV06	Protector Case	1	
43	AC51E4GZU01	Rubber Protector	1	
44	AXWE10J223FE	Washer	1	
45	AC06WAPNZ00	Cord Retainer	1	
46	AC61LAGMZ00	Packing (Insulator)	1	
47	AC93FTEZ0U	Plastic Cover (Motor)	1	

www.essco.net

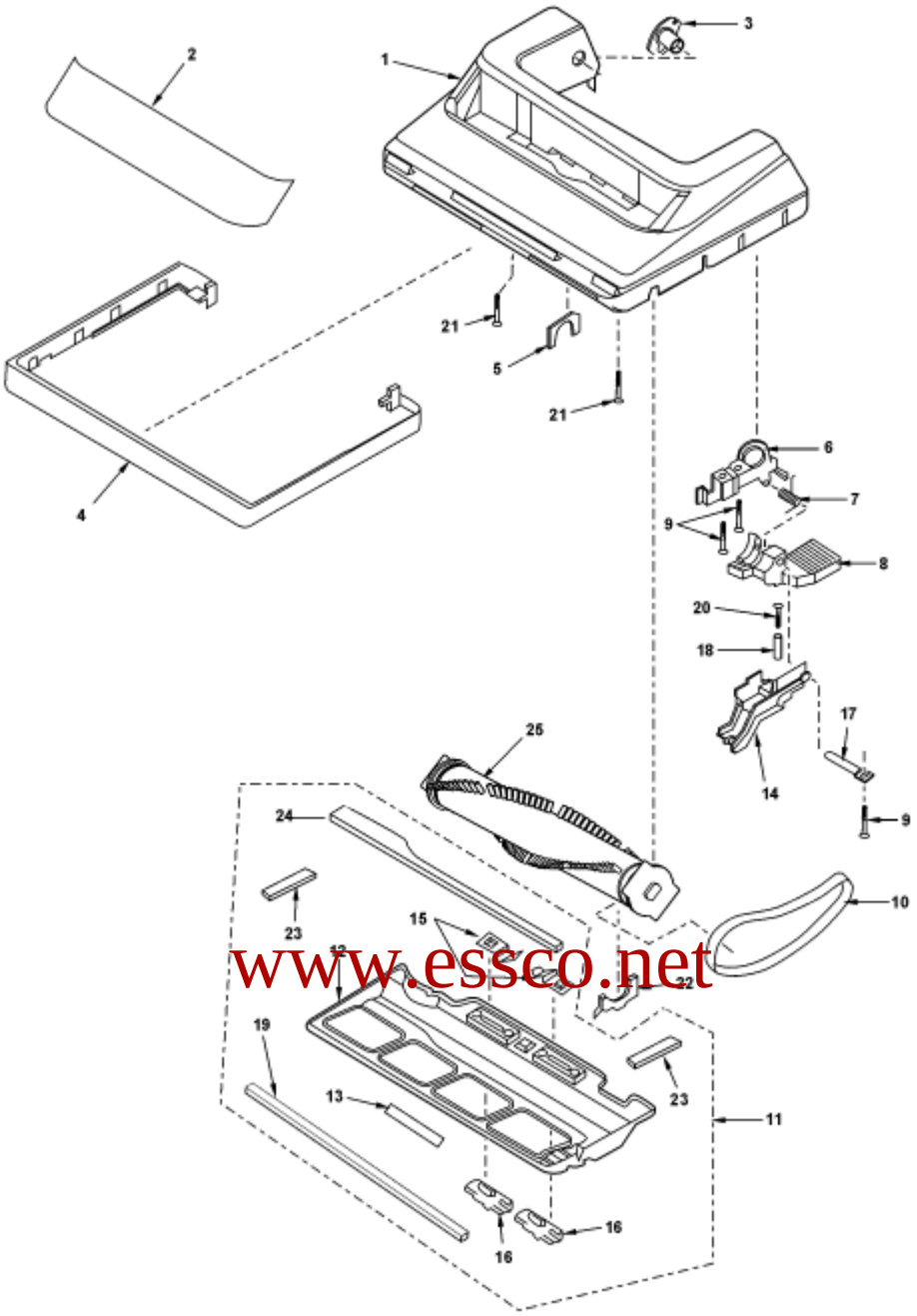

www.essco.net

Ref. No.	Part No.	Part Name & Description	Quantity	Remarks
1	AC01ACMYZU03	Nozzle Housing	1	Includes Item 4
2	AC21H2XZU03	Window	1	
3	AMC25S-V00	Shaft (Plastic)	1	
4	AC10A2VZV07	Furniture Guard	1	
5	AMC81A-V00	Packing (Nozzle)	1	
6	AMC43A-2V0	Frame	1	
7	AMC58A-2V0	Spring (Pedal)	1	Shipped 10 per package
8	AMC47A-2V0U	Pedal	1	

9	AXTN4+16BFY	Screw (Frame)	3	Shipped 10 per package
10	AC28SJPZ00	Belt	1	
11	AC91AARFZ00	Lower Plate Assembly	1	
12	AC27AARFZ00	Lower Plate	1	
13	AC07ZADFZ00	Warning Label	1	
14	AMC11S-2V0W	Belt Cover (Rear)	1	
15	AC70NYUZ00	Stop Latch Spring	2	
16	AMC68N-V30K	Latch	2	
17	AMC51A-2V0	Pedal Shaft	1	
18	AMC74S-Z100G	Spacer	1	
19	AC74AAAEZ00	Packing (Lower Plate Front)	1	
20	AXTN4+28BFY	Screw (Spacer)	1	Shipped 10 per package
21	AMC68A-V30	Screw (Nozzle)	2	Shipped 10 per package
22	AMC82A-2V0	Agitator Holder	1	
23	AMC39A-2V0	Packing (Lower Plate Sides)	2	
24	AMC74A-2V0	Packing (Lower Plate Back)	1	
25	AC84RBZDZ000	Agitator Unit	1	

www.essco.net