This Owner's Manual is provided and hosted by Appliance Factory Parts.

Appliance Factory Parts
Experts in BBQ, Humidifier, & Appliance Parts
1-800-955-7075

BOSCH BSG81296 Owner's Manual

Shop genuine replacement parts for BOSCH BSG81296

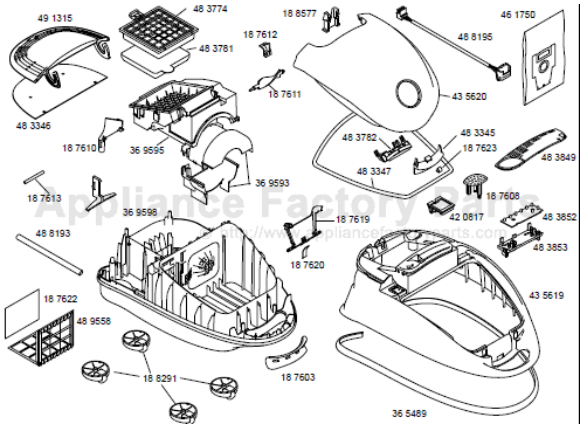

Find Your BOSCH Vacuum Cleaner Parts - Select From 27 Models

-------- Manual continues below --------

BOSCH

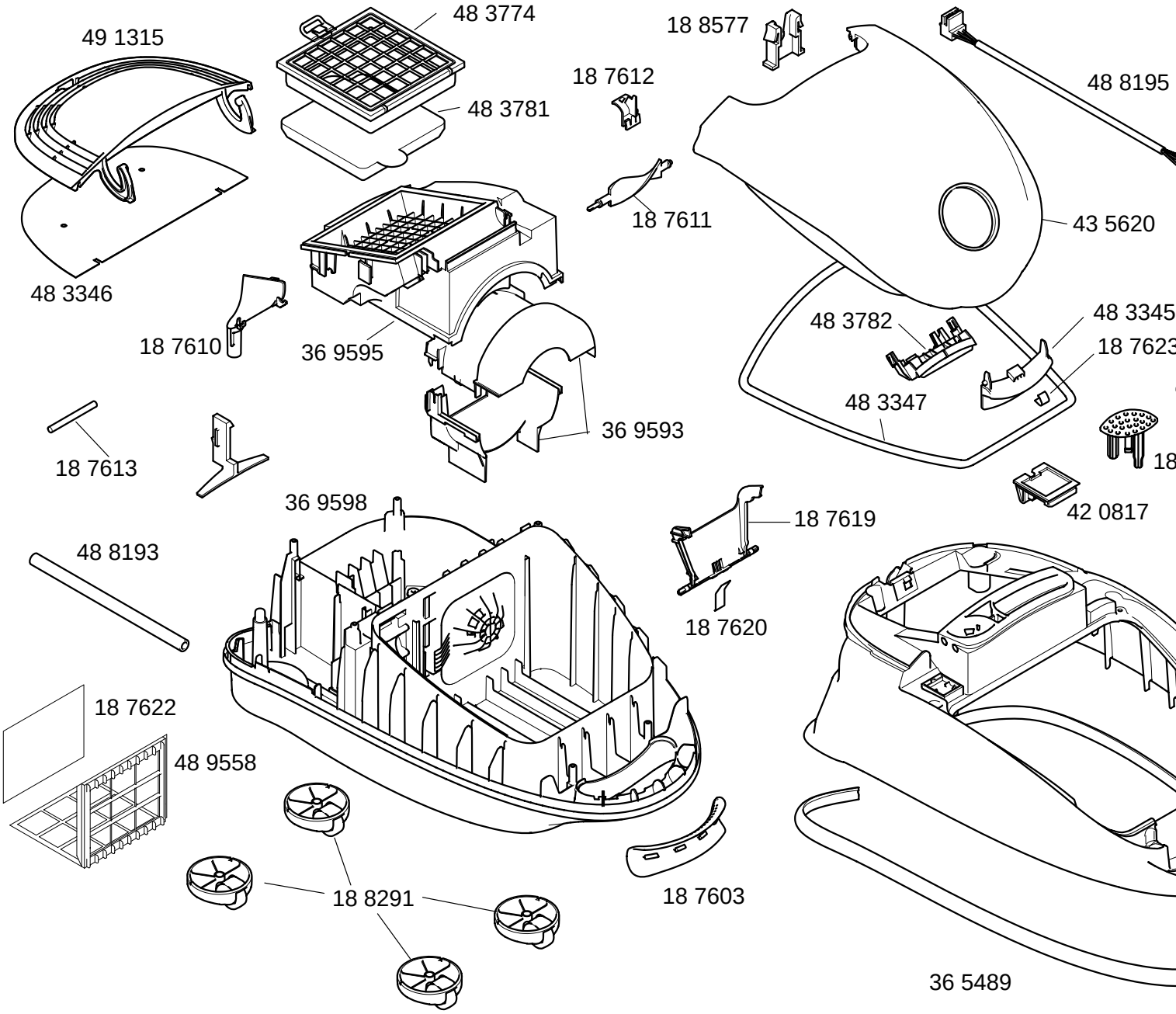

e171470-5/1

BOSCH

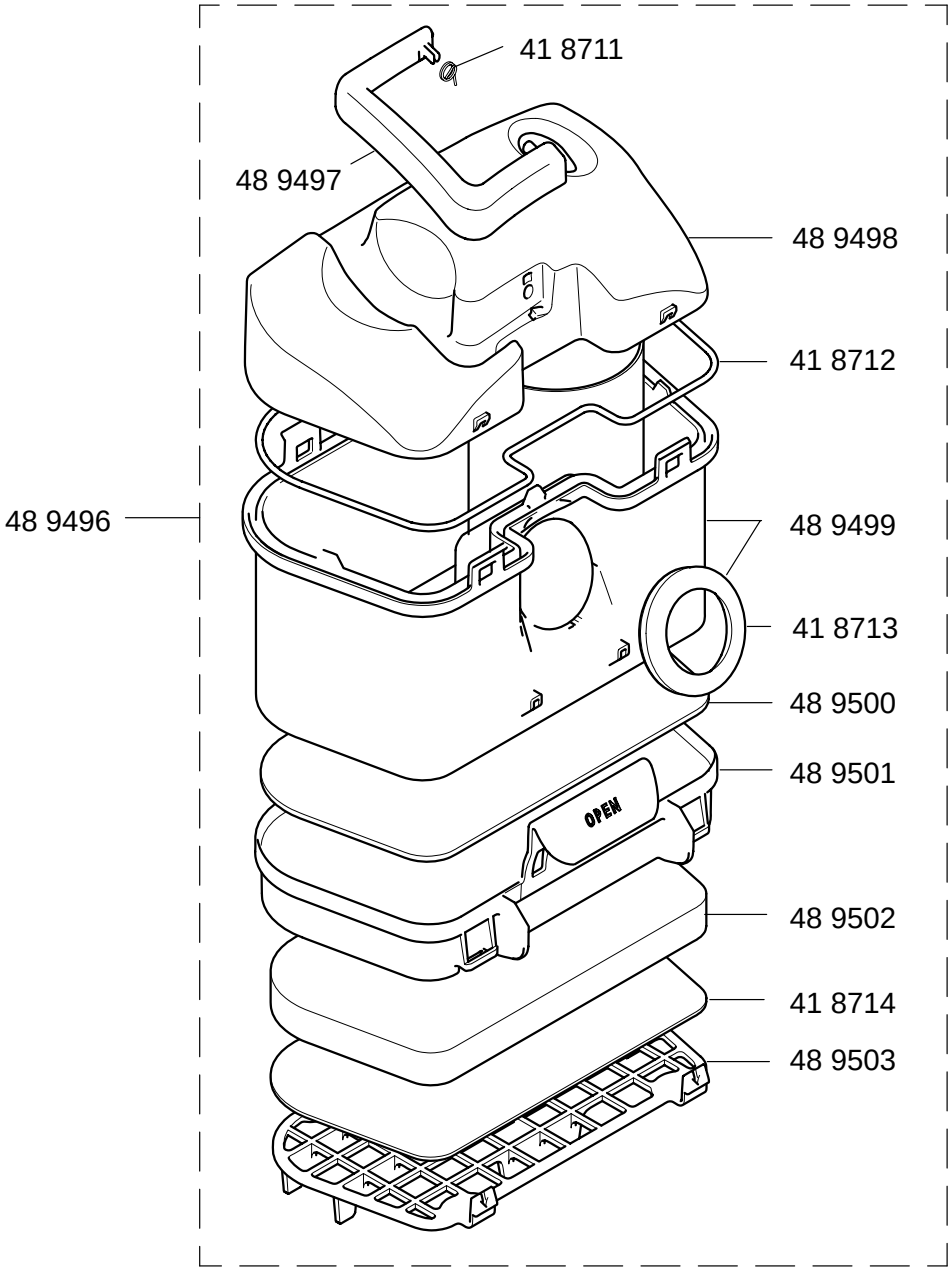

e171470-5/2

BOSCH

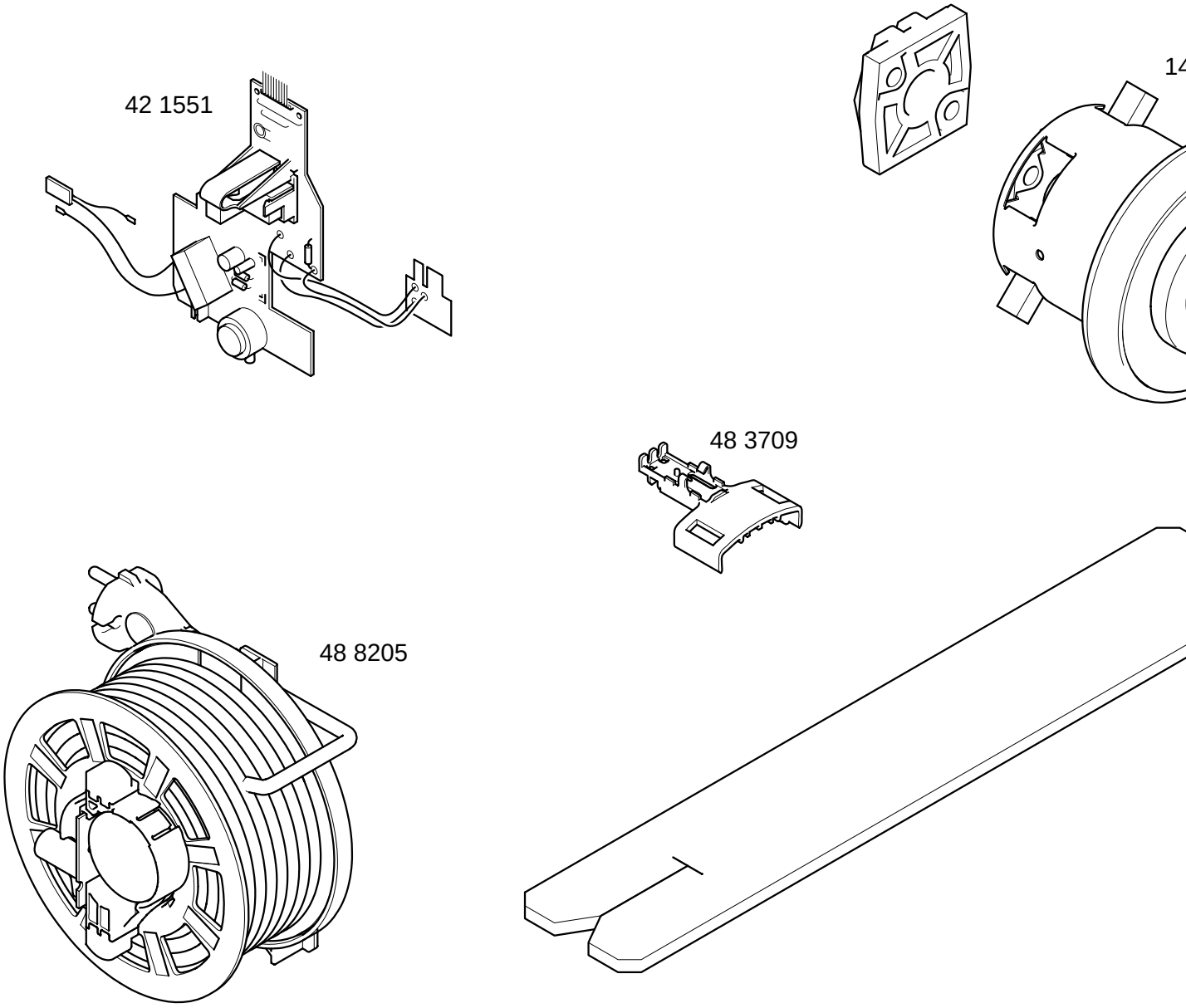

e171470-5/3

BOSCH

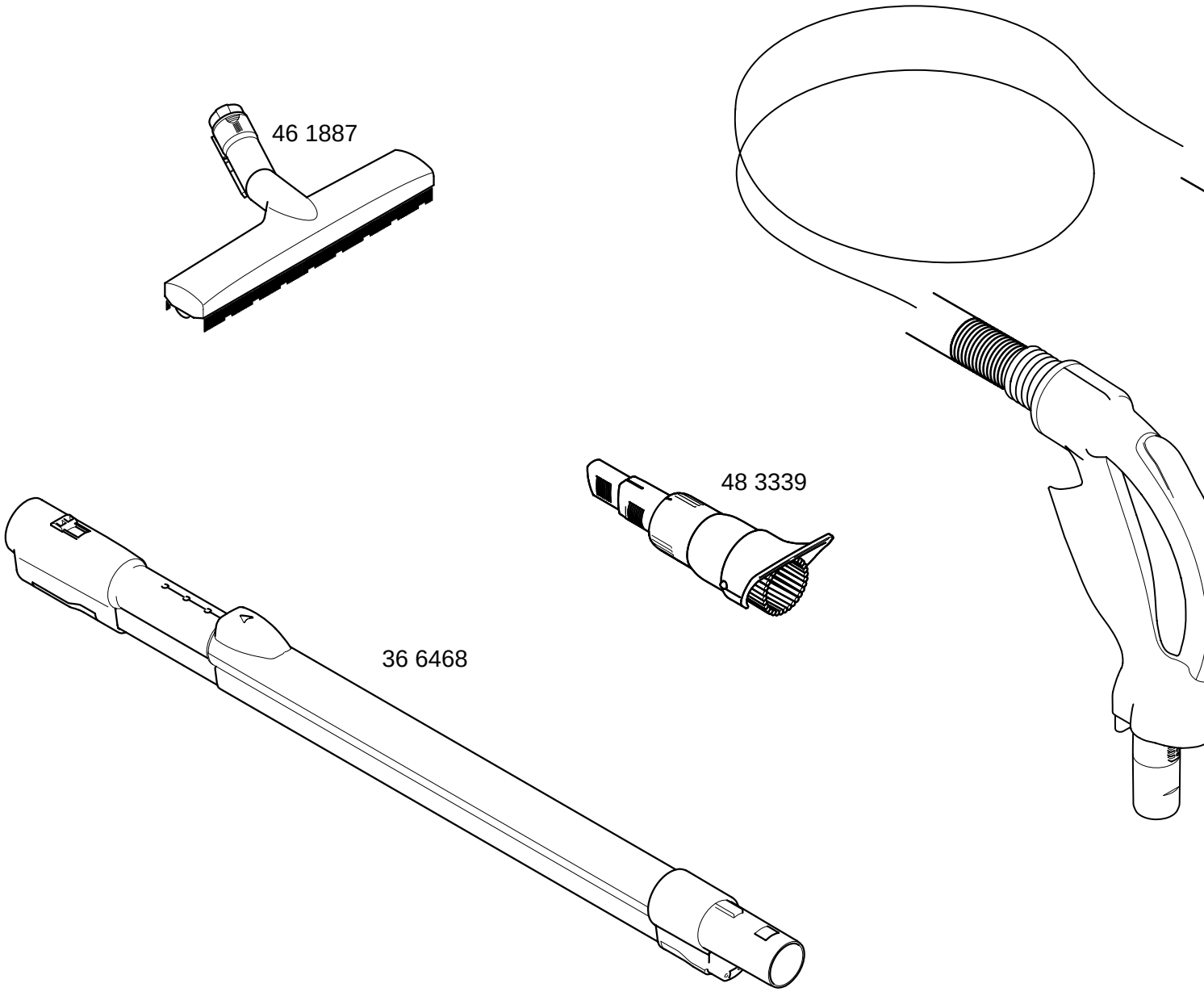

e171470-5/4

BOSCH

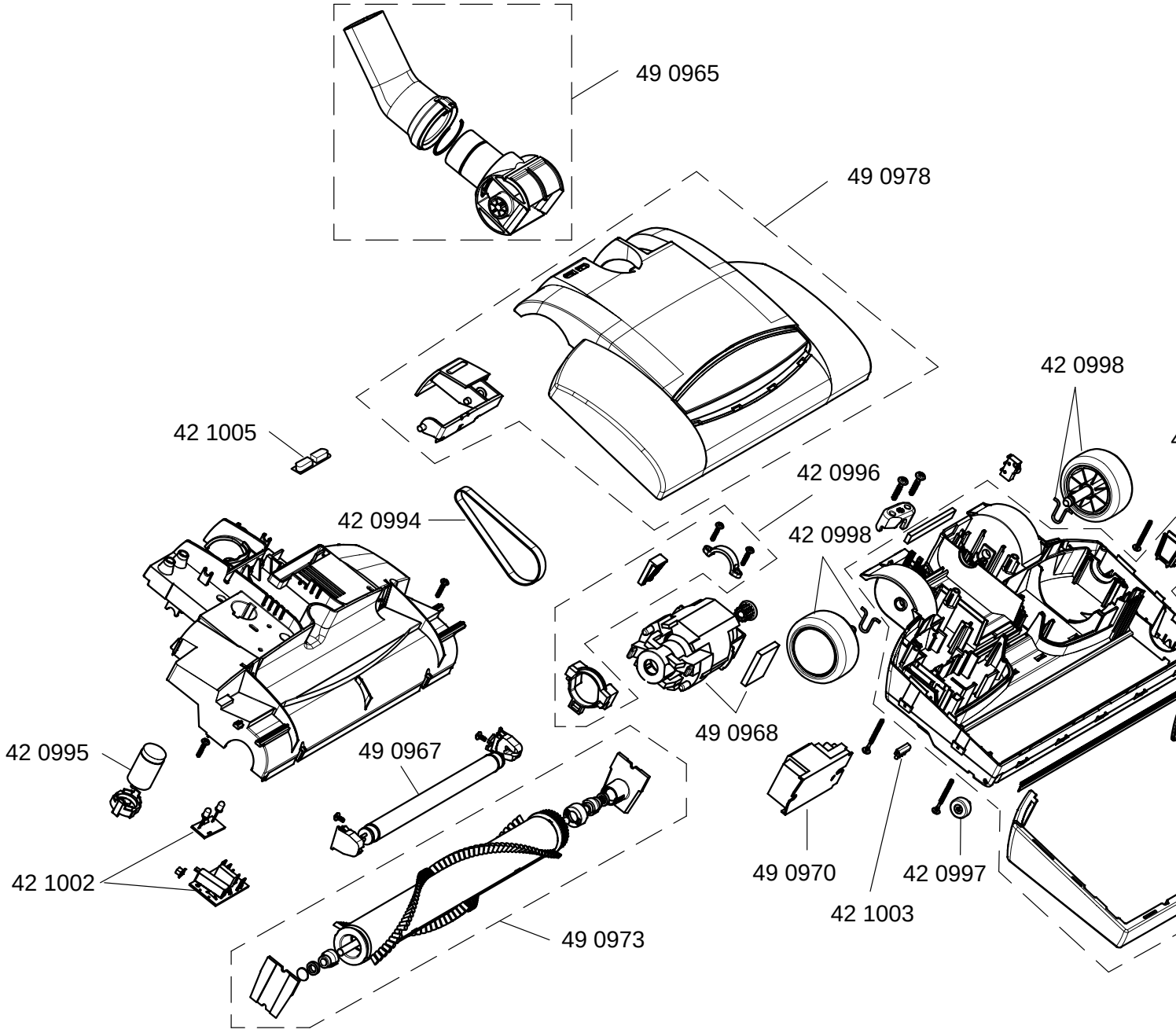

e171470-5/5