CANISTER VACUUM

3580 SERIES

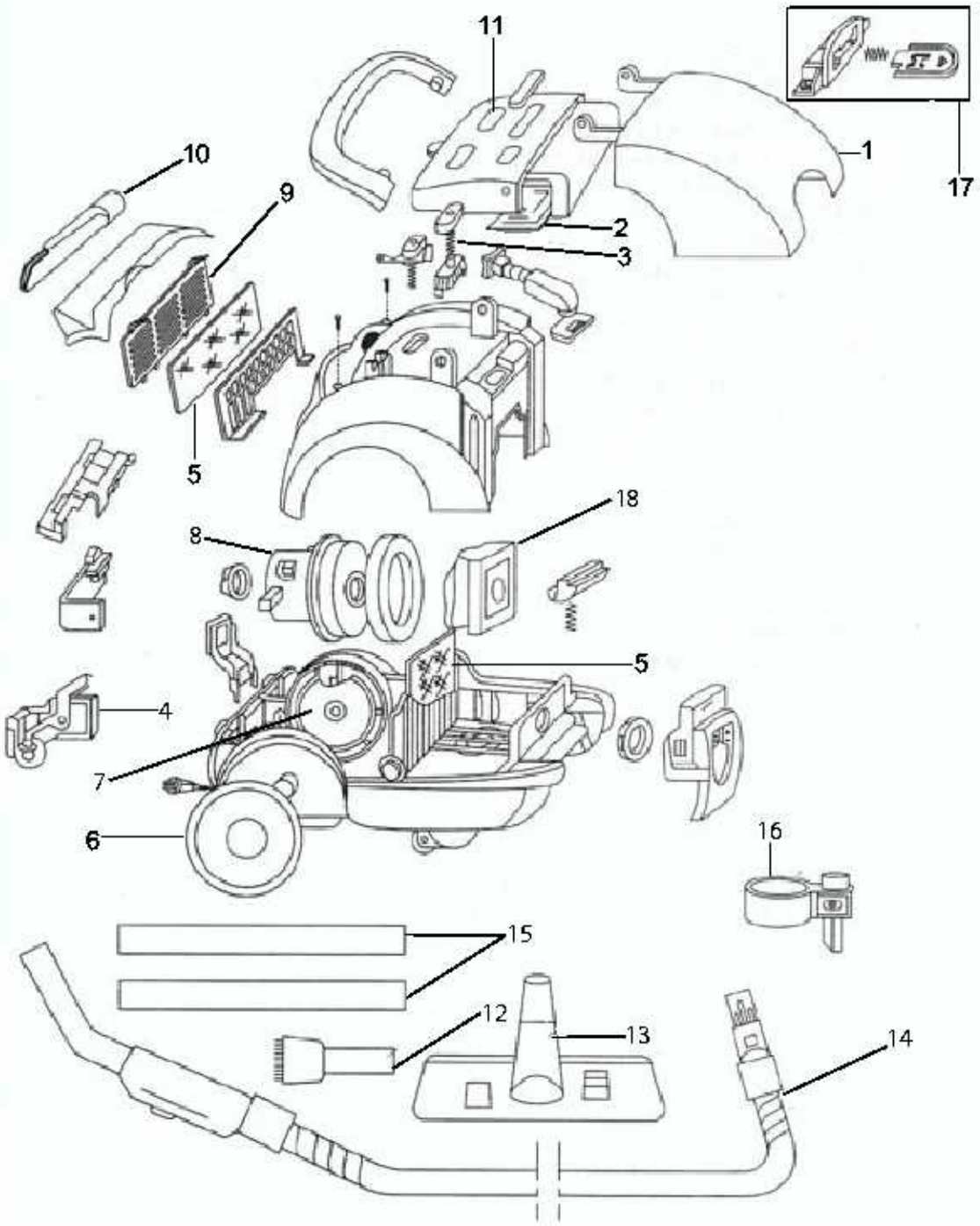

©2003 BISSELL Homecare, Inc.

CANISTER VACUUM

3580 SERIES

KEY	PART NO		DESCRIPTION			
1	0102901		Front Cover			
2	0106024		PC Boards (2)			
3	0108876		Switch			
4	0102798		Cord Reel Release Assy			
5	2100258		Filter Kit - Front & Rear			
6	0109773		Rear Wheel			
7	NLA		Cord Reel Assy			
8	0106022		Motor			
9	0106958		Plate Grill			
10	2109149		Crevice Tool			
11	0102902		Panel Cover			
12	2100451		Dusting Brush			
13	2100450		Floor Brush			
14	2104651		Hose Assy			
15	2109622		Extension Wand (2)			
16	0109623		Wand Storage Clip - 3580			
16	2109634		Wand Storage Clip - 3580M			
17	NLA		Cover Latch			
18	32023		Bags			
xx	2100061		Upholstery Tool			
xx	0105719		User's Guide			