This Owner's Manual is provided and hosted by Appliance Factory Parts.

Appliance Factory Parts
Experts in BBQ, Humidifier, & Appliance Parts
1-800-955-7075

ELECTRAPURE EP4000 W/EP-48 POWER NOZZLE Owner's Manual

Shop genuine replacement parts for ELECTRAPURE EP4000 W/EP-48 POWER NOZZLE

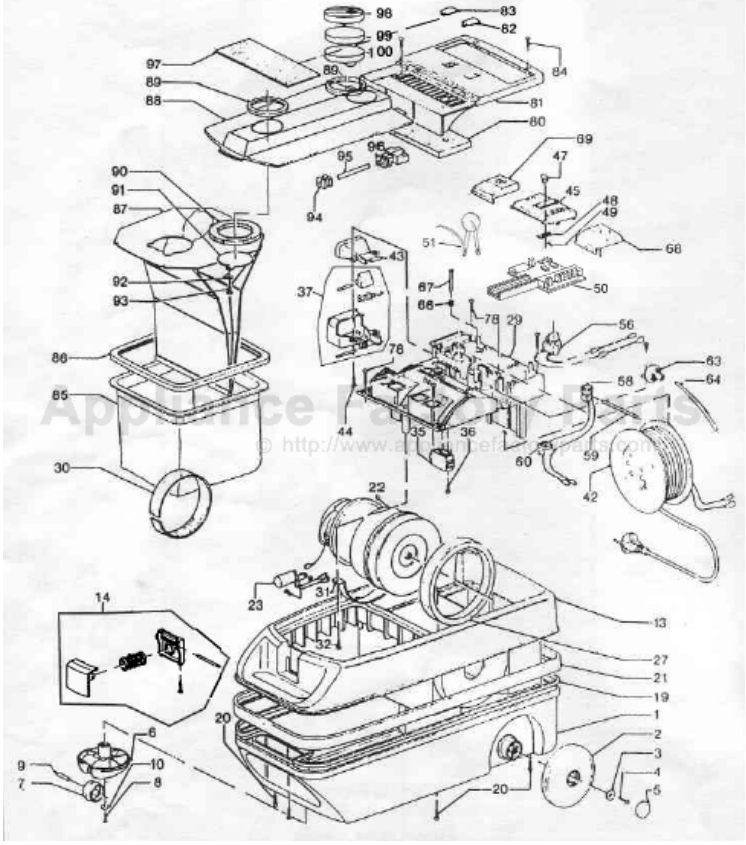

Find Your ELECTRAPURE Vacuum Cleaner Parts - Select From 5 Models

-------- Manual continues below part list --------

Available Replacement Parts for ELECTRAPURE EP4000 W/EP-48 POWER NOZZLE

FQR-1050	BELT FOR FILTER QUEEN 1 PACK

ELEKTRAPURE Original

CANISTER MAIN BODY EP-4000

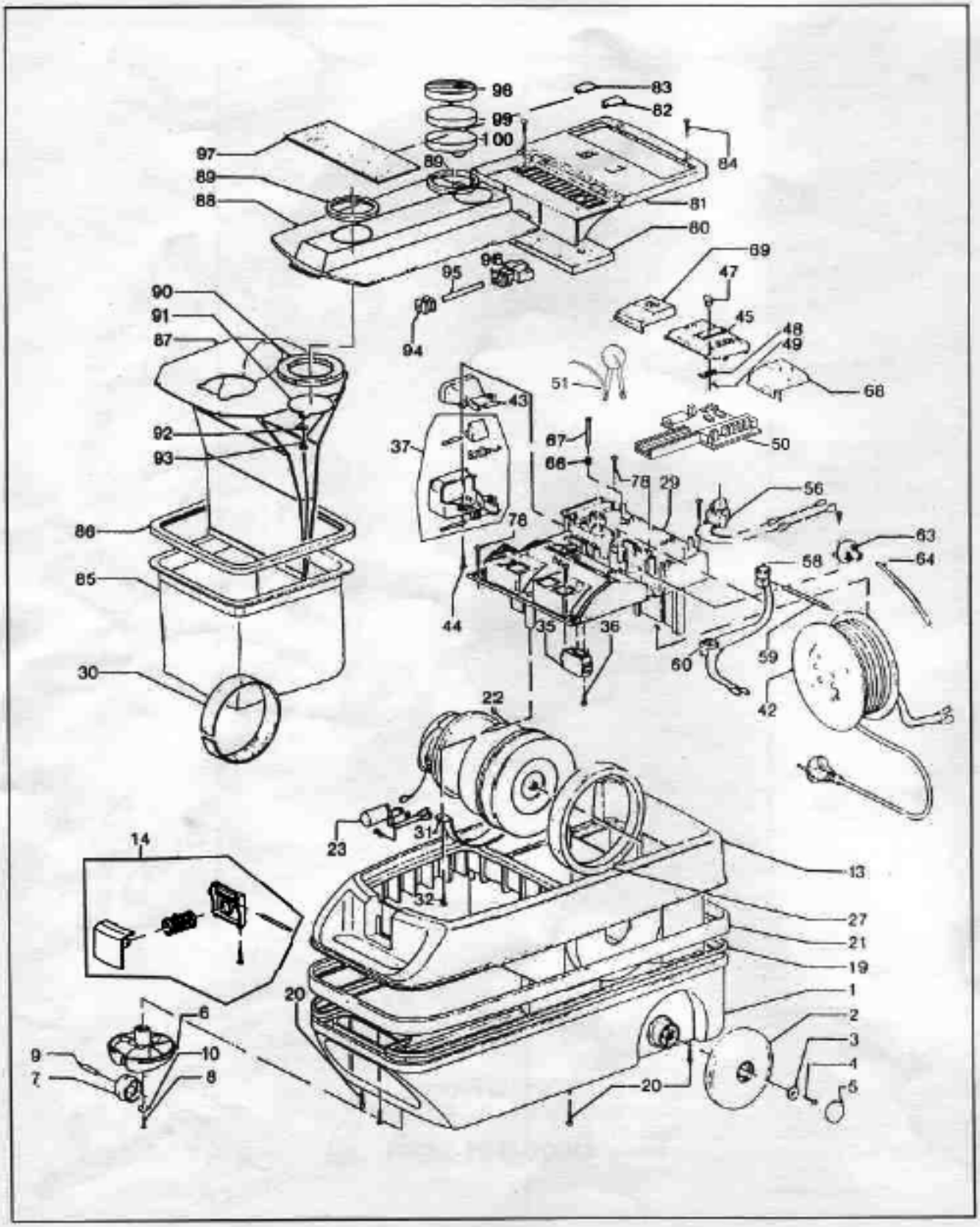

Original ELEKTRAPURE

CANISTER MAIN BODY EP-4000

KEY	PART NO.	DESCRIPTION
1	EP-75000	Lower Housing
2	EP-71000	Rear Wheel
3	EP-77000	Washer
4		* Screw
5	EP-71150	Hub Cap
6	EP-75025	Swivel Castor Housing
7	EP-71105	Swivel Castor
8		* Screw
9	EP-71100	Swivel Castor Axle
10	EP-77015	Washer
13	EP-75005	Upper Housing
14	EP-75060	Latch Ass'y
19	EP-76020	Sealing Strip
20		*Screw
21	EP-74000	Bumper
22	EP-60000	Motor, Suction
23	EP-36000	Thermo Coupling
27	EP-76015	Lower Motor Ring, Rubber
29	EP-76016	Motor Support
30	EP-76010	Middle Motor Ring, Rubber
31	EP-75050	Motor Clamp Metal
32		*Screw
35	EP-36015	Terminal Block Ass'y
37	EP-75032	Lower Cord Brake Housing Ass'y
42	EP-30750	Cord Reel Ass'y
43	EP-75030	Upper Cord Brake Housing
44		*Screw
45	EP-75034	Cover Plate, Power Selector
47	EP-75035	Power Selector Slide
48	EP-75040	Locking Plate, Slide Selector
49	EP-75045	Clamping Pin
50	EP-36010	Circuit Board Ass'y
51	EP-36005	Surge Protector
56	EP-34000	On-Off Switch
58	EP-36020	Full Bag Indicator PC Board & LED
59	EP-34512	4" Tubing
60	EP-36030	Receptacle, Power Nozzle
63	EP-34010	Vacuum Switch
64	EP-34510	10" Tubing, Vacuum Switch
66	EP-77005	Spring, Cord Release Plunger
67	EP-77010	Cord Release Plunger
68	EP-34505	On-Off Pedal
69	EP-34500	Cord Reel Pedal
80	EP-18020	Noise Muffling Filter
81	EP-75010	Motor Unit Cover Plate
82	EP-75012	Lens, Full Bag Indicator
83	EP-75013	Cover, Power Nozzle Connection
84		*Screw
85	EP-12000	HEPA Cloth Bag
		With Rubber Seal (#86)
86	EP-76022	Bag Seal Gasket (Rubber)
87	EP-1400	Paper Bag, Micron Filtration
		With Dust Lock 6 Pk
88	EP-75015	Lid Ass'y
89	EP-76000	Ring Gasket, Lid
90	EP-76005	Sealing Ring Foam Gasket
91	EP-76025	Rubber Check Valve
92		*Washer
93		*Screw
94	EP-75065	Retainer, Vacuum Tube
95	EP-75070	Rigid Vacuum Tube
96	EP-75075	Connecting Block Vacuum Tube
97	EP-18030	Elecktra Static Exhaust Filter
98	EP-75100	Upper Final Filter Housing
99	EP-18000	Charcoal Filter
99	EP-18040	Foam Scent Pad
100	EP-75105	Lower Final Filter Housing

ELEKTRAPURE Original

POWER NOZZLE EP-48

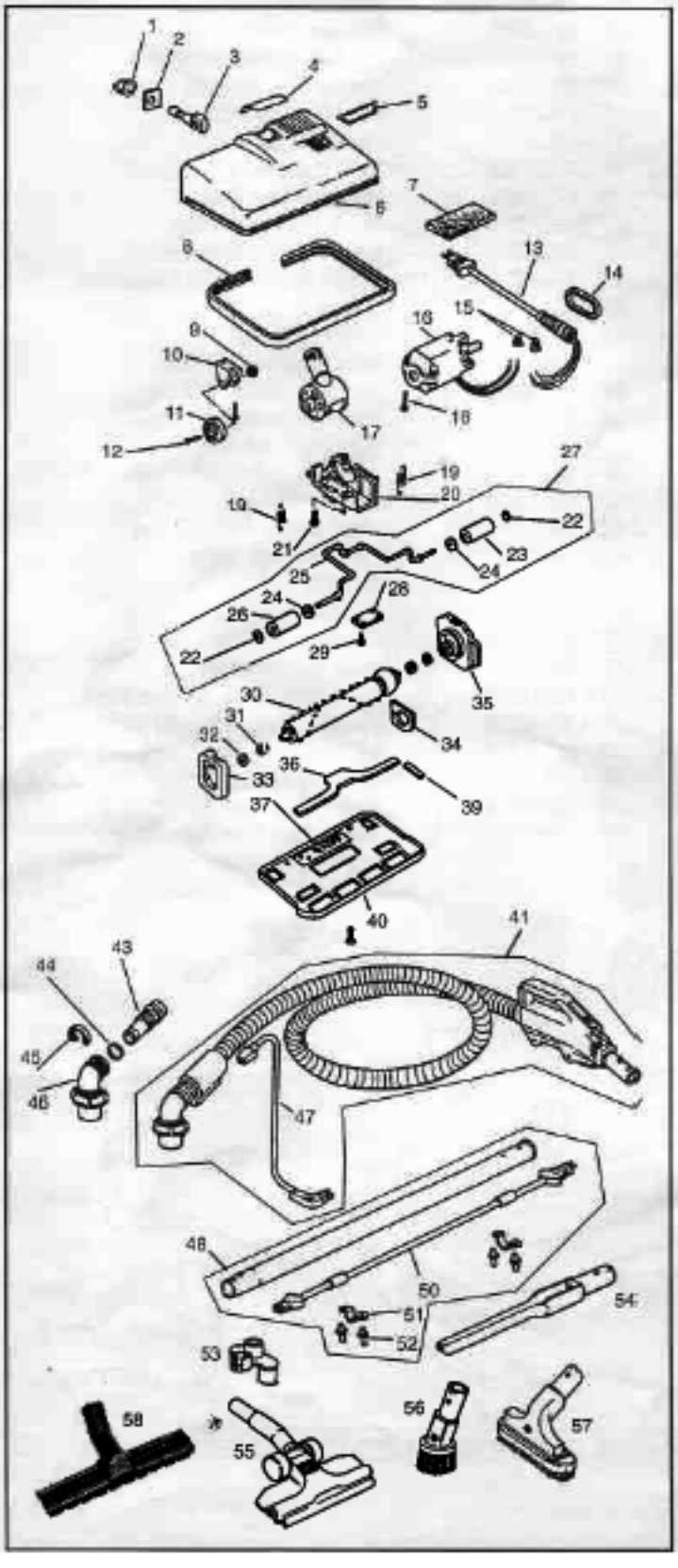

KEY	PART NO.	DESCRIPTION
1	FQ-96221	Height Adjustment Knob
2	FQ-48244	Cam Indicating Plate
3	FQ-72225	Cam, All PN's
4	EP-74015	Info Plate
5	EP-74020	Name Plate
6	EP-72000	PN Body Power Nozzle
7	FQ-48219	Sound Proof Pad
8	EP-74005	Bumper
9	FQ-48251	Retainer Ring
10	FQ-52247	Bracket
11	FQ-48248	Wheel
12	FQ-52248	Wheel Shaft
13	EP-30010	PN Cord Power Nozzle
14	**FQR-1050**	**Belt**
15	**SS-3270**	**Wire Nut**
16	FQ-4808	Motor
16	**FQR-6050**	**Motor**
17	EP-72010	PN Adaptor (Neck) Power Nozzle
18	FQ-48218	Screw
19	FQ-48284	Spring
20	EP-72015	Adaptor Retainer
21	FQ-31719	Screw
22	FQ-48276	Pushnut Fastener
23	FQ-52283R	Roller, Right
24	FQ-48243	Nylon Washer
25	FQ-52281	Roller Arm
26	FQ-52283L	Roller Left
27	FQ-5222	Roller Arm Ass'y
28	FQ-48282	Roller Arm Retainer Plate
29	FQ-31719	Screw
30	FQ-4821	Brushroll
30	**FQR-2030**	**Brushroll Ass'y With Ends**
31	FQ-48246	Washer - Steel
32	FQ-48216	Washer - Fiber
33	FQ-4823	Brush Bearing (Small)
34	FQ-52228	Dirt Seal
35	FQ-5223	Brushroll Bearing (Large)
36	FQ-48280	Sealing Gasket (Long)
37	EP-72025	Instruction Label
39	FQ-48279	Sealing Gasket (Short)
40	FQ-5224	Bottom Plate Ass'y
41	EP-40010	Electric Hose Ass'y
43	EP-45000	Hose Adaptor
44	EP-76030	Felt Strip
45	EP-72030	Clamp
46	EP-45010	Hose Elbow
47	EP-30015	Pigtail - Hose To Canister
48	EP-50000	Wand Ass'y
50	EP-30020	Wand Cord
51	FQ-48305	Cord Clip
52	FQ-48329	Pop Rivet (Cord)
53	EP-57000	Tool Holder
54	EP-54000	Crevice Tool
55	EP-55000	Floor Tool
56	EP-53000	Dust Brush
57	EP-52000	Upholstery Tool W/ Brush
58	EP-55010	Floor Brush, 12" Horse Hair Optional