This Owner's Manual is provided and hosted by Appliance Factory Parts.

Appliance Factory Parts
Experts in BBQ, Humidifier, & Appliance Parts
1-800-955-7075

Eureka 5840A Owner's Manual

Shop genuine replacement parts for Eureka 5840A

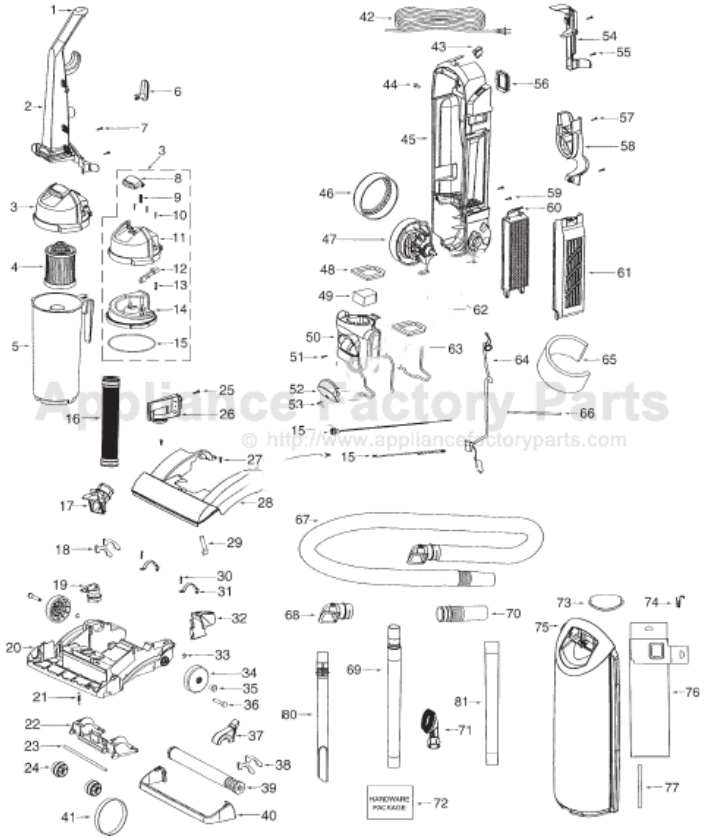

Find Your Eureka Vacuum Cleaner Parts - Select From 855 Models

-------- Manual continues below part list --------

Available Replacement Parts for Eureka 5840A

e-39266	BELT OEM EUREKA EXTENED LIFE 1 PACK
E-61830	STYLE HF5 EUREKA HEPA FILTER
E-71492	WAND, NESTING W/CREVICE TOOL
e-60990-2	BRUSH
E-54943	Spring,
E-39173A-119N	Front wheel
HR-3500	HEADLIHT BULB
E-71725-313N	ADAPTER-HOSE
E-61865-4	hose assembly cartoned
ER-2028	ROLLER

EUREKA Original & Replacement

LITESPEED UPRIGHT

Paper Bag Models 5810A, 5810A-1

Dirt Cup Models 5740A, 5740A-1, 5840A, 5840AV, 5843AV, 5843AZ, 5844AV, 5844AZ, 5846AH, 5846AH-1, 5847AV, 5847AVX, 5847AZ

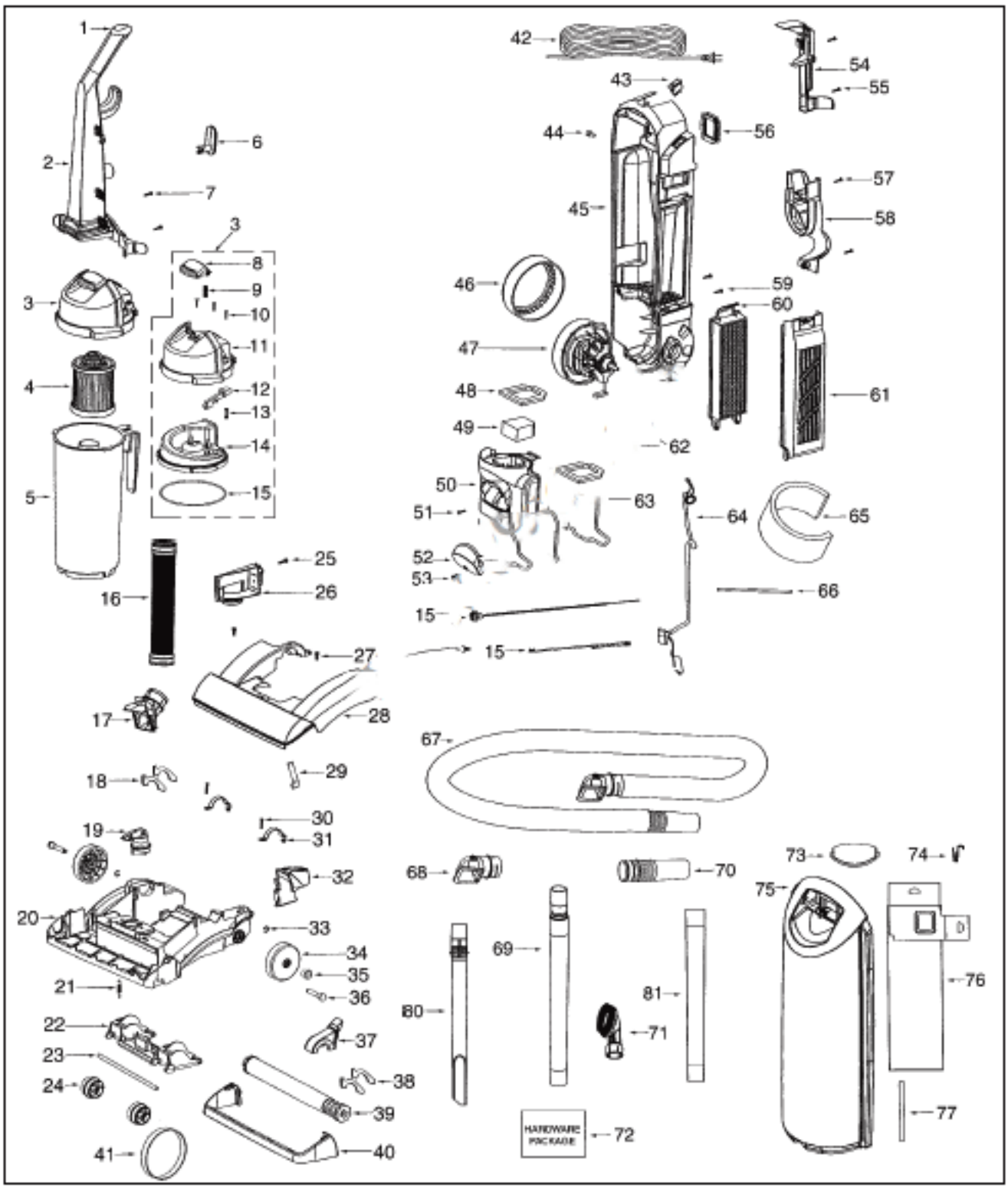

Original & Replacement **EUREKA**

LITESPEED UPRIGHT

Paper Bag Models 5810A, 5810-A-1

Dirt Cup Models 5740A, 5740A-1, 5840A, 5840AV, 5843AV, 5843AZ, 5844AV, 5844AZ, 5846AH, 5846AH-1, 5847AV, 5847AVX, 5847AZ

KEY	PART NO.	DESCRIPTION
1	E-71235-119N	Handle Cap
2	E-71473	Handle Assembly
3	E-71537-1	Cyclone Assembly
4	E-61825	Dust Cup Filter Style DCF3
4	**ER-1830**	**Dust Cup Filter Style DCF3**
5	E-61864-1	Dust Cup Assembly
6	E-70864A-119N	Upper Cord Hook
7	E-53238-44	Screw
8	E-71479-333N	Dirt Cup Latch
9	E-61866	Spring
10	E-53238-27	Screw
11	E-72004-1	Cyclone Top (Incl. 8-15)
12	E-71785-119N	Filter Catch
13	E-61867	Spring
14	E-71451-119N	Cyclone
15	E-71475	Cyclone Gasket
16	E-72001	Base Hose Assembly
17	N/A	(Order E-72001)
18	E-71673	Base Felt
19	E-71448-333N	Height Adjustment Knob
20	E-61860-1	Base 5740A, 5740A-1
20	E-61877-1	Base 5800 Series
21	E-54943	Spring
22	E-71446-119N	Front Wheel Carriage
23	E-71478	Front Axle
24	E-39173A-119N	Front Wheel
25	E-53238-27	Screw
26	N/A	(Order E-72001)
27	E-61862-1*	Hood 5740A
27	E-60178-1*	Hood 5810A
27	E-61878-2*	Hood 5840A
28	E-53238-44	Screw
29	E-71574	Handle Release Spring
30	E-53238-27	Screw
31	E-71487	Motor Clamp
32	E-71457-333N	Handle Release
33	E-54432	Wheel Retainer E-Clip
34	E-72117-119N	Rear Wheel
35	E-72113	Wheel Bushing
36	E-38590A	Rear Axle
37	E-71741	Belt Cover
38	E-71672	Belt Cover Felt
39	E-61861-1	Brushroll 12 1/2" 5740A, 5740A-1
39	**ER-2020**	**Brushroll 12 1/2" 5740A, 5740A-1**
39	E-61869-1	Brushroll 14 1/2" 5800 Series
39	**ER-2025**	**Brushroll 14 1/2" 5800 Series**
40	E-71456-355N	Nozzle Bumper 5740A, 5740A-1
40	E-71831-355N	Nozzle Bumper 5800 Series
41	E-39266	Belt
41	E-61120	Belt 2 Pk
42	E-38680-29	Power Cord
43	E-39455-1	Switch
44	**SS-3270**	**Wire Nut**
45	E-72126	Rear Housing - Bagless Models
45	E-71744	Rear Housing - Paper Bag Models
46	E-71649	Motor Gasket
47	E-60261-11	Motor
	E-39252-1	Thermostat
48	E-71483	Lower Dirt Cup Gasket
49	E-71480	Pre-Motor Filter
50	E-61863-1	Motor Cover
51	E-53238-27	Screw
52	E-71460-313N	Lens
53	E-53238-44	Screw
54	E-72127	Switch Cover
55	E-53238-27	Screw
56	E-71482	Intake Gasket
57	E-53238-27	Screw
58	E-71460-319N	Tool Holder
59	E-53238-44	Screw
60	E-72006	HEPA Filter Style HF5
60	E-70084-1	**HEPA Filter Style HF5**
59	E-61835	HEPA Filter Insert Style HF6
	E-72006-1	Filter Cover
	E-72103-1	HEPA Insert Cover
62	E-70084	Motor Support Bushing
63	E-71484	Motor Cover Gasket
64	E-71465	Jumper Cord
65	E-38661	Sound Foam
66	E-70651-1	Flexible Tube
67	E-61865-1	Hose Assembly
68	E-71725-313N	Hose Adaptor
69	E-71492	Nested Wands
70	E-70559-119N	Hose Coupling
71	E-60990-2	Combination Brush
72	E-71917	Hardware Package
73	E-71830-333N	Bag Cover Latch 5810A, 5810A-1
74	E-71852	Bag Cover Latch Spring 5810A, 5810A-1
75	E-61880-1	Bag Cover 5810A, 5810A-1
76	E-61820	Paper Bag Style LS 5810A, 5810A-1 3 Pk
77	E-71512	Bag Cover Gasket
78	E-70701-2	Headlight Socket
79	E-57940-2	Bulb
79	**HR-3500**	**Bulb**
80	E-71956A-355N	Crevice Wand
81	E-71973-119N	Outer Wand

N/A = Not Available