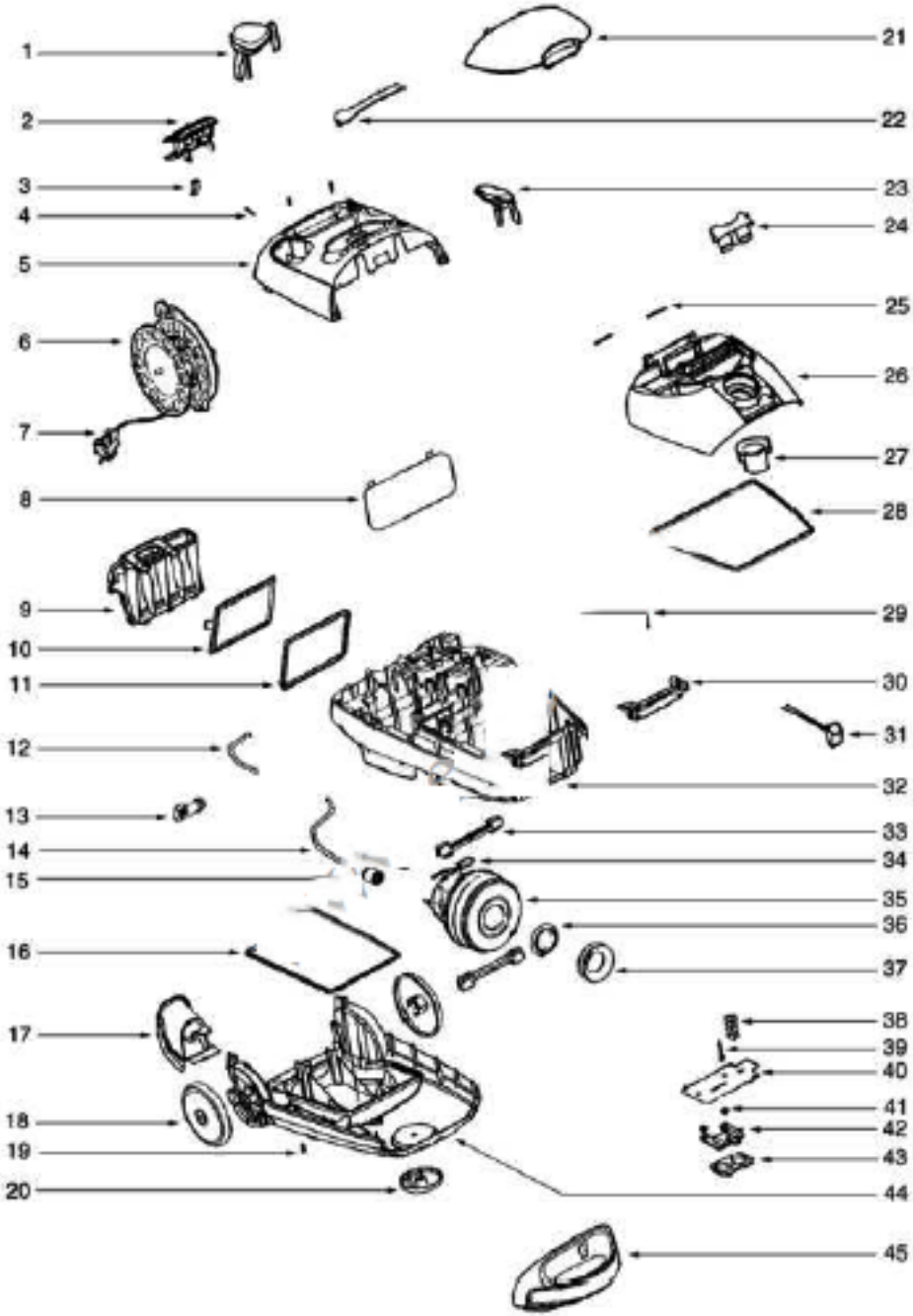
1
2
3
4
5
6
7
8
9
10
11
12
13
14
15
16
17
18
19
20
21
22
23
24
25
26
27
28
29
30
31
32
33
34
35
36
37
38
39
40
41
42
43
44
45

Ref #	Part	Description	Comments	Qty
1	E-54888-3	CORD REWIND BUTTON		
2	E-60636-1	REAR CATCH LEVER		
3	E-60637	SPRING CATCH LEVER		
4	E-61697-2	SCREW PACKAGE		
5	E-61712-1	COVER - PKGD		
6	E-61693	CORD REEL W/CORD		
7	E-54985	CORD SET		
8	E-60541	MOTOR FILTER		
9	E-60476	FILTER FLAP (DARK GREY)		
10	E-61690	MICRON FILTER - STYLE MF1		
11	E-60578	SEAL - EXHAUST FILTER		
12	E-54939-1	HOSE 170MM		
13	E-54893	BAG INDICATOR		
14	E-54914	HOSE 185MM		
15	E-60653	CUSHION		
16	E-60605	COVER SEALING GASKET .750		
17	E-60648-1	CORD GUIDE		
18	E-54895-1	REAR WHEEL		
20	E-61695	FRONT CASTER		
21	E-61708-1	TOP COVER - PKGD		
22	E-54944-3	DISPLAY		
23	E-54889-3	SWITCH BUTTON		
24	E-60651-1	CATCH LEVER (DARK GREY)		
25	E-54894	SHAFT		
26	E-54886-3	LID - BAG COVER		
27	E-60638-1	SLEEVE		
29	E-54892	BAG SUPPORT SPRING		
30	E-54890	BAG SUPPORT (ORANGE)		
31	E-60606	POWER OUTLET		
32	E-61709	UPPER SHELL		
33	E-61694	MOTOR BLOCK		
34	E-61698	THERMOSTAT		
35	E-60650-1	MOTOR ASSEMBLY - CARTONED		
36	E-60634-1	SUPPORT SEAL RING		
37	E-60647-1	SEALING RING		
38	E-54973	SPRING		
39	E-61697-1	SCREW PACKAGE		
40	E-61706-1	CIRCUIT BOARD - PKGD		
41	E-60635	INSULATING WASHER		
42	E-60632	FLAP PLATE		
43	E-60608	FLAP SEAL		
44	E-61710	LOWER SHELL		
45	E-60652-1	HANDLE		
46	E-61703-1	WIRE		
47	E-61704	SOUND FOAM		

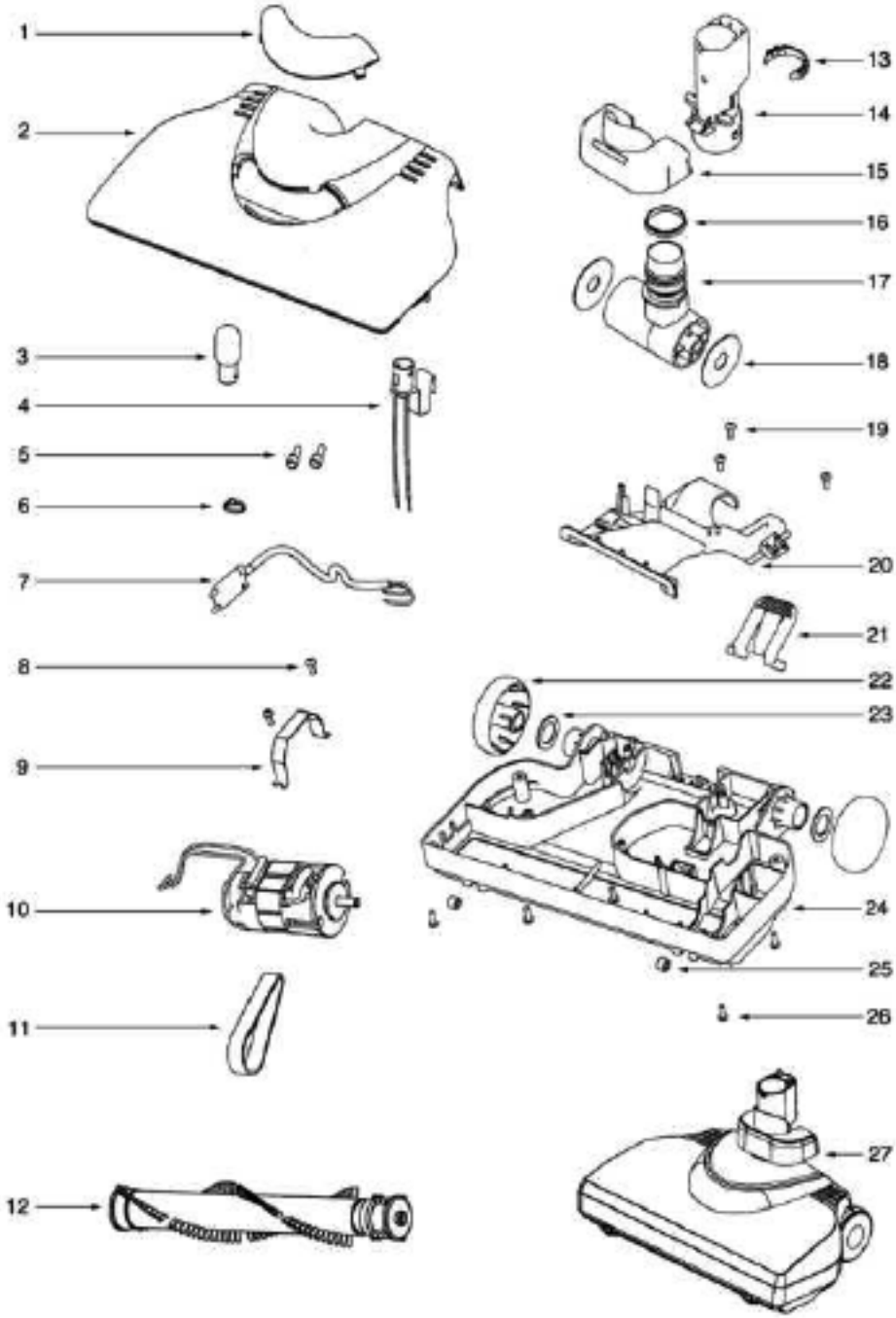
1
2
3
4
5
6
7
8
9
10
11
12
13
14
15
16
17
18
19
20
21
22
23
24
25
26
27

Ref #	Part	Description	Comments	Qty
1	E-39561	LENS		
2	E-54672-30	HOOD & GRAPHICS ASSY - PK		
3	E-59045	HEADLIGHT		
4	E-39559	LAMP SOCKET		
5	E-60192-1	WIRE SPLICE 5		
6	E-46713-5	TIE - CABLE (PURCHASED)		
7	E-39566	POWER CORD		
8	E-53238-8	SCREW PACKAGE		
9	E-72315	STRAP - MOTOR		
10	E-54343-1	MOTOR ASSEMBLY - PACKAGED		
11	E-58065A	BELT PACKAGE ASSY - STYLE		
12	E-60279-1	DISTURBULATOR ASSY - CTND		
13	E-39564-355N	C- RING		
14	E-72324	COUPLING		
15	E-72325	QUICK DISCONNECT PEDAL		
16	E-39563	O- RING		
17	E-72329	T-JOINT ASSEMBLY		
18	E-57992	GASKET - FELT		
20	E-39562	T-JOINT COVER ASSY		
21	E-39560	FOOT PEDAL		
22	E-72327	WHEEL - REAR		
23	E-56180	FELT WASHER		
24	E-54639-3	BASE ASSEMBLY - POWER HEA		
25	E-60963	FRONT WHEEL ASSEMBLY		
27	E-54575-27	POWER HEAD ASSEMBLY - CAR		

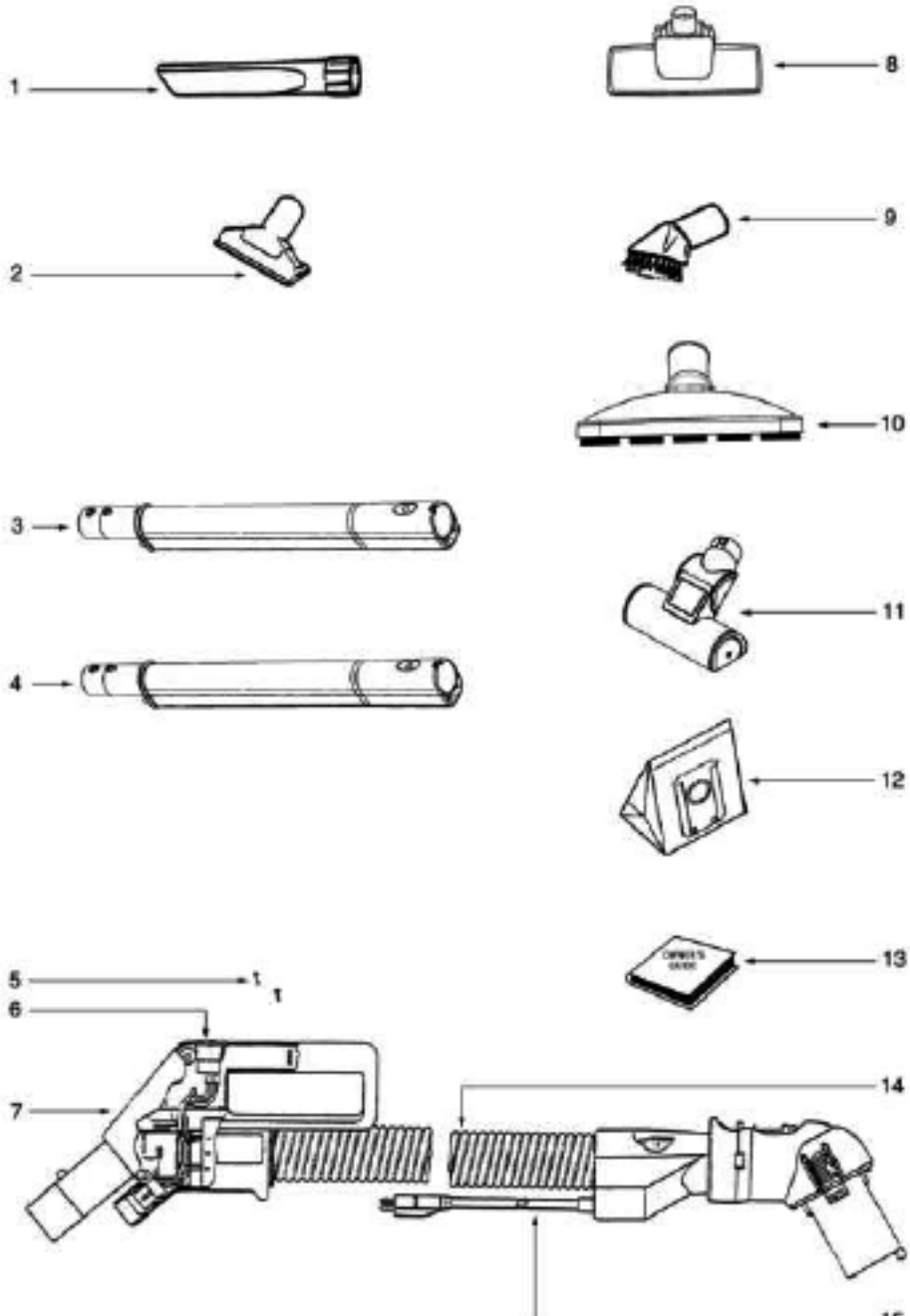
1
2
3
4
5
6
7
8
9
10
11
12
13
14
15

Ref #	Part	Description	Comments	Qty
1	E-54905	CREVICE TOOL - 8"		
2	E-54904	UPHOLSTERY NOZZLE		
3	E-39422A-1	Direct Connect Wand Assembly	black wands	
5	E-53257-1	SCREWS - PACKAGE 10		
6	E-39420-1	SWITCH & CONNECTOR ASSEMB		
7	E-60852-2	HANDLE ASSEMBLY - PACKAGE		
8	E-39134-6	DELUXE FLOOR NOZZLE ASSEM		
9	E-54900	DISPLAY RACK		
10	E-60816	FLOOR & WALL BRUSH ASSEMB		
11	E-28612A	TURBO NOZZLE ASSY (MODEL		
12	E-60294A	BAG PKG ASSY (STYLE EX)		
13	E-71428A	OWNER'S GUIDE		
14	E-60782-3	HOSE ASSY - CTND		
15	E-27730-3	HOSE CONNECTOR CORD ASSEM		
4	E-39422A-3	DIRECT CONNECT WAND ASSEM	grey wands	