This Owner's Manual is provided and hosted by Appliance Factory Parts.

Appliance Factory Parts
Experts in BBQ, Humidifier, & Appliance Parts
1-800-955-7075

Eureka EP9110A Owner's Manual

Shop genuine replacement parts for Eureka EP9110A

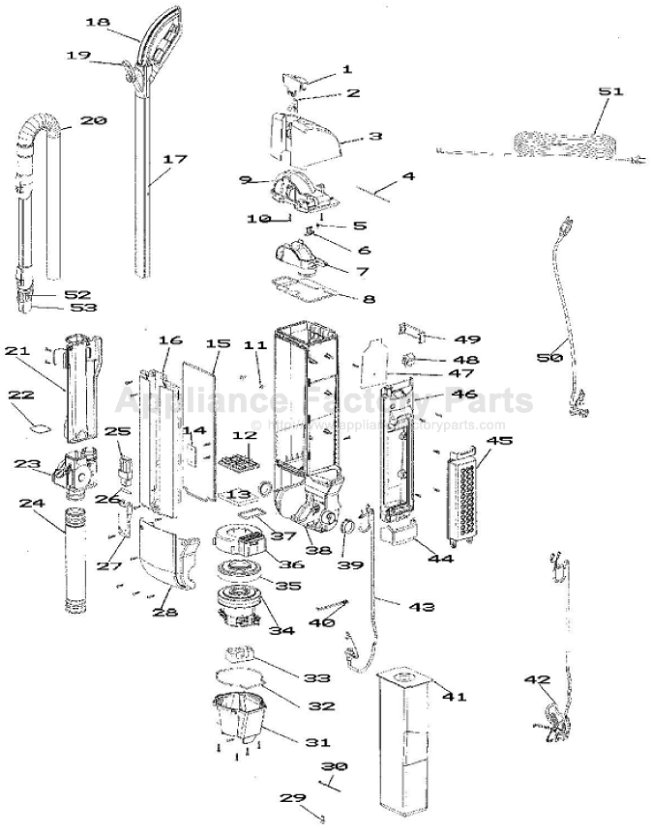

Find Your Eureka Vacuum Cleaner Parts - Select From 853 Models

-------- Manual continues below --------

Body - EP9110A

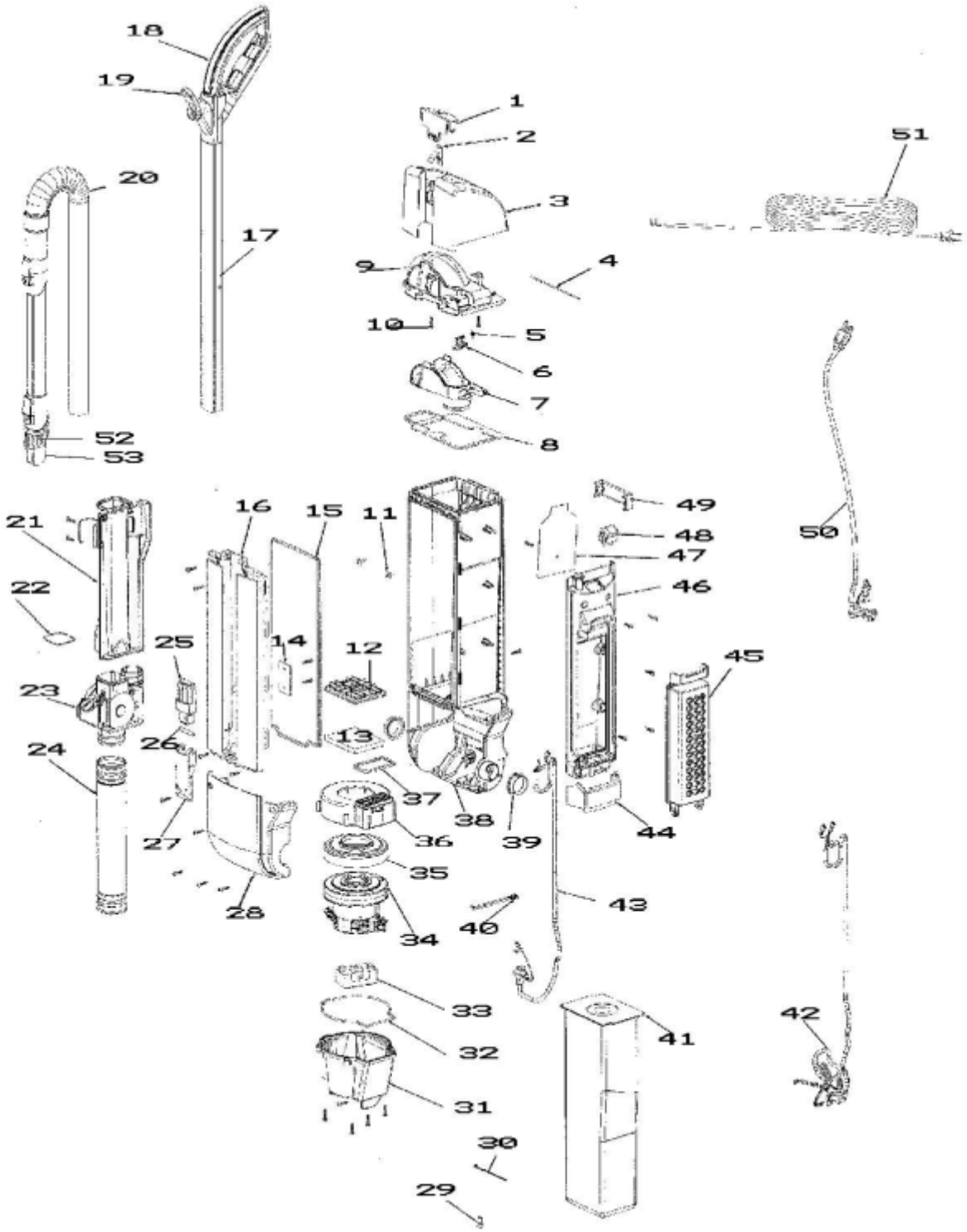

Body - EP9110A

Ref #	Part	Description	Comments	Qty
1	77281A-355N	LATCH - TOP COVER		
2	77528A	SPRING - TOP COVER		
3	77273-119N	COVER - TOP		
4	77844A	HINGE PIN - TOP COVER		
5	63867	SPRING PACKAGE		
6	77282-355N	LEVER - BAG IN PLACE		
7	77270-355N	INLET - BAG		
8	77274	GASKET - TOP COVER		
9	77271-355N	INLET - COVER		
10	53238-27	SCREW PACKAGE		
11	60160	SCREW PACKAGE 10		
12	77480-355N	GRILL - PRE-MOTOR FILTER		
13	77883	MEDIA - FILTER		
14	77495	CLAMP - PLATE		
15	77289	GASKET - FRONT COVER		
16	77267-119N	COVER - FRONT		
17	77294-5	UPPER HANDLE ASSEMBLY		
18		Use item 17		
19	77292-355N	QUICK CORD RELEASE		
20	63864-2	HOSE & WAND ASSY - CARTON		
21	77275-355N	DIRT TUBE		
22	78310	GASKET - DIRT TUBE		
23	77125	VALVE ASSEMBLY		
24	70051-380N	HOSE - CONNECTOR		
25	77284-355N	ADAPTER - LOWER CORD HOOK		
26	77529	SHAFT - CORD HOOK		
27	77283-355N	LOWER CORD HOOK		
28	77266-119N	COVER - MOTOR		
29	60192-1	WIRE SPLICE 5		
30	46713-5	TIE - CABLE (PURCHASED)		
31	77285-313N	SHROUD - MOTOR		
32	77818	GASKET - MOTOR SHROUD		
33	77295A	GROMMET - SUCTION MOTOR		
34	63865	MOTOR ASSEMBLY - CARTONED		
35	77288-316N	GASKET - MOTOR CAN		
36	77287-119N	SHROUD - MOTOR COVER		
37	78129	GASKET - COVER MOTOR SHRO		
38	78261-6	REAR HOUSING ASSEMBLY		
39	77141-119N	BUSHING - NYLON		
40	39252-19	THERMOSTAT & TERMINAL ASS		
41	63262A	BAG ASSY PACKAGE (A&H SEN		
42	77527	JUMPER CORD - UPPER		
43	77530	JUMPER WIRE - MOTOR		
44	77291-355N	COVER - HEPA SHROUD		
45	78442A	HEPA FILTER ASSY (WASHABL		
46	77286-355N	SHROUD - HEPA		
47	78117	VULCANIZED PAPER		
48	77816-1	SWITCH - ROCKER		
49	15854-1	HANDLE ASSEMBLY - PACKAGE		
50	79073	SUPPLY CORD ASSEMBLY		
51	76224	CORD - EXTENSION (50FT)		
52	77853	DUST BRUSH ASSEMBLY		
53	77856-355N	WAND TIP		
not pictured	80960	owners guide		
	78742SV	PACKAGE - HARDWARE		

Base & Hood - EP9110A

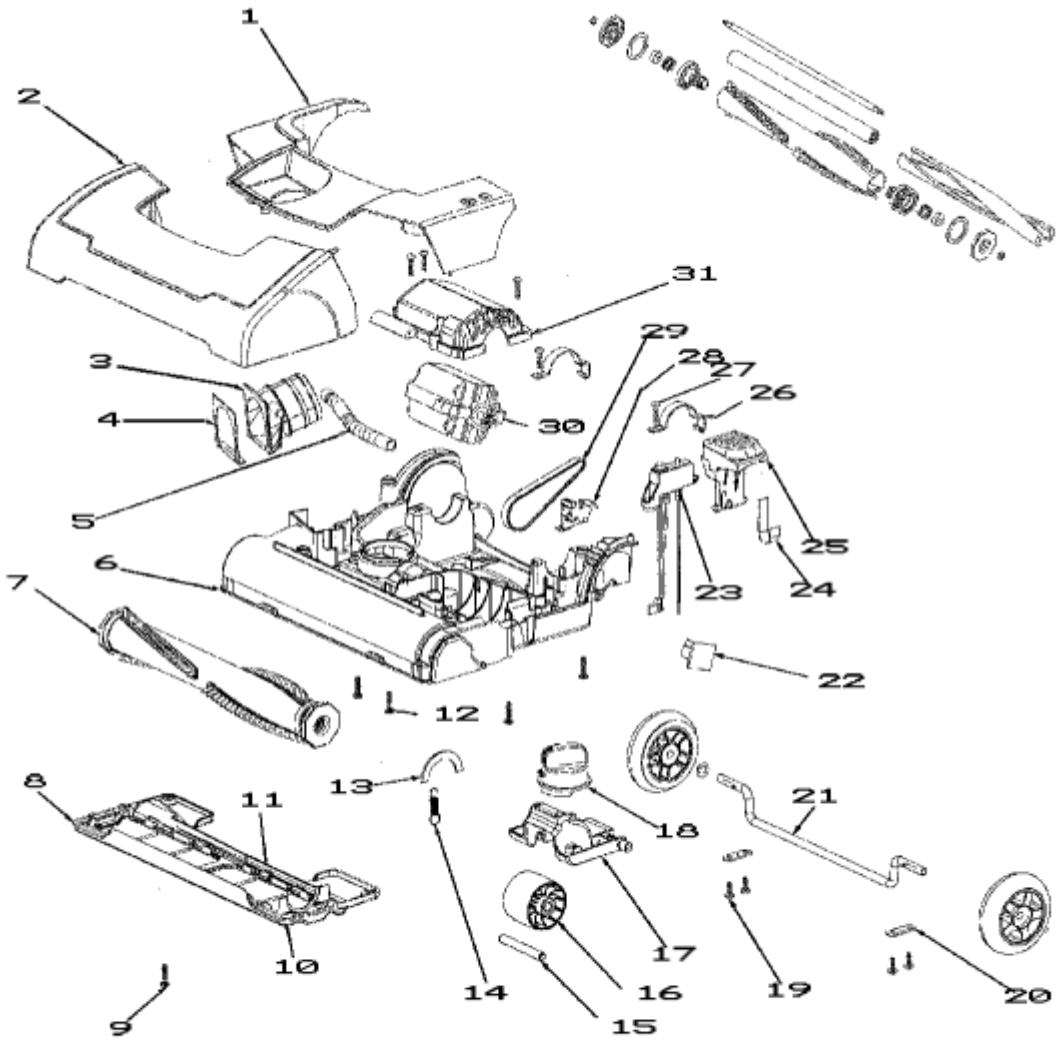

Base & Hood - EP9110A

Ref #	Part	Description	Comments	Qty
1	63862-4	HOOD ASSEMBLY - PACKAGED		
2	63863-4	GUARD, CARRIER & GRPHCS-P		
3	77134A-119N	ADAPTER - BASE		
4	77130	GASKET - ADAPTER		
5	77822	TUBE - COOLING		
6	63857	BASE ASSEMBLY - PACKAGED		
7	63858-1	BRUSHROLL - CARTONED		
	53158	LOCK NUT PACKAGE		
	76995	END CAP		
	77124	WASHER - FELT		
	53114	BEARING - DISTURBULATOR P		
	76993	PULLEY		
	76991	BRUSHROLL - CARTONED		
	63859-1	BRISTLE STRIPS - PACKAGED		
	76996	RETAINER - BEARING		
	53115	PACKAGE - TOLERANCE RING		
8	77143	SOLEPLATE, FELT & GASKET ASSY		
9	54669-6	SCREW PACKAGE		
10	78580	GASKET - SOLEPLATE		
11	78907	GASKET - SOLEPLATE REAR		
12	53238-27	SCREW PACKAGE		
13	77129	FELT - SOLEPLATE		
14	54943	SPRING PACKAGE		
15	77411	FRONT AXLE		
16	77117-355N	FRONT WHEEL W/IN MOLD BUS		
17	77116-355N	WHEEL - CARRIAGE		
18	77114-380N	KNOB - HEIGHT ADJUSTMENT		
19	53238-11	SCREW PACKAGE		
20	53201	AXLE CLAMP - PACKAGED		
21	63860	REAR WHEEL & AXLE ASSEMBL		
22	78652A	VULCANIZED PAPER - MICROS		
23	78290-1	RETAINER ASSEMBLY		
24	77136	SPRING - HANDLE RELEASE		
25	77135-380N	HANDLE RELEASE		
26	77140	CLAMP - MOTOR		
27	53238-27	SCREW PACKAGE		
28	59397-7	MICRO SWITCH & BRACKET AS		
29	77133	BELT - POLY V		
30	63861	BRUSHROLL MOTOR ASSY - CT		
31	77132-119N	COVER - BRUSHROLL MOTOR		
	79380	GASKET - BRUSHROLL MOTOR		