This Owner's Manual is provided and hosted by Appliance Factory Parts.

Appliance Factory Parts
Experts in BBQ, Humidifier, & Appliance Parts
1-800-955-7075

HOOVER 5468
Owner's Manual

Shop genuine replacement parts for HOOVER 5468

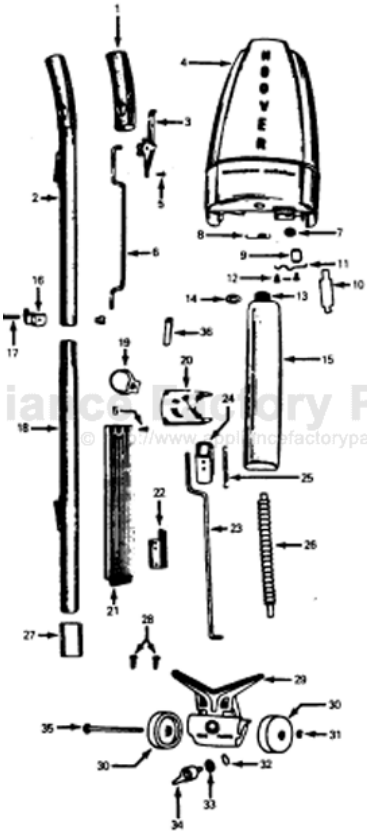

Find Your HOOVER Vacuum Cleaner Parts - Select From 1456 Models

-------- Manual continues below part list --------

Available Replacement Parts for HOOVER 5468

12738	THUMB SCREW ASSEMBLY
KO-2410	Felt Buffing Pads, Pair.

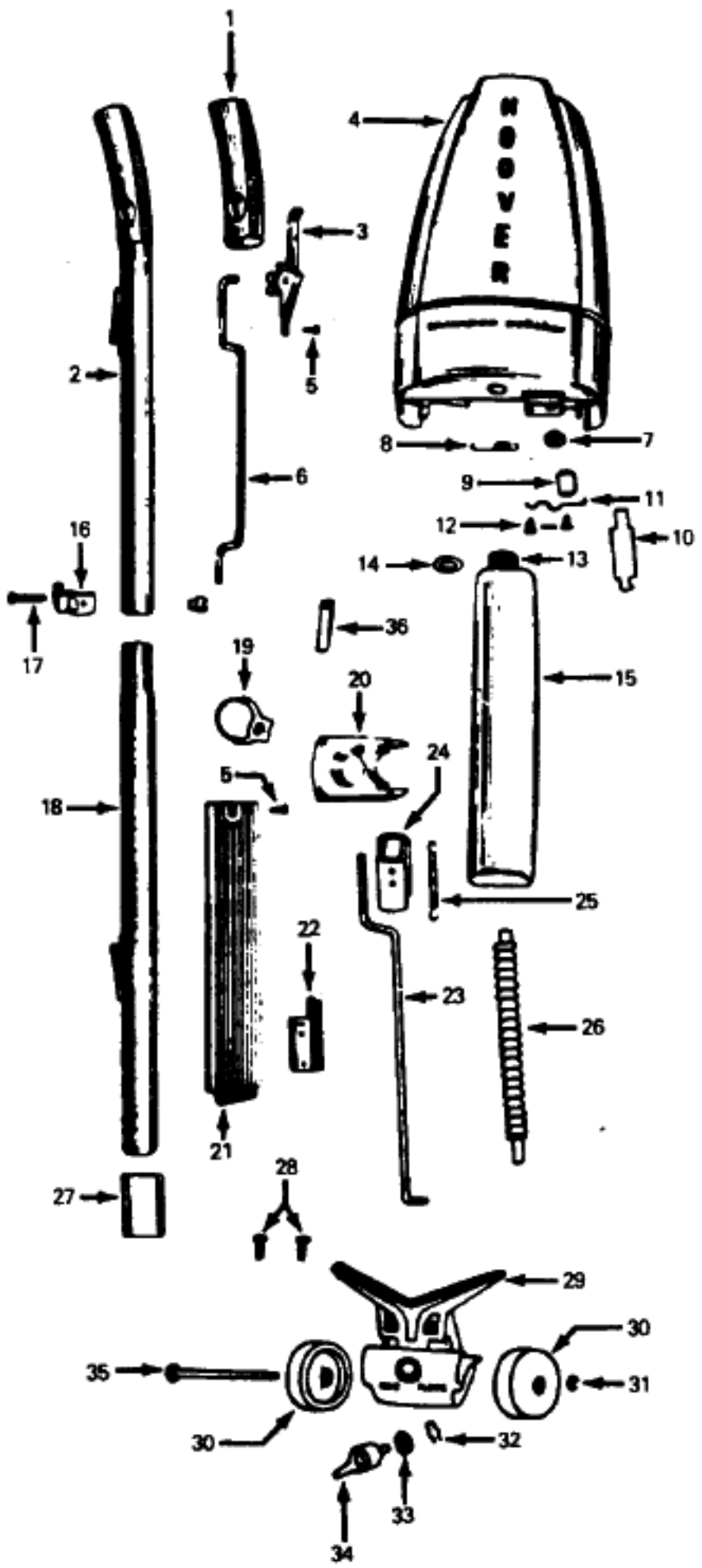

Ref. No.	Part No.		Description
1	12230JM	+	Handle Grip
	35636CC	+	Upper Handle - 5460, 5466, 5468
	49133A	+	Upper Handle - 5240
	35006A	+	Upper Handle - 5020, 5450
	49137A	+	Handle Assem. - Upper 5130, 5131, 5137, 5350
3	35433JM	+	Control Housing - 5460, 5466, 5468
4	35460AG	+	Detergent Tank - 5460, 5466
	35460BB	+	Detergent Tank - 5468
	35460X	+	Detergent Tank - All Models
5	21465314	*	Screw
6	35405	+	Upper Valve Rod
7	48831	+*	Seal
8	49220	+	Spring
9	35215T	+	Tank Valve
10	49126	+	Tank Valve Depressor
11	35379	+	Valve Closure Support
12	19254	+*	Screw
13	49507	+	Wax Bottle Cap - All Models
14	49506	+*	Washer
15	49187	+	Wax Bottle Assem.
16	35665A	+	Cord Support Clip - 5350
	12910		Cord Clamp - 5130, 5131, 5137
17	48294AW		Handle Bolt & Nut
18	35434R	+	Handle Assem. - Lower Half - 5240, 5460,5466
	35434CC	+	Handle Assem. - Lower Half - 5468
	35007JM		Lower Handle - 5020, 5130, 5131, 5137,5350,5450
19	49219	+	Bottle Latch
20	11902X	+	Detergent Tank Cap
	11902BB	+	Detergent Tank Cap - 5468
21	35456	+	Trim Plate
22	35454DM	+	Cap Retainer
23	612866	+	Lower Valve Rod
24	12465	+	Handle Plug
25	12984AY		Spring
26	17473		Distributor Hose
27	35430	+	Handle Insulator
28	12956	*	Screw
29	18853DN	+	Wheel Carriage & Distr. - All Models
	23348HH	+	Wheel Bracket - Only 5240
30	32175003		Caster Wheel
31	13306	*	Ring
32	12979	*	Ring
33	18249	+*	Washer
34	17234	+	Valve Body
35	35662AY	+	Wheel Shaft - 5460, 5466, 5468
	49114	+	Wheel Shaft - 5240
36	14503	+	Insulating Tube - 5460, 5466, 5468

ITEMS NOT ILLUSTRATED

48750	+*	Pin - 5460, 5466, 5468
35381	+	Distributor - 5240
35005AB	+	Cord Support - 5020,,5240, 5450
35004	+	Cord Support - 5020, 5240, 5450

Motor & Housing

Models 5130, 5131, 5137, 5350, 5460, 5466, 5468

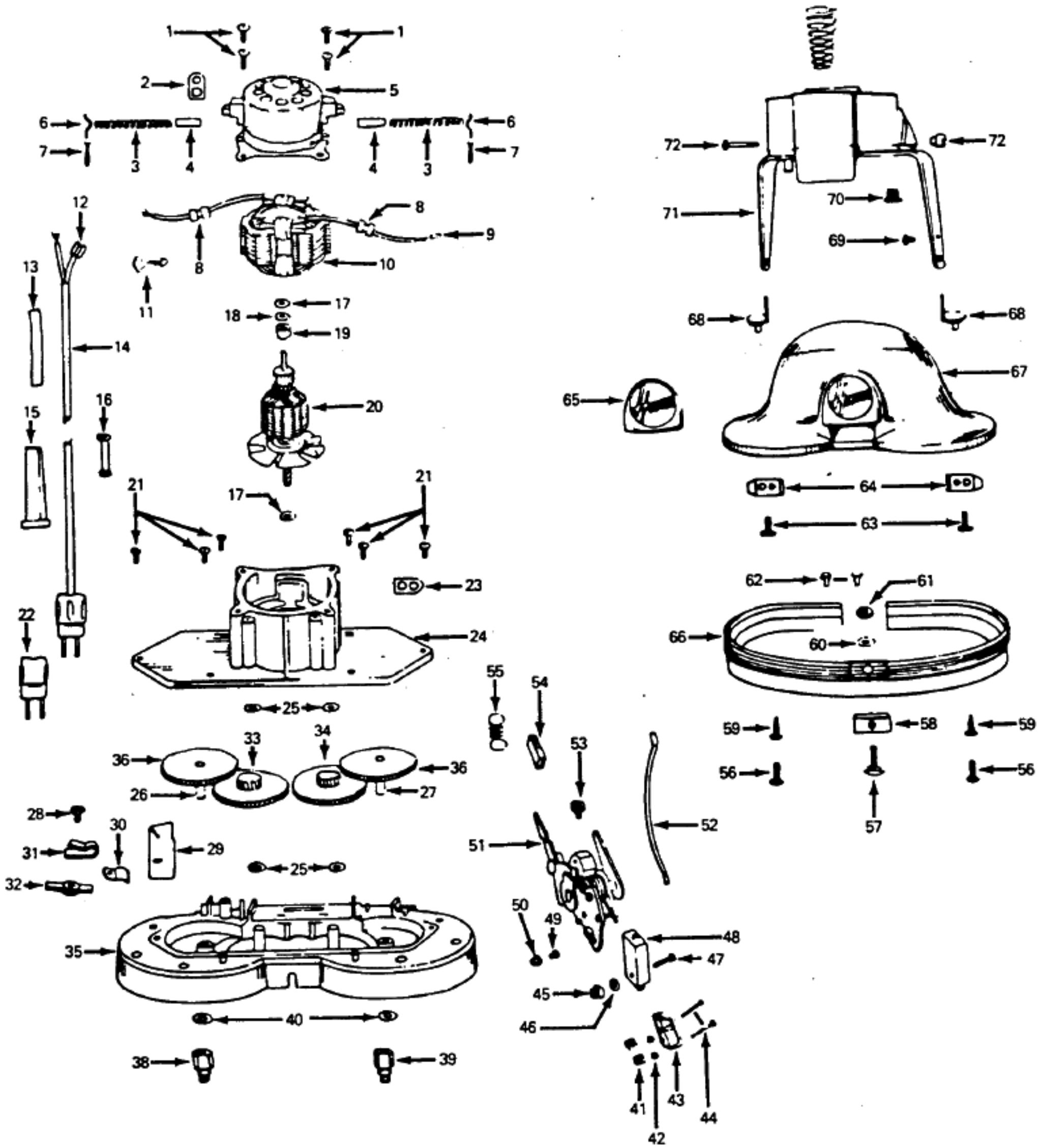

Motor & Housing

Models 5130, 5131, 5137, 5350, 5460, 5466, 5468

Ref. No.	Part No.		Description
1	17001FW	*	Screw
2	13190	+*	Lead Wire Holder
3	49423	+	Motor Brush Spring
4	49351	+	Motor Brush
5	42197002		Motor Cap Assem.
6	49397	+*	Retainer
7	49435	+*	Pin
8	49379	+	Lead Wire Collar
9	14197	+*	Terminal
10	23444		Field Assem.
11	48969	*	Wire Nut
12	160356	*	Terminal
13	48262A	+	Cord Cover Tube
14	46363338		Attach. Cord
15	12229JM	+	Cord Protector
16	14504	+	Ball Socket Insulator
17	49407	+	Washer
18	15865	*	Washer
19	49344	+*	Insulator
20	23445		Armature
21	49417AZ	+*	Screw
22	35380		Service Plug Assem.
23	45517	*	Wire Holder
24	12165		Gear Cover Assem.
25	21312724	*	Washer
26	168402		Brush Shaft & Insert - R.H.
27	168403		Brush Shaft & Insert - L.H.
28	14378	+*	Screw
29	14367	+	Cord Insulator
30	34312011	*	Clip - Early Model
31	12910		Cord Clamp - Late Model
32	49388AY	+	Ball Shaft - R.H.
33	35675BZ		Idler Gear - R.H. (Black)
34	35674		Idler Gear - L.H.
35	42273011		Gear Housing Comp.
36	38541002		Brush Gear
38	35583		Shaft & Nut - R.H.
39	35584	+	Shaft & Nut - L.H.
40	21312756	*	Washer
41	14199	+*	Nut
42	14287	+	Lock Washer
43	35589	+	Switch
44	12892	*	Screw - Machine
45	21388105	+*	Nut - Special
46	21312761	*	Washer
47	12892	*	Screw - Machine
48	19512AH		Switch
49	14360	+*	Eyelet
50	14377	+*	Switch Insulator
51	35676	+	Ball Mounting Bracket Assem.
52	12574	+	Lead Wire - By Foot
53	49429	+*	Screw
54	34207AG		Foot Pad
55	12891		Handle Control Lever Spring
56	49188	+*	Screw
57	12548	+	Carriage Bolt
58	49403	+	Furniture Guard Retainer
59	12738	+*	Screw
60	12236	+*	Washer
61	15673	*	Hex Nut
62	49571AY	+	Rivet
63	44099	+*	Screw
64	47779	+	M. H. Attach. Plate
65	35581	+	Nameplate
66	23469A	+	Furniture Guard - 5460, 5466, 5468
	23401A	+	Furniture Guard - 5130, 5131, 5137, 5350 (Wide)
67	23450B	+	Hood Assem.
68	19978BG	+	Ball Arm Retainer
69	49433	+*	Screw
70	14491	+	Snap Bushing
71	35644CC	+	Ball - 5460, 5466, 5468
	35605A	+	Ball Assem. - 5103, 5131, 5137, 5350
72	48294AW		Handle Bolt & Nut

ITEMS NOT ILLUSTRATED

	14503	+	Insulating Tube - 5460, 5466, 5468
	168505	+	Brush Shaft Bushing
	12622	*	Plastic Washer - Used with Bearing 168505

Polisher Accessories

Models 5020, 5130, 5131, 5137, 5200, 5240, 5350, 5450, 5460, 5466, 5468, 5476

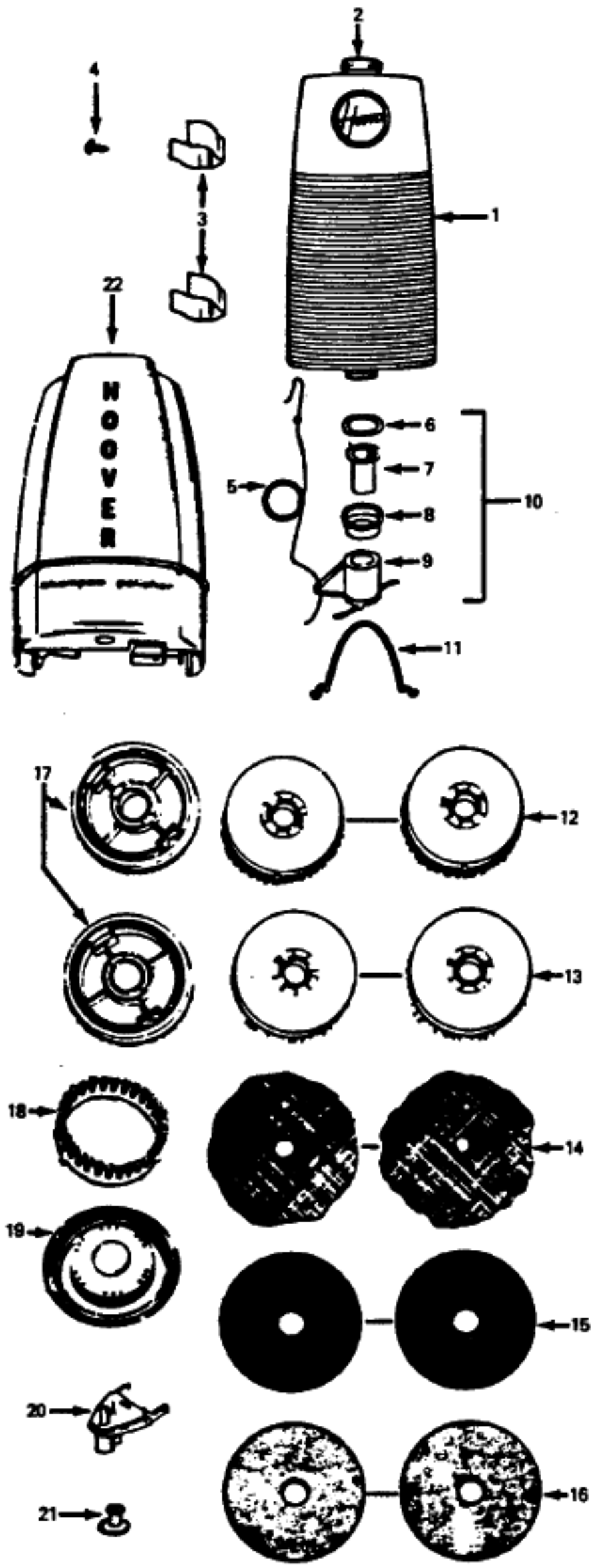

Ref.	Part No.		No. Description
1	14464BA	+	Liquid Dispenser Tank - 1-1/2 Qt.
	18891BZ	+	Liquid Dispenser Tank - 1 Qt..
2	14486JM	+	Tank Cap
3	49482JM	+	Clamp Spring Clip
4	160548	+*	Screw
5	35413	+	Pull Cord, Hook & Ring Assem.
6	49539	+*	Gasket
7	35412	+	Valve Body
8	49490	+	Cap
9	35415	+	Valve Sleeve & Hose Assem.
10	43516003	+	Valve Assem.
11	35576	+	Hose Guide
12	35354		Floor Polisher Brush - Models B
	35580	+	Waxing & Scrubbing Brushes - Models A
13	35613		Polishing Brush - Models A
	35354		Polishing Brush - Models B
14	13197		High Lustre Pads, Pair - Models A
	13198	+	High Lustre Pads, Pair - Models B
15	48432014		Felt Buffing Pads, Pair - Models A
	13194	+	Felt Polishing Pads, Pair - Models B
16	13195		C. & W. Pads, Pair - Models A
	13196	+	C. & W. Pads, Pair - Models B
17	15116		Rug Shampoo Brush & Body - Models A
18	35419	+	Rug Shampoo Brush - Models B
19	35418	+	Rug Shampoo Body - Models B
	35384	+	Rug Shampoo Assem. - Models B
20	15217HH	+	Foam Wax Dispenser - Models A
21	13131		Plastic Fastener - Models A
	13132	+	Plastic Fastener - Models B
22	35460BB	+	Detergent Tank - 5200, 5468, 5476
	35460G	+	Detergent Tank - 5460, 5466

ITEMS NOT ILLUSTRATED

35575	+	Can Clamp Lever Assem.
35656	+	Spring for 35575
23067	+	Rug Applicator - 5020, 5450
161084		Steel Wool Pads, Pair - Models A

Models A - 5130,5131, 5137,5200,5350, 5460, 5466,5468,5476
Models B - 5020, 5240, 5450