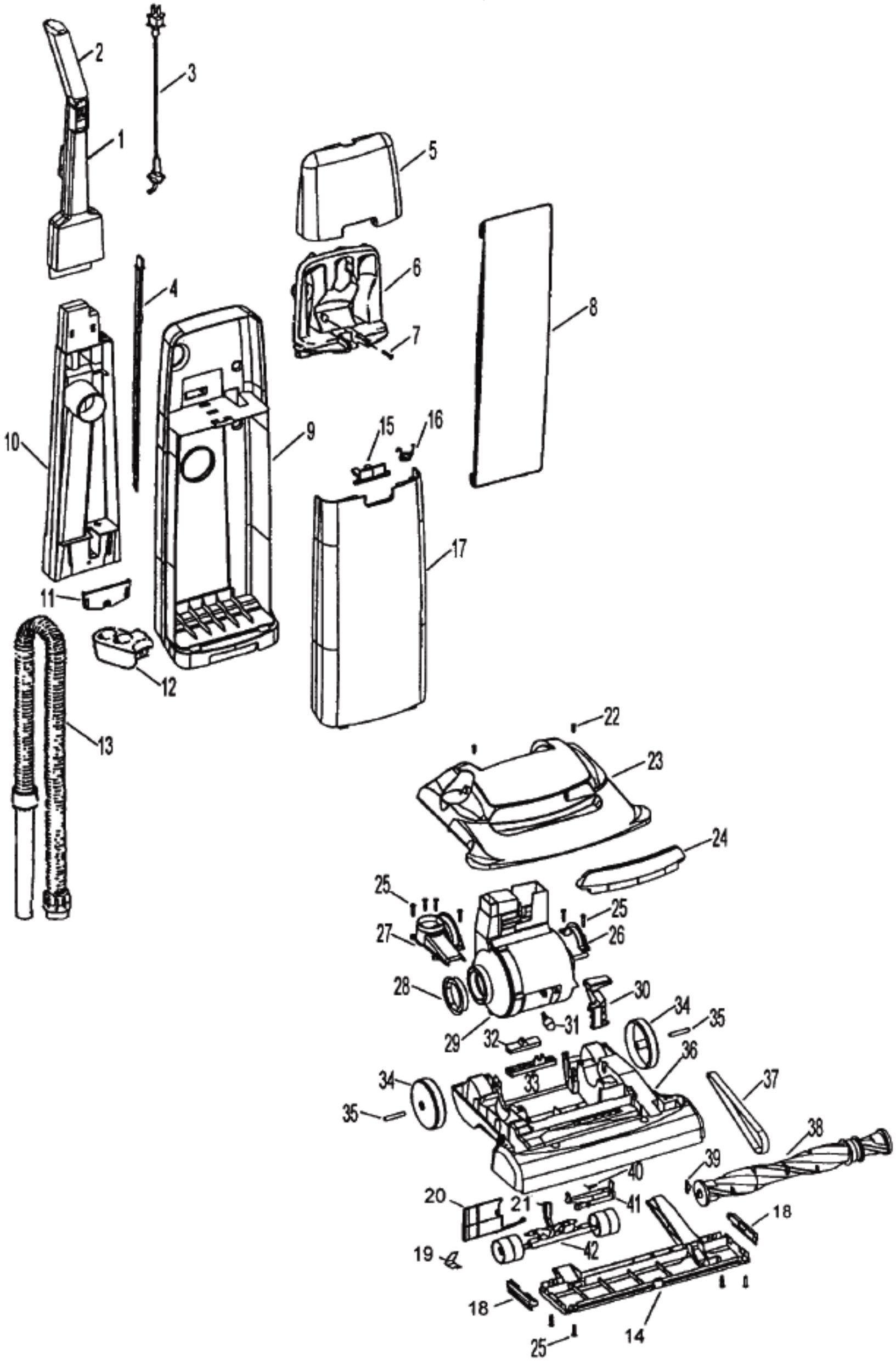
1
2
3
4
5
6
7
8
9
10
11
12
13
14
15
16
17
18
19
20
21
22
23
24
25
26
27
28
29
30
31
32
33
34
35
36
37
38
39
40
41
42

Ref. No.	Part No.	Description
1	48663209	Upper Handle Assembly
2	37911078	Handle Cap
3	46368005	Cord Assembly - 35 ft.
4	38458046	Switch Rod - Lower
5	N/A	Tool Door
6	36433133	Tool Holder
7	21447232	* Screw - Tool Holder
8	4010100Z	T/A Bag 3 pk. Microfiltration
	43667053	Cloth - Reusable Bag
9	37255021	Bag Housing
10.	39464025	Lower Handle
11	36425081	Bag Housing Bracket
12	36433113	Lower Hose Support
13	43434101	Hose Assembly (For Hose parts see items not illustrated)
14	37245035	Bottom Plate
15	36151013	Bag Door Latch
16	38355008	Spring
17	37254137	Bag Hsg. Door
18	39511006	Litter Picker
19	34572002	Cam Actuator Spring
20	38718005	Valve Gate
21	38452089	Lever
22	21447218	* Screw - Hood (4)
23	**Note: All Hoods include item 24**	
	42252A62	Hood - Models before 10/01
	42252B36	Hood - Models after 10/01
24	39383108	Lens - Models before 10/01
	39383112	Panel - Models after 10/01
25	21447217	* Screw (10)
26	36131090	Motor Retainer Cap - LH
27	38656033	Duct Cover
28	38784016	Seal
29	43576204	Motor w/ headlight- Models before 10/01
	43576215	Motor w/o headlight- Models after 10/01
30	38458053	Handle Release Lever
31	27313101	Bulb - Models before 10/01
32	38567014	Indicator Knob
33	38567027	Cam Actuator
34	38522011	Rear Wheel (2)
35	31531008	Rear Wheel Shaft (2)
36	37241158	Main Body (Inc. items 34, 35)
37	38528027	+ Agitator Belt
	38528040	Agitator Belt
38	48414061	Agitator Assembly
39	13261AY	* Rug Nozzle Rib Shoe
40	38351012	Spring
41	38563013	Nozzle Height Adj. Cam
42	43248058	Front Wheel Assembly
43	38452089	+ Lever - Use 43248052 Wheel Assembly

Items not Illustrated

40201085	Nut and Bolt Assem. (Handle)
39442043	Cord Wrap (Upper Handle)

Hose Parts

36116013	Hose Connector Collar (2)
38638064	Hose Connector
32286025	Hose End - Long

Tools

38634078	Extension Tube
38614036	Furniture Nozzle
38617026	Crevice Tool
43414146	Dusting Brush

Packaging

56511A58	Owner Manual
58185206	Carton
58366099	Hard Bag Support
58369067	+ Cleaner Support