This Owner's Manual is provided and hosted by Appliance Factory Parts.

Appliance Factory Parts
Experts in BBQ, Humidifier, & Appliance Parts
1-800-955-7075

Black & Decker VN2010 Owner's Manual

Shop genuine replacement parts for Black & Decker VN2010

Find Your Black & Decker Vacuum Cleaner Parts - Select From 339 Models

-------- Manual continues below --------

BLACK & DECKER®

www.blackanddecker.com

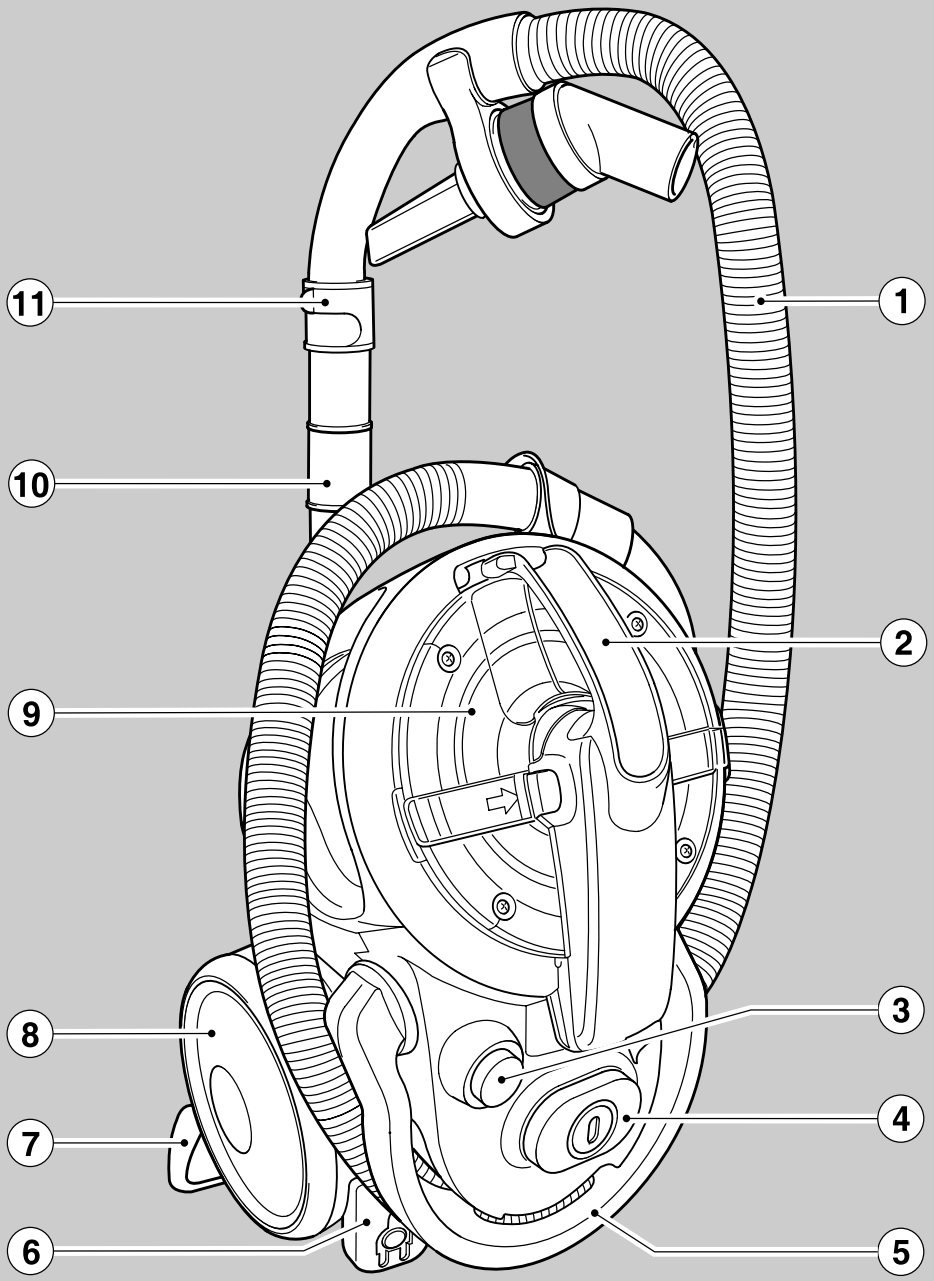

UK

Ireland

Australia

New Zealand

Downloaded from www.Manualslib.com manuals search engine

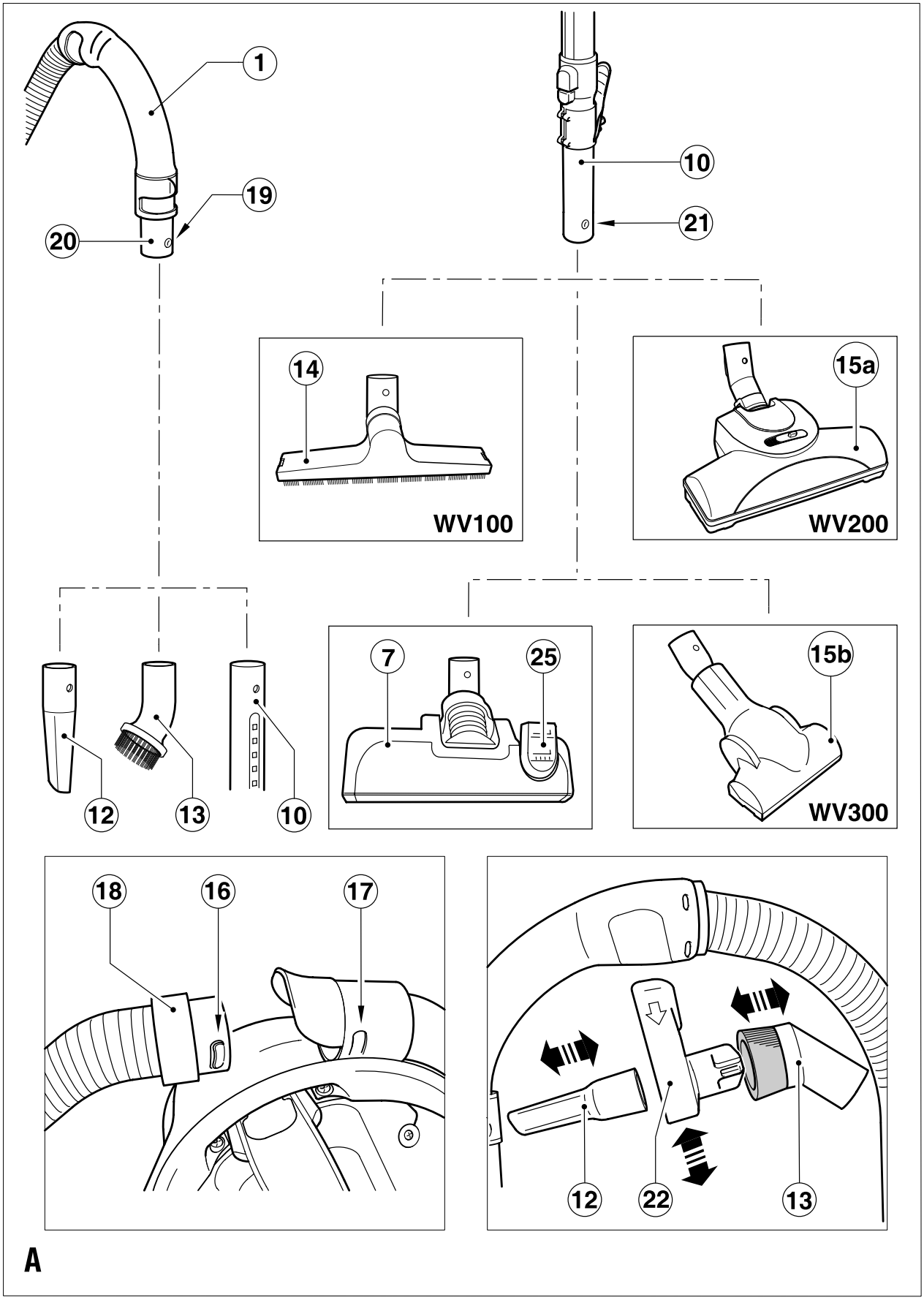

Downloaded from www.Manualslib.com manuals search engine

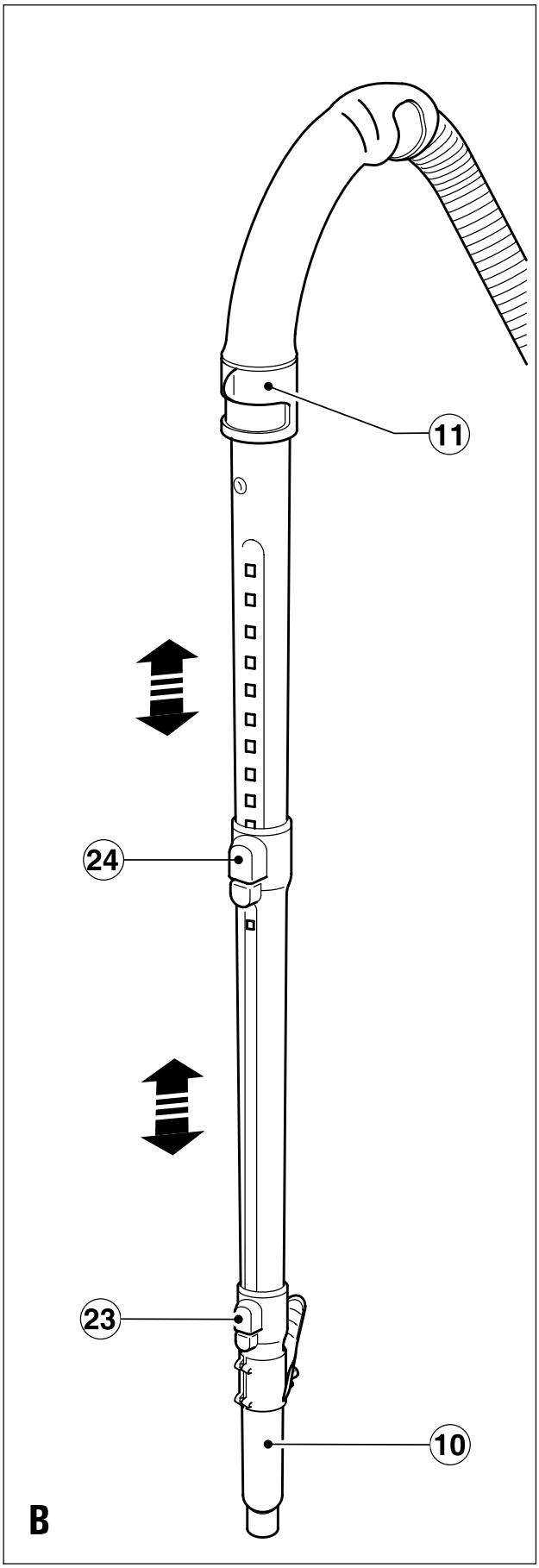

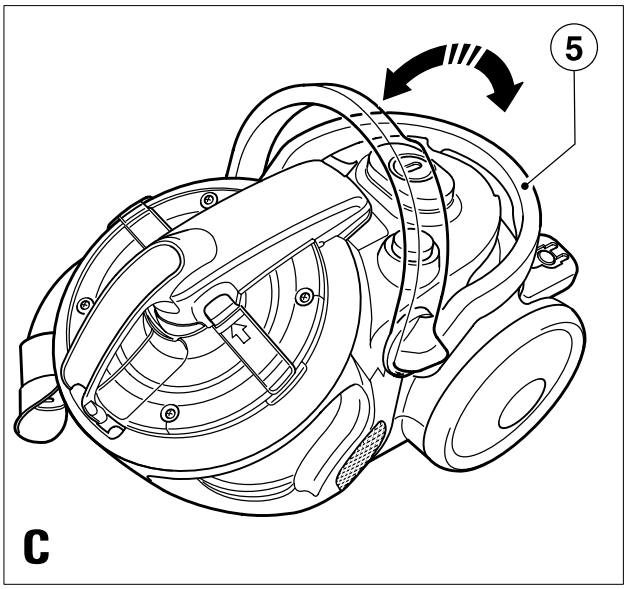

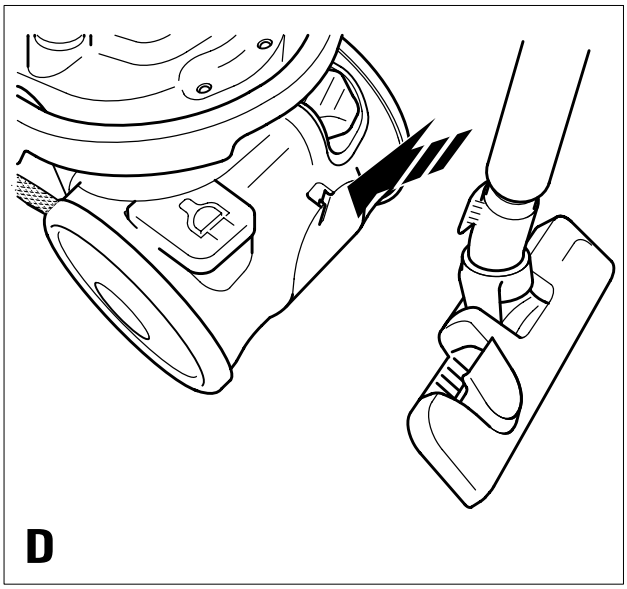

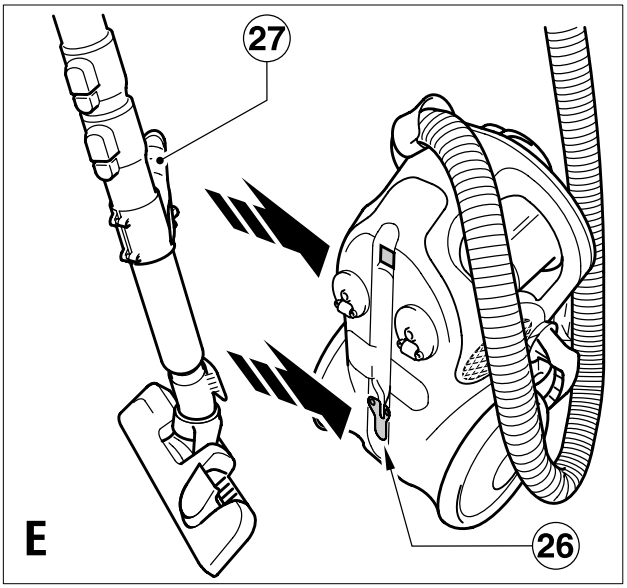

Downloaded from www.Manualslib.com manuals search engine

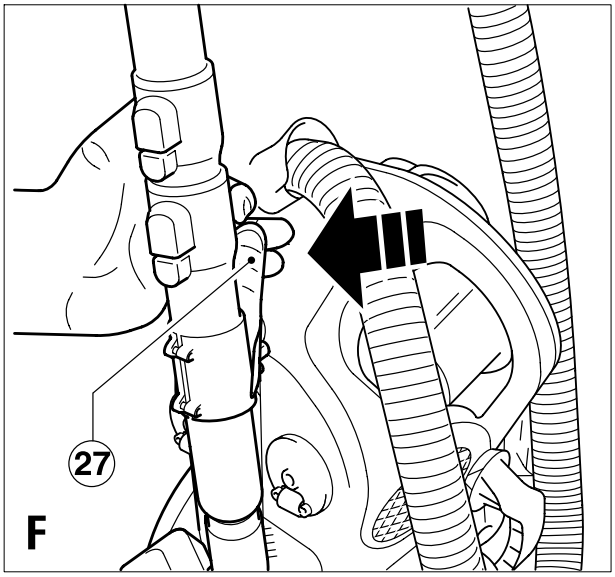

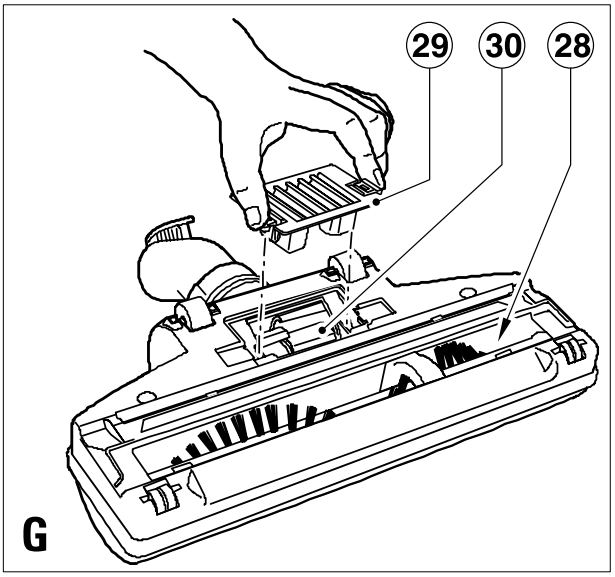

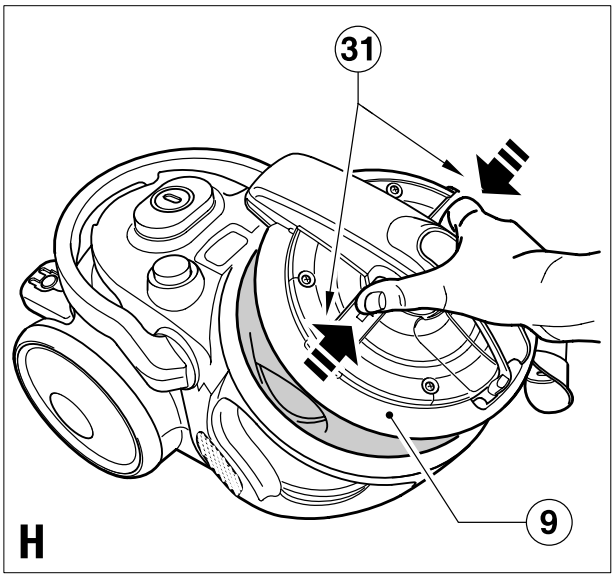

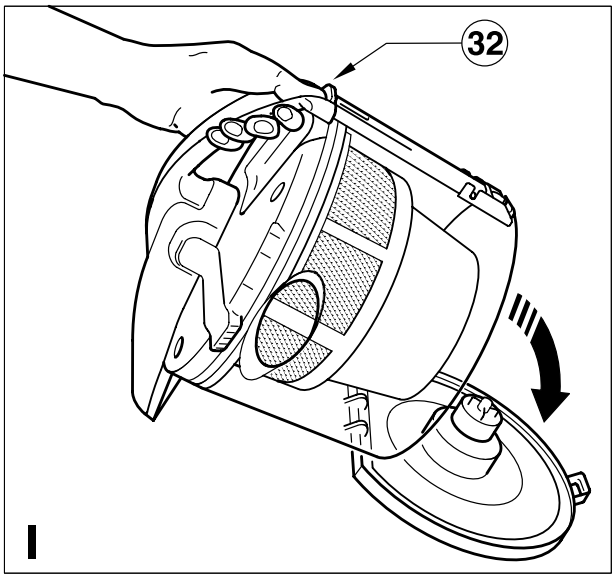

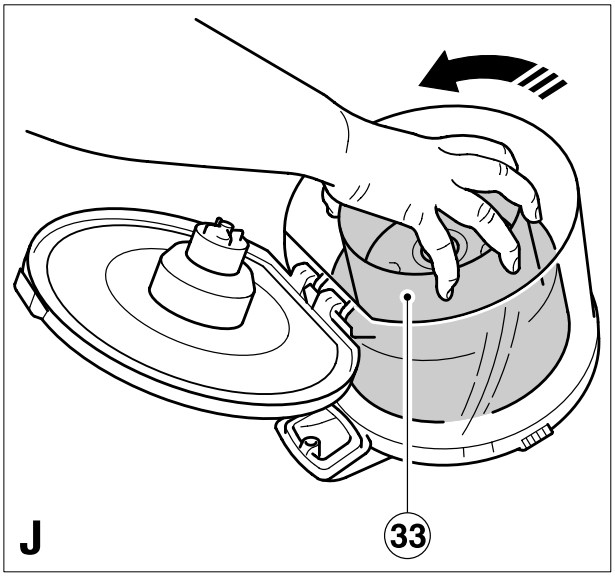

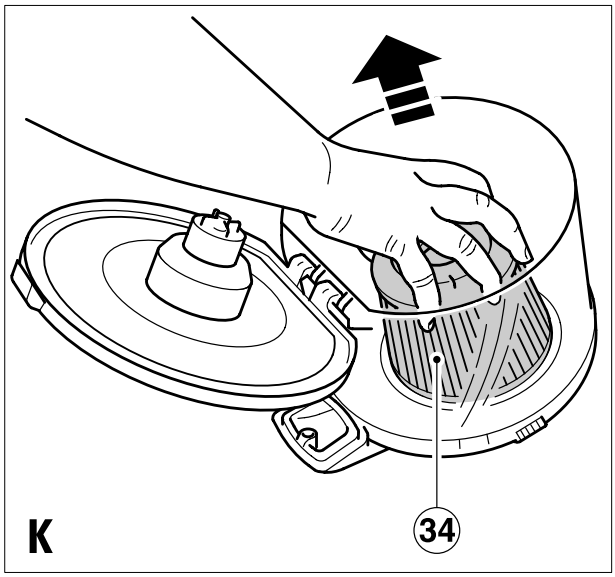

Downloaded from www.Manualslib.com manuals search engine

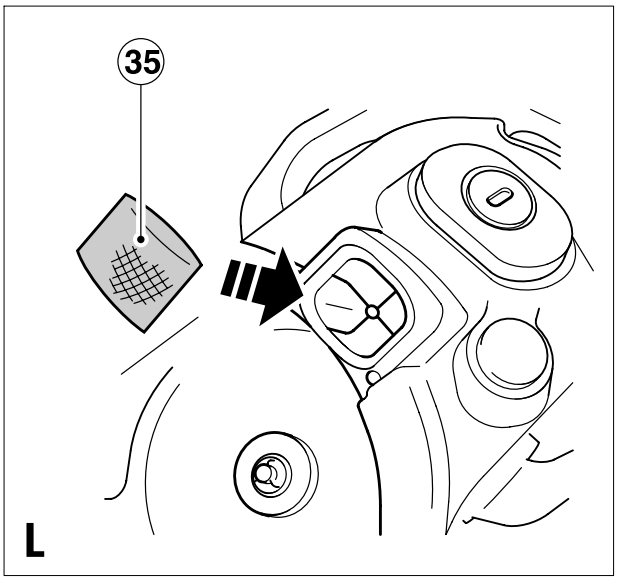

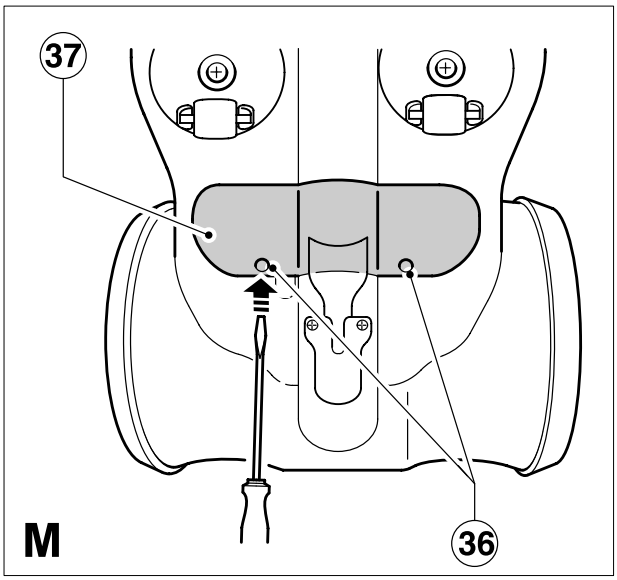

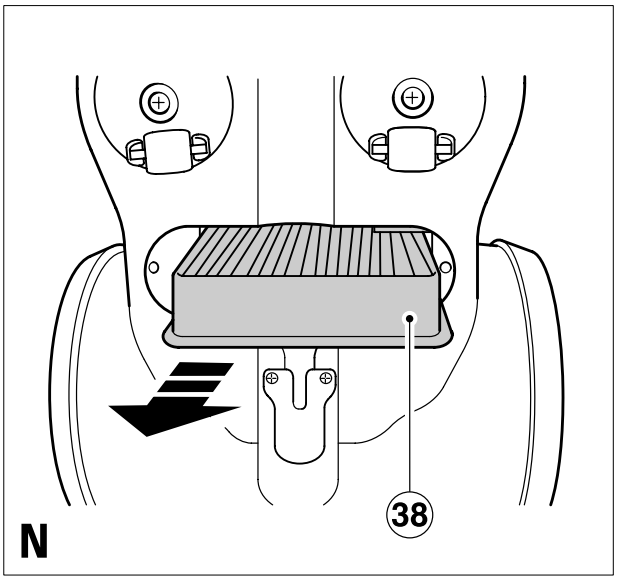

Downloaded from www.Manualslib.com manuals search engine

Intended use

Your Black & Decker vacuum cleaner has been designed to vacuum dry substances. This product is intended for household use only.

Safety instructions

Warning! When using mains-powered appliances, basic safety precautions, including the following, should always be followed to reduce the risk of fire, electric shock, personal injury and material damage.

- Read all of this manual carefully before using the appliance.
- The intended use is described in this manual. The use of any accessory or attachment or the performance of any operation with this appliance other than those recommended in this instruction manual may present a risk of personal injury.
- Retain this manual for future reference.

Using your appliance

- Make sure that the appliance is switched off before connecting to or disconnecting from the power supply.
- Always take care when using the appliance.
- Do not use the appliance outdoors.
- Never pull the power supply cord to disconnect the plug from the socket. Keep the power supply cord away from heat, oil and sharp edges.
- If the power supply cord is damaged during use, disconnect the appliance from the power supply immediately. Do not touch the power supply cord before disconnecting from the power supply.
- Disconnect the appliance from the power supply when not in use, before fitting or removing parts and before cleaning.

Safety of others

- Do not allow children or any person unfamiliar with these instructions to use the appliance.
- Do not allow children or animals to come near the work area or to touch the appliance or power supply cord. Close supervision is necessary when the appliance is used near children.

After use

- Switch off and remove the plug from the socket before leaving the appliance unattended and before changing, cleaning or inspecting any parts of the appliance.
- When not in use, the appliance should be stored in a dry place. Children should not have access to stored appliances.

Inspection and repairs

- Before use, check the appliance for damaged or defective parts. Check for breakage of parts, damage to switches and any other conditions that may affect its operation.
- Do not use the appliance if any part is damaged or defective.
- Have any damaged or defective parts repaired or replaced by an authorised repair agent.
- Before use, check the power supply cord for signs of damage, ageing and wear.
- Do not use the appliance if the power supply cord or mains plug is damaged or defective.
- If the power supply cord or mains plug is damaged or defective it must be repaired by an authorised repair agent in order to avoid a hazard. Do not cut the power supply cord and do not attempt to repair it yourself.
- Never attempt to remove or replace any parts other than those specified in this manual.

Electrical safety

This tool is double insulated; therefore no earth wire is required. Always check that the power supply corresponds to the voltage on the rating plate.

Additional safety instructions for vacuum cleaners

- Before use, always make sure that the filter is correctly seated.
- Do not carry the appliance at the container handle.
- Do not use the appliance to pick up liquids.
- Do not use the appliance to pick up any materials that could catch fire.
- Do not use the appliance near water. Do not immerse the appliance in water.
- Keep the motor draught away from your eyes and face.
- Keep children and animals at a safe distance when using this appliance.
- Always work from bottom up when using the appliance on stairs, and keep the appliance at least a stair below your working position.
- Do not use the appliance without the suction head or another suitable accessory mounted to the tube.
- Keep your hair, clothing and gloves away from moving parts. Do not reach into the rotating brush. Keep the rotating brush away from the power supply cord.
- Do not use damaged accessories.
- Use only Black & Decker accessories.

Downloaded from www.Manualslib.com manuals search engine

Features

This appliance includes some or all of the following features.

1. Hose
2. Container handle
3. Filter cleaning switch (not VN1800N)
4. On/off switch
5. Handle
6. Cord rewind button
7. Suction head
8. Wheels
9. Container
10. Extension tube
11. Airflow control switch

In addition, this appliance is supplied with some or all of the following accessories (fig. A):

12. Crevice tool
13. Brush tool
14. Parquet floor head (VN2010 / VN2200 / VN2400)

15a. Large turbo brush (VN1800T / VN2200 / VN2205 / VN2400)

15b. Mini turbo brush (VN2000C)

The parquet floor head is not included with all models. This accessory is available from your Black & Decker dealer / service centre (cat. no. WV100).

The large turbo brush is not included with all models. This accessory is available from your Black & Decker dealer / service centre (Cat. No. WV200).

The mini turbo brush is not included with all models. This accessory is available from your Black & Decker dealer / service centre (Cat. No. WV300).

Assembly

Connecting the hose (fig. A)

- Insert the hose connector (16) into the inlet (17) of the appliance.
- Line up the hose connector tabs with the slots in the inlet.
- Slide the hose further until the release buttons (18) (2 positions) click into place.
- To disconnect the hose, press the release buttons (18) (2 positions) and pull out the hose.

Mounting the extension tube (fig. A)

- Press the lock button (19) and slide the hose nozzle (20) into the tube (10) until it clicks into place.
- To remove the tube (10), press the lock button and pull the hose nozzle (20) out of the tube.

Mounting the suction head (fig. A)

The suction head (7) allows for vacuuming on carpet and hard surfaces (e.g. laminate and tiles).

- Press the lock button (21) and slide the tube (10) into the head (7) until it clicks into place.
- To remove the head (7), press the lock button (21) and pull the tube (10) out of the head (7).

VN2010 / VN2200 / VN2400 - Mounting the parquet floor head (fig. A)

The parquet floor head (14) allows for vacuuming on wooden and polished surfaces.

- Press the lock button (21) and slide the tube (10) into the head (14) until it clicks into place.
- To remove the head (14), press the lock button (21) and pull the tube (10) out of the head.

VN1800T / VN2200 / VN2205 / VN2400 - Mounting the large turbo brush (fig. A)

The large turbo brush (15a) allows for vacuuming on cut pile carpeting.

The brush is particularly useful for picking up hair, threads, etc., as well as for refreshing trodden-down carpet pile.

- Press the lock button (21) and slide the tube (10) into the head (15a) until it clicks into place.
- To remove the head (15a), press the lock (21) button and pull the tube (10) out of the head.

VN2000C - Mounting the mini turbo brush (fig. A)

The mini turbo brush (15b) allows for vacuuming on cut pile carpeting and is especially ideal for stair cleaning.

The brush is particularly useful for picking up hair, threads, etc., as well as for refreshing trodden-down carpet pile.

- Press the lock button (21) and slide the tube (10) into the head (15b) until it clicks into place.
- To remove the head (15b), press the lock (21) button and pull the tube (10) out of the head.

Mounting accessories (fig. A)

The crevice tool (12) allows for vacuuming in narrow and hard to-reach places. The brush tool (13) allows for vacuuming on furniture, blinds, curtains, windows and stairs. The accessories can be mounted on both the hose (1) and the tube (10).

- Press the lock button (19 or 21) and slide the accessory onto the hose nozzle (20) or the tube (10).
- To remove an accessory, press the lock button (19 or 21) and pull the accessory off.

When not in use, the accessories can be stored on the accessory holder (22). The accessory holder is stored on the hose nozzle. This is clipped into place, to remove pull way from the hose nozzle. The tools are stored as shown in fig. A.

Downloaded from www.Manualslib.com manuals search engine

Use

Unwinding and rewinding the cord

The cord rewind button (6) can be operated by hand or foot.

- Before use, pull a sufficient length of cord from the back of the appliance.
- After use, press the cord rewind button (6) to store the cord back into place. Manually guide the cord to ensure it does not swing back. Ensure the plug is correctly located.

Adjusting the length of the tube (fig. B)

The extension tube (10) is made up of three pieces.

- To extend the middle / lower two pieces, press the lower adjustment button (23) and slide out the tube fully until it clicks into place.
- The upper two pieces can be adjusted in 11 steps. Press the upper adjustment button knob (24) and slide the tube to the desired length. Make sure that the tube clicks into place.

Adjusting the suction head (fig. A)

- For vacuuming on carpets, switch the floor surface selector (25) into the up position.
- For vacuuming on laminates, tiles, etc., switch the floor surface selector (25) into the down position.

Switching on and off

- The on/off switch (4) can be operated by hand or foot.
- To switch the appliance on, press the on/off switch (4).
- To switch the appliance off, press the on/off switch (4) again.

Adjusting the airflow (fig. B)

- Rotate the airflow control switch (11) to adjust the airflow as desired. Max and min positions are shown.

Vacuuming

- When operating the appliance, make sure that the hose is not trapped, twisted or blocked
- In case of overheating, a cut-out will operate and the appliance will automatically stop.
- If the appliance stops operating, unplug the appliance and allow it to cool for 2-3 hours.

Hints for optimum use

- When working in confined spaces, temporarily remove the accessory holder from the tube to improve your scope.
- When vacuuming stairs, always start at the bottom and work your way up. Position the appliance on the floor and do the stairs until halfway. Then carry the appliance to a stable position which is at least one stair below your working position, and do the top half of the stairs.

VN2200 - Using the turbo brush (fig. A)

- Take care that the speed control switch is at the highest setting. Move the slider on top of the brush as necessary to optimise the suction force.
- Move the brush steadily back and forth. Do not keep the brush on the same place for a long time, as this might damage the surface.

Carrying the appliance (fig. C)

During use the appliance can be carried using the handle (5).

- Tilt the handle into position as shown.

Temporarily parking the suction head (fig. D)

- Use the park position for a temporary parking of the suction head.

Storing the appliance (fig. E & F)

Warning! Warning! When storing the appliance, switch the appliance off and unplug it.

- Make sure that the cord is fully rewound.
- Place the appliance in an upright position.
- Wrap the hose around the appliance.
- Insert the suction head hook (26) into the recess in the appliance.
- Push the tube until the locking device (27) inserts into the corresponding recess in the appliance as shown. The locking device (27) engages automatically.
- Store the appliance in a dry location. The appliance can be carried by the container handle (2).
- To take the tube from the appliance for use, press the lever on the locking device (27) on the back of the tube and pull the tube away from the unit and lift the tube and head out of the parking slots.

Maintenance

Your Black & Decker tool has been designed to operate over a long period of time with a minimum of maintenance. Continuous satisfactory operation depends upon proper tool care and regular cleaning.

Cleaning the filter (not VN1800N)

The appliance is fitted with a filter cleaning feature.

- After every use switch the appliance off but don't unplug from the mains.
- Ensure the container is securely in place.
- Press the filter cleaning switch (3) and the filter cleaning cycle will run for 10 seconds, after which it will automatically switch off. During the 10 seconds, the auto cleaning system cleans the filter.
- The plug can now be removed from the socket.

This will ensure that the next time the appliance is used the performance is at its optimum.

Downloaded from www.Manualslib.com manuals search engine

Note: The appliance is designed to prevent vacuuming during the filter cleaning cycle. If the vacuum is switched on during the filter cleaning cycle, the filter cleaning cycle will stop.

Warning! Before performing any maintenance or cleaning on the appliance, unplug the appliance.

- Regularly clean the ventilation slots in your appliance using a soft brush or dry cloth.
- Regularly clean the motor housing using a damp cloth. Do not use any abrasive or solvent-based cleaner.

VN1800T / VN2200 / VN2205 / VN2400 - Clearing the large turbo brush (fig. G)

- Remove any hair or threads collected onto the brush (28).

Use a pair of scissors if necessary.

- Remove the cover (29) to remove any foreign objects blocking the air turbine (30). Re-fit the cover.

Emptying the container (fig. H & I)

The container (9) must be emptied when the dirt fills to the maximum mark indicated on the bin.

- Remove the container (9) from the appliance by pressing the two release buttons (31) and lifting the container out of the appliance.
- Press the lower door latch (32) to release the dirt.
- Empty the container as necessary.
- Clean the filter as described below (not VN1800N).
- Close the lower door and make sure that it clicks into place.
- Re-fit the container (9) into the appliance, make sure that the release buttons (31) click into place.
- Press the filter cleaning switch (3) and the filter cleaning cycle will run for 10 seconds, after which it will automatically switch off. This will ensure that the next time the appliance is used, the performance will be at it's optimum.

Cleaning

Warning! Before cleaning and maintenance, switch the appliance off and unplug it.

- From time to time wipe the appliance with a damp cloth. Do not use any abrasive or solvent-based cleaner. Do not immerse the appliance in water.

Cleaning the container filters (fig. H - K)

The container filters prevent dust and dirt from entering the motor housing. The filters are re-usable and should be cleaned periodically (VN1800N - clean after every bowl empty).

- Remove the container from the appliance (fig. H).
- Press the lower door latch (32) to release the lower door (fig. I).
- Remove the pre-filter (33) from the container (9) (fig. J) by rotating anti clockwise.
- Pull the filter (34) off the filter holder (fig. K).

Warning! Do not brush or use compressed air to clean the filter.

- Depending on its condition, rinse the outside of the filter with water. Allow the filter to dry for 24 hours before reinserting it.

Warning! Do not wash the inside of the filter.

- Replace the filter.
- Re-fit the pre-filter.
- Close the lower door.
- Re-insert the container into the appliance.

Cleaning the motor filter (fig. H & L)

The motor filter (35) prevents particles and larger objects from entering the motor housing when the container is removed.

The filter (35) is re-usable and should be cleaned regularly.

- Remove the container from the appliance (fig. H).
- Take the filter (35) out (fig. L).
- Brush any loose dust off the filter.
- Replace the filter (35).
- Re-insert the container into the appliance.

Replacing the filters

If the container filter (34) is damaged or fails to operate properly, it must be replaced. Replacement filters are available from your Black & Decker dealer (cat. no. VLF50).

Replacing the container filter

- Proceed as described above to replace the filter (34).

Replacing the outlet filter (fig. M & N)

The appliance is fitted with a lifetime filter but if it is required to be replaced, replace it as follows:

- Remove the two screws (36)
- Remove the cover (37) by using a tool to lift the cover up.
- Remove the old filter (38) by pulling it out.
- Insert the new filter as shown.
- Refit the cover with the two screws (36).

Mains plug replacement (U.K. & Ireland only)

If a new mains plug needs to be fitted:

- Safely dispose of the old plug.
- Connect the brown lead to the live terminal in the new plug.
- Connect the blue lead to the neutral terminal.

Warning! No connection is to be made to the earth terminal. Follow the fitting instructions supplied with good quality plugs. Recommended fuse: 13A.

Downloaded from www.Manualslib.com manuals search engine

Protecting the environment

Should you find one day that your tool needs replacement, or if it is of no further use to you, think of the protection of the environment. Black & Decker repair agents will accept old Black & Decker tools and ensure that they are disposed of in an environmentally safe way.

Separate collection of used products and packaging allows materials to be recycled and used again. Re-use of recycled materials helps prevent environmental pollution and reduces the demand for raw materials.

Local regulations may provide for separate collection of electrical products from the household, at municipal waste sites or by the retailer when you purchase a new product.

Black & Decker provides a facility for the collection and recycling of Black & Decker products once they have reached the end of their working life. To take advantage of this service please return your product to any authorised repair agent who will collect them on our behalf.

You can check the location of your nearest authorised repair agent by contacting your local Black & Decker office at the address indicated in this manual. Alternatively, a list of authorised Black & Decker repair agents and full details of our after-sales service and contacts are available on the Internet at: **www.2helpU.com.**

Technical data

		VN1800N	VN1800 VN1800T	VN2000 VN2000C VN2010
Voltage	Vac	230	230	230
(Australia & New Zealand)	Vac	240		
Power input	W	1800	1800	2000
Cable length	m	5	6	7
Container size	l	2.5	2.5	2.5
Weight	kg	8.8	9.1	9.6

		VN2200 VN2205	VN2400
Voltage	Vac	230	230
(Australia & New Zealand)	Vac	240	
Power input	W	2200	2400
Cable length	m	8	8
Container size	l	2.5	2.5
Weight	kg	9.7	9.8

EC declaration of conformity

VN1800/VN1800T/VN1800N/VN2000/VN2000C/VN2010/
VN2200/VN2205/VN2400

Black & Decker declares that these products conform to:
89/336/EEC, 2006/95/EC, EN 55014, EN 61000, EN 60335, EN 61000-3-11

Level of sound pressure, measured according to EN 60704-1: = 73 dB(A)

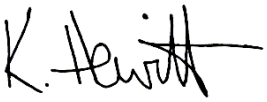

Kevin Hewitt
Director of Consumer Engineering
Spennymoor, County Durham
DL16 6JG,
United Kingdom
01-04-2007

Guarantee

Black & Decker is confident of the quality of its products and offers an outstanding guarantee. This guarantee statement is in addition to and in no way prejudices your statutory rights. The guarantee is valid within the territories of the Member States of the European Union and the European Free Trade Area.

If a Black & Decker product becomes defective due to faulty materials, workmanship or lack of conformity, within 24 months from the date of purchase, Black & Decker guarantees to replace defective parts, repair products subjected to fair wear and tear or replace such products to make sure of the minimum inconvenience to the customer unless:

- The product has been used for trade, professional or hire purposes.
- The product has been subjected to misuse or neglect.
- The product has sustained damage through foreign objects, substances or accidents.
- Repairs have been attempted by persons other than authorised repair agents or Black & Decker service staff.

To claim on the guarantee, you will need to submit proof of purchase to the seller or an authorised repair agent. You can check the location of your nearest authorised repair agent by contacting your local Black & Decker office at the address indicated in this manual. Alternatively, a list of authorised Black & Decker repair agents and full details of our after-sales service and contacts are available on the Internet at:

www.2helpU.com

Please visit our website **www.blackanddecker.co.uk** to register your new Black & Decker product and to be kept up to date on new products and special offers. Further information on the Black & Decker brand and our range of products is available at **www.blackanddecker.co.uk**.

Downloaded from www.Manualslib.com manuals search engine

BLACK & DECKER	VN1800 - VN1800T - VN2000 - VN2000C - VN2010 - VN2200 - VN2205	TYP. 1

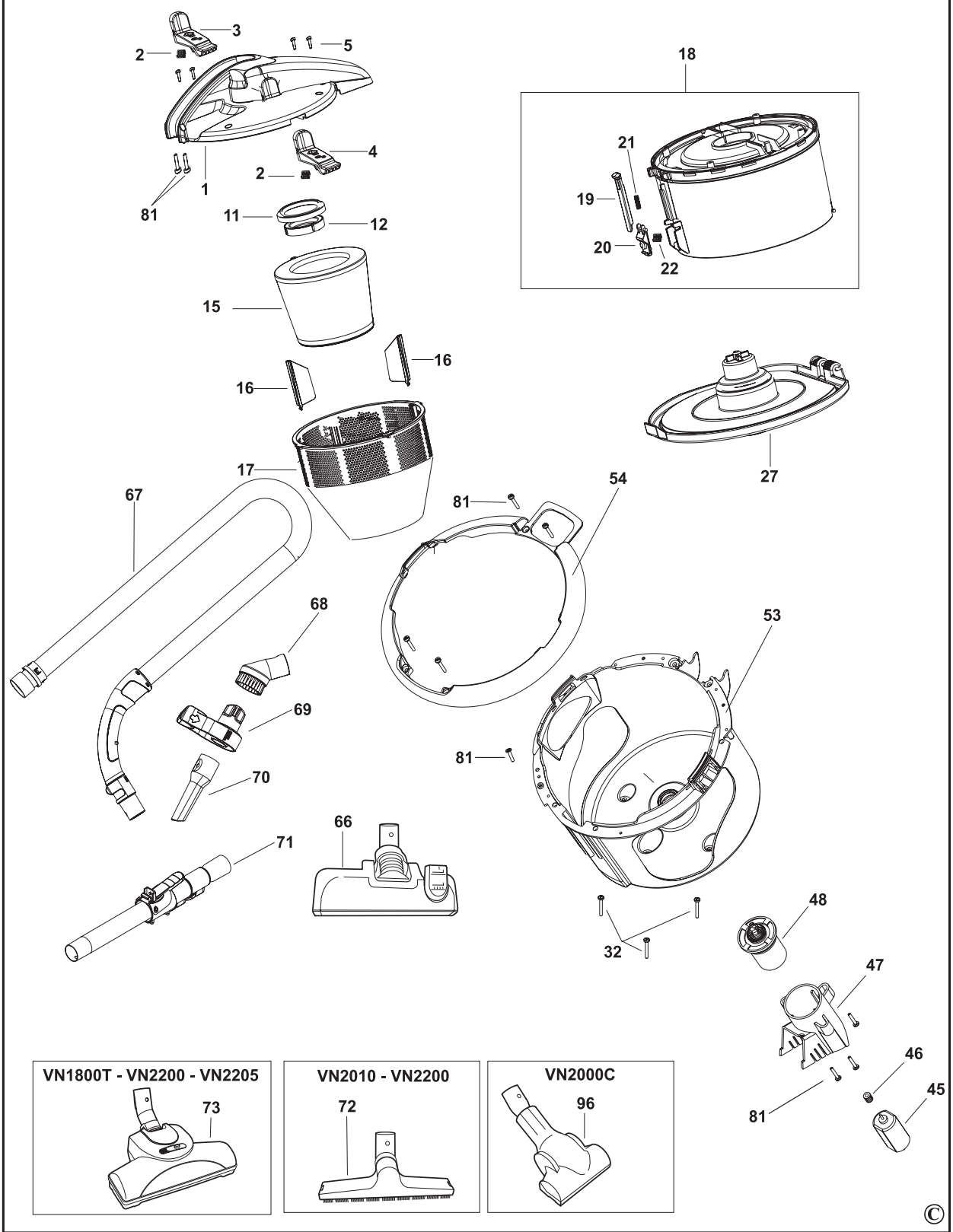

E14843	www.2helpU.com	17 - 04 - 07

Downloaded from www.Manualslib.com manuals search engine

BLACK & DECKER	VN1800 - VN1800T - VN2000 - VN2000C - VN2010 - VN2200 - VN2205	TYP. 1

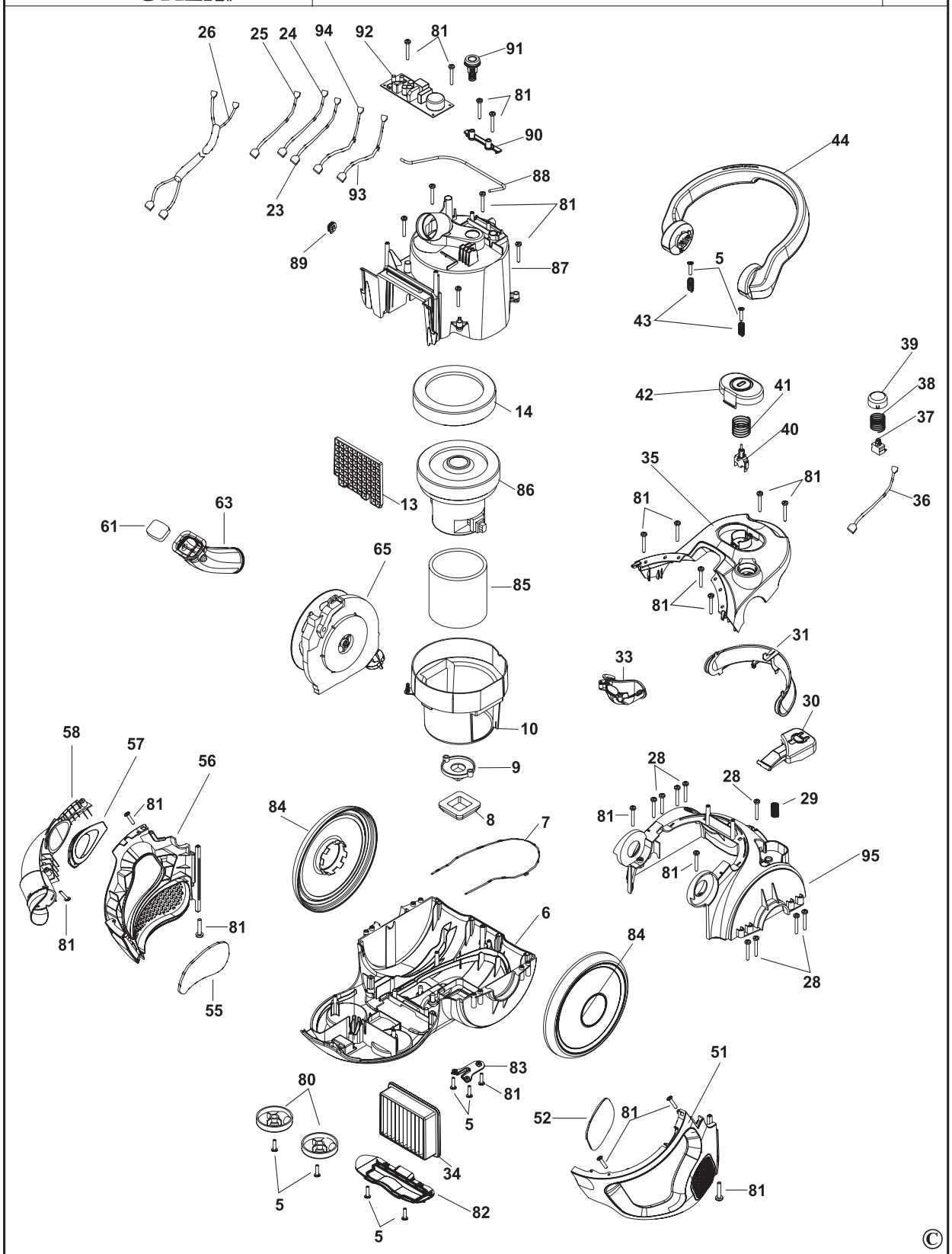

E14844	www.2helpU.com	17 - 04 - 07

Downloaded from www.Manualslib.com manuals search engine

Downloaded from www.Manualslib.com manuals search engine

Downloaded from www.Manualslib.com manuals search engine

Downloaded from www.Manualslib.com manuals search engine

Australia

Black & Decker (Australia) Pty. Ltd.	Tel. 03-8720 5100
20 Fletcher Road, Mooroolbark,	Fax 03-9727 5940
Victoria, 3138	

New Zealand

Black & Decker	Tel. +64 9 259 1133
5 Te Apunga Place	Fax +64 9 259 1122
Mt Wellington	
Auckland 1060	

United Kingdom

Black & Decker	Tel. 01753 511234
210 Bath Road	Fax 01753 551155
Slough, Berkshire SL1 3YD	Helpline 01753 574277

Downloaded from www.Manualslib.com manuals search engine