This Owner's Manual is provided and hosted by Appliance Factory Parts.

Appliance Factory Parts
Experts in BBQ, Humidifier, & Appliance Parts
1-800-955-7075

FISHER PRICE B2077 Owner's Manual

Shop genuine replacement parts for FISHER PRICE B2077

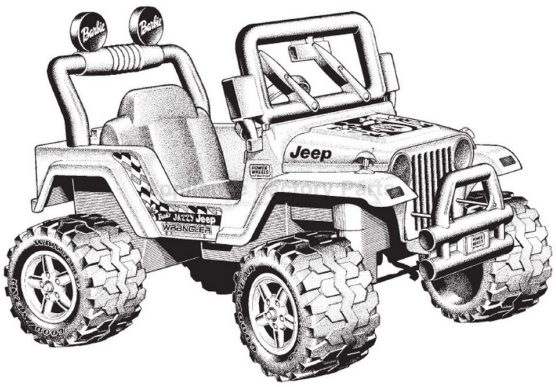

Find Your FISHER PRICE Ride On Parts - Select From 999 Models

-------- Manual continues below --------

Barbie™ JAZZY Jeep® WRANGLER

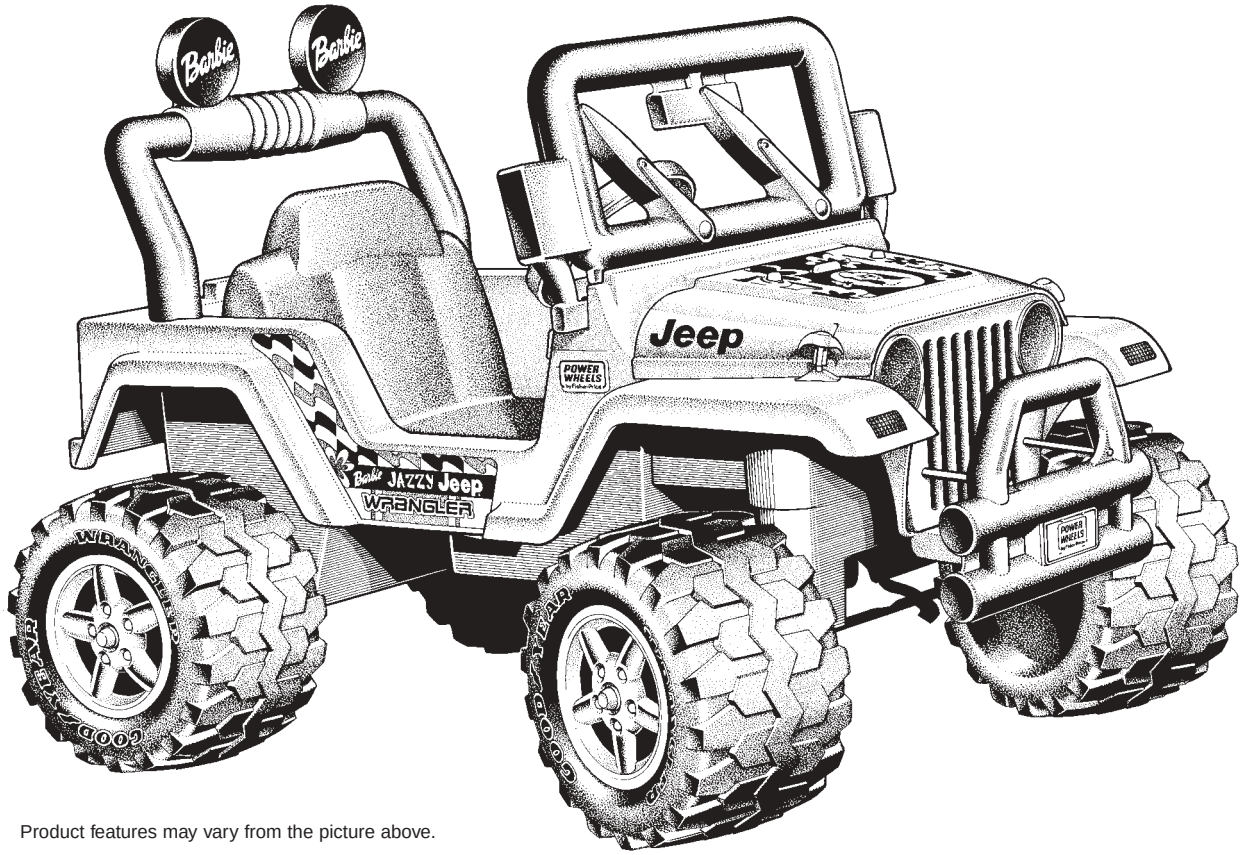

Product features may vary from the picture above.

Please read this manual and save it with your original sales receipt.

Tools needed for assembly: Phillips Screwdriver, Hammer and Safety Scissors (all not included).

Use only with a Power Wheels® 6 Volt Rechargeable Battery with A-style Connector and Built-in Thermal Fuse and a Power Wheels® Super 6™ Volt Charger (both included).

JEEP and the Jeep grille design are registered trademarks of DaimlerChrysler Corporation and are used used under license. ©DaimlerChrysler Corporation. Goodyear (and winged foot design) and Wrangler (for tires) are trademarks of the Goodyear Tire & Rubber Company, used with permission.

www.powerwheels.com

POWER WHEELS by Fisher-Price®

Owner's Manual
with Assembly Instructions

For Model B2077

Table of Contents

A Important Information 2
B Warnings and Cautions 3
C Parts 4
D Parts Diagram 7
E Battery Charging 8
F Assembly 10
G Label Decoration 17
H Battery Installation 19
I Battery Care and Disposal 20
J Caring For Your Vehicle 20
K Rules For Safe Driving 21
L How to Operate Your Vehicle 22
M Statement of Limited Warranty 23
N Problems and Solutions Guide 24
O Authorized Service Centers 27

A Important Information

- Your new vehicle requires adult assembly. Please set aside at least 60 minutes for assembly.
- You must charge your battery for 18 - 30 hours **before you use your vehicle for the first time**. We recommend that you start charging your battery before beginning assembly. Please see Battery Charging beginning on page 8 for detailed instructions.
- Read this manual carefully for important safety information and operating instructions before using your vehicle. Keep this manual for future reference as it contains important information.
- This vehicle is designed for use on: grass, asphalt and other hard surfaces; on generally level terrain; and by children 2 - 6 years of age.
- Make sure children know and follow these rules for safe driving and riding:
  - always sit on the seat.
  - always wear shoes.
  - only 1 (one) rider at a time.
- Use this vehicle **ONLY** outdoors. Most interior flooring can be damaged by riding this vehicle indoors. Fisher-Price® will not be responsible for damage to the floor if the vehicle is used indoors.
- To prevent damaging the motors and gears, teach your child to stop the vehicle before switching direction. Do not tow anything behind the vehicle or overload it. Do not exceed the maximum weight capacity of 65 lbs (29.5 kg).
- If you have any questions about your Power Wheels® vehicle, please call our toll-free service lines at **1-800-348-0751** from 8 AM to 6 PM (EST) Monday through Friday. Trained customer service representatives are available to take your call in English or French. Habla Español? Si usted tiene alguna pregunta ó necesita asistencia llame gratis **1-800-348-0755** para los Estados Unidos. Tenemos representantes que hablan español para atender su llamada.
- For your convenience, Power Wheels® maintains an **independently owned and operated** Authorized Service Center Network with more than 400 authorized service centers nationwide. The authorized service centers will repair or replace parts under warranty at no extra charge, and can perform non-warranty repairs for a minimal charge. Please see the Authorized Service Center list beginning on page 27 to find the authorized service center nearest you, or call **1-800-348-0751**.
- Please complete and return the enclosed Registration Card today, or call **1-800-348-0751** to register your vehicle by phone, or register on-line at www.powerwheels.com.

B Warnings and Cautions

ELECTRICAL HAZARD

⚠ WARNING

- Battery can fall out and injure a child if vehicle tips over. Always use battery clamp.
- **PREVENT FIRE**
  - Never modify the electrical system. Alterations could cause a fire resulting in serious injury and could also ruin the electrical system.
  - Use of the wrong type battery or charger could cause a fire or explosion resulting in serious injury.
  - Use of Power Wheels® components in products other than Power Wheels® vehicles could cause overheating, fire or explosion.
- The battery must be handled by adults only. The battery is heavy and contains sulfuric acid (electrolyte). Dropping the battery could result in serious injury.
- Never allow children to charge the battery. Battery charging must be done by adults only. A child could be injured by the electricity involved in charging the battery.
- Never lift or carry the battery by the wires or connector. This can damage the battery and possibly cause a fire resulting in serious injury. Lift and carry the battery by the case only.
- Read the safety instructions on the battery.
- Examine the battery, charger and their connectors for excessive wear or damage each time you charge the battery. If damage or excessive wear is detected, do not use the charger or the battery until you have replaced the worn or damaged part.
- **HOT** motors. Handle carefully.

RIDING HAZARD

⚠ WARNING

- **Prevent Injuries and Deaths**
  - Direct Adult Supervision Required
  - Keep Children Within Safe Riding Areas.
    These areas must be:
    - away from swimming pools and other bodies of water to prevent drownings
    - generally level to prevent tipovers
    - away from steps, driveways, cars, roads and alleys.

⚠ CAUTION

- In the unassembled state, this package contains small parts. Adult assembly is required.
- Use the charger in dry locations only.

C Parts

- If you experience a problem with this product, or are missing a part, please call us at **1-800-348-0751,** rather than return this product to the store.
- Please identify all parts before assembly and save all packaging material until assembly is complete to ensure that no parts are discarded.
- Metal parts have been coated with a lubricant to protect them during shipment. Wipe all metal parts with a paper towel to remove any excess lubricant.

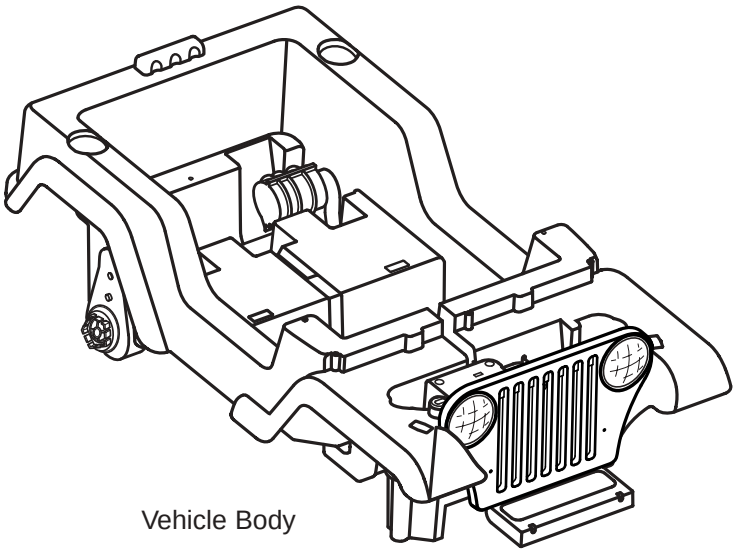

Vehicle Body

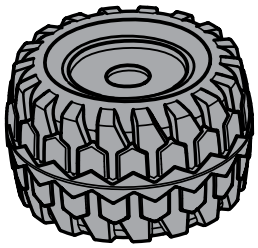

Wheel - 4

Hood Latch - 2

Hubcap - 4

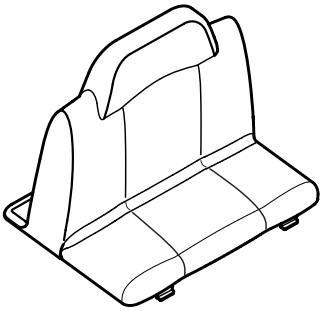

Seat

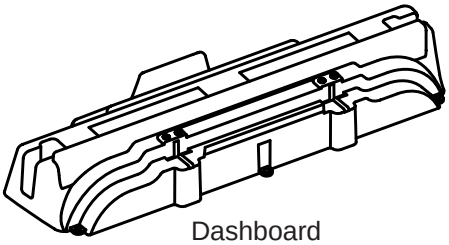

Dashboard

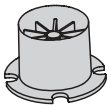

Driver - 2

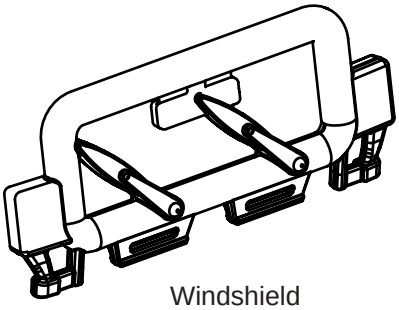

Windshield

Parts

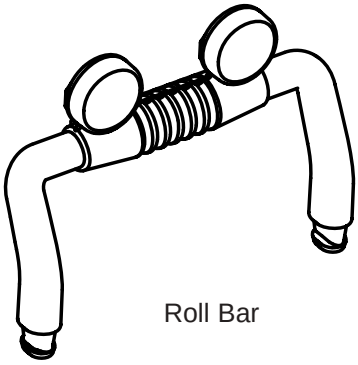

Roll Bar

Steering Wheel

Steering Wheel Cap

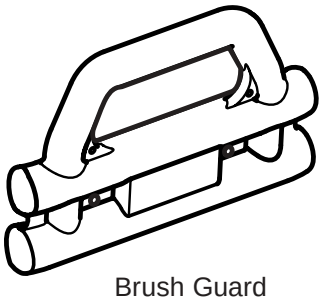

Brush Guard

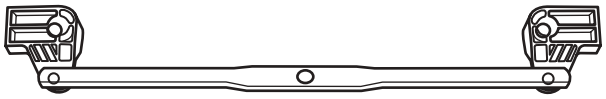

Steering Linkage

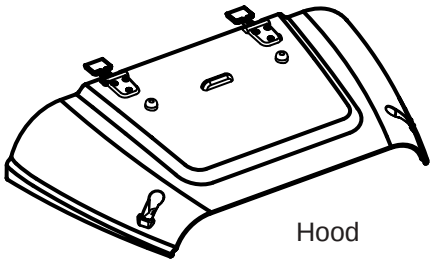

Hood

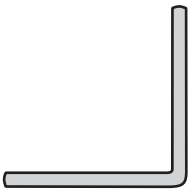

Front Axle - 2
(Located in motors in
back end of vehicle body.)

Rear Axle

Steering Column

Parts

Bushing - 2

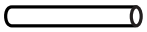

Spacer - 2

Long Bushing - 2

Assembly Tool

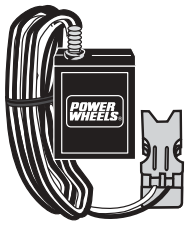

Super 6 Volt Charger

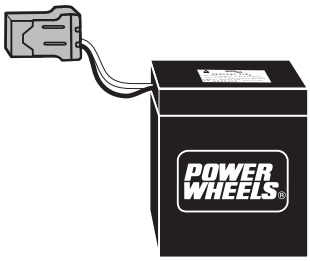

6 Volt Battery

Not Shown: Label Sheet - 2

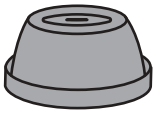

.437 Cap Nut – 8*

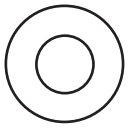

Washer - 4*

#10 x 1" Screw - 8*

#8 x 4" Screw - 2

#8 x 1" Screw - 2

***Note:** For your convenience, we have included two extra cap nuts, and one extra washer and 1" screw.

Fasteners Shown Actual Size

D Parts Diagram

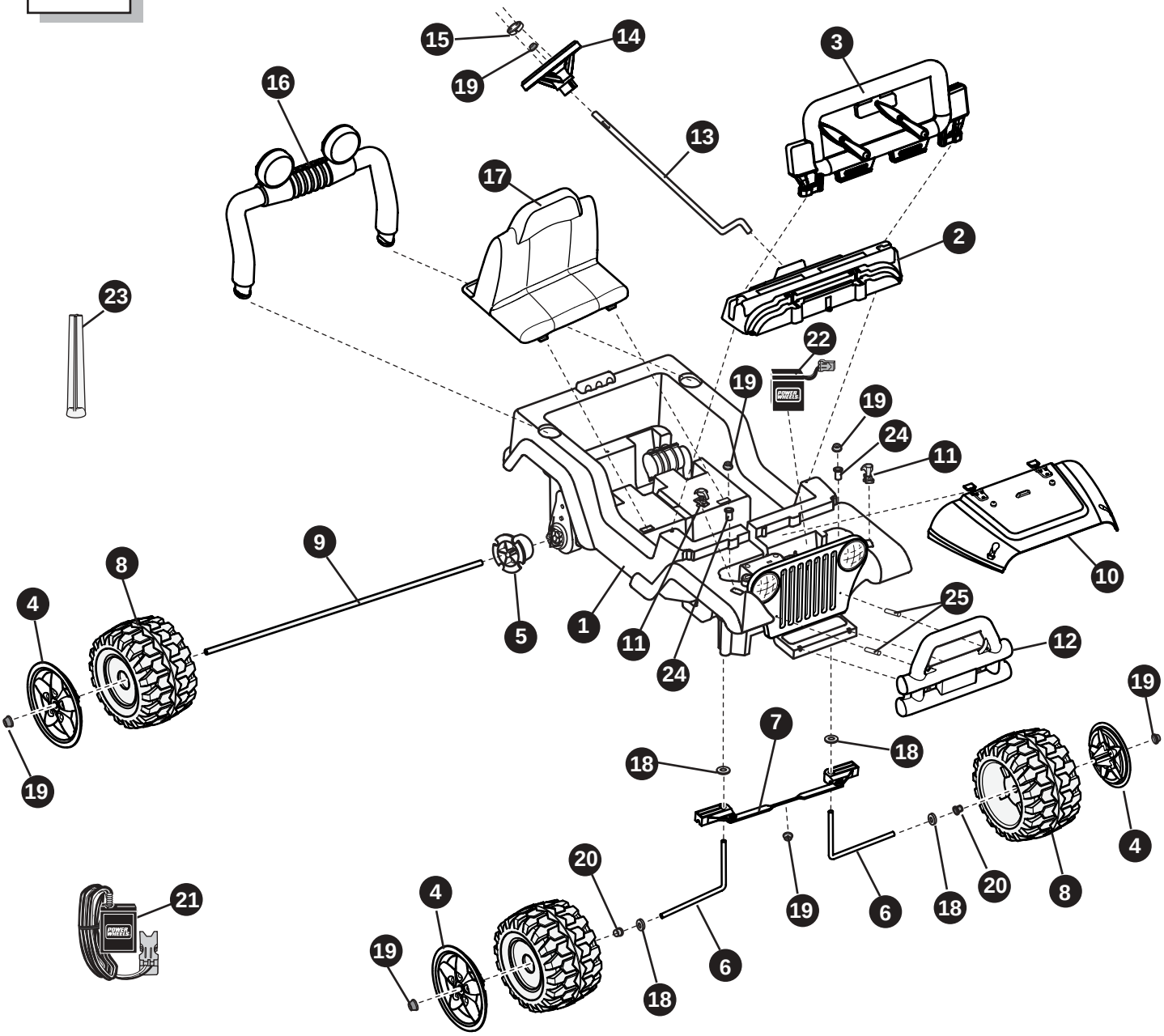

Hint: *Some parts shown are assembled on both sides of the vehicle.*

1. Vehicle Body	11. Hood Latch - 2	21. Super 6 Volt Charger
2. Dashboard	12. Brush Guard	22. 6 Volt Battery
3. Windshield	13. Steering Column	23. Assembly Tool
4. Hubcap - 4	14. Steering Wheel	24. Long Bushing - 2
5. Driver - 2	15 Steering Wheel Cap	25. Spacer - 2
6. Front Axle - 2	16. Roll Bar	**Not Shown**
7. Steering Linkage	17. Seat	#10 x 1" Screw - 8
8. Wheel - 4	18. Washer - 4	#8 x 4" Screw - 2
9. Rear Axle	19. .437 Cap Nut - 8	#8 x 1" Screw - 2
10. Hood	20. Short Bushing - 2	Label Sheet - 2

E Battery Charging

ELECTRICAL HAZARD

⚠ WARNING

- Battery can fall out and injure a child if vehicle tips over. Always use battery clamp.
- **PREVENT FIRE**
  - Never modify the electrical system. Alterations could cause a fire resulting in serious injury and could also ruin the electrical system.
  - Use of the wrong type battery or charger could cause a fire or explosion resulting in serious injury.
  - Use of Power Wheels® components in products other than Power Wheels® vehicles could cause overheating, fire or explosion.
- The battery must be handled by adults only. The battery is heavy and contains sulfuric acid (electrolyte). Dropping the battery could result in serious injury.
- Never allow children to charge the battery. Battery charging must be done by adults only. A child could be injured by the electricity involved in charging the battery.
- Never lift or carry the battery by the wires or connector. This can damage the battery and possibly cause a fire resulting in serious injury. Lift and carry the battery by the case only.
- Read the safety instructions on the battery.
- Examine the battery, charger and their connectors for excessive wear or damage each time you charge the battery. If damage or excessive wear is detected, do not use the charger or the battery until you have replaced the worn or damaged part.

⚠ CAUTION

Use the charger in dry locations only.

About Thermal Fuses

Your Power Wheels® 6 volt battery with A-style connector is equipped with a built-in thermal fuse. The thermal fuse is a self-resetting safety device which automatically “trips” and shuts down operation of the vehicle if the vehicle is overloaded or the driving conditions too severe. Once a fuse has “tripped”, it will automatically reset itself after approximately 25 seconds and allow the vehicle to resume normal operations. To avoid repeated automatic shut-downs, do not overload the vehicle by exceeding the 65 lbs (29.5 kg.) maximum weight capacity or by towing anything behind the vehicle. Avoid severe driving conditions, such as driving up slopes or running into fixed objects, which can cause the wheels to stop spinning while power is still being supplied to the motors. Make sure your child stops the vehicle before switching speeds or direction.

If a thermal fuse in a battery continually trips under normal driving conditions, please contact your local Power Wheels® Authorized Service Center. For the location of the Authorized Service Center nearest to you, see page 27, or register on-line at www.powerwheels.com.

Important Notes

- **Your new battery must be charged for at least 18 hours before you use it in your vehicle for the first time.**
- We recommend that you start charging your battery before beginning assembly of your new vehicle.
- The battery must be upright while charging.
- The charger is not a toy.
- Do not short circuit the battery.
- You do not need to remove the battery from your vehicle to recharge it.
- Before charging the battery, examine the battery case for cracks and other damage which may cause sulfuric acid (electrolyte) to leak during the charging process. If damage is detected, do not charge the battery or use it in your vehicle. Battery acid is very corrosive and can cause severe damage to surfaces it contacts.
- Do not charge the battery on a surface (such as kitchen counter tops) which could be damaged by the acid contained inside the battery. Take precautions to protect the surface on which you charge your battery.
- Use only a Power Wheels® Super 6™ volt charger with an A-style connector (120 VAC, 60 Hz, 15W with an output of 6 VDC, 7.2W) to charge your Power Wheels® 6 volt battery.
- If your battery is old and will not accept a charge, do not leave it in the vehicle. Always remove a dead battery from the vehicle.

Battery Charging

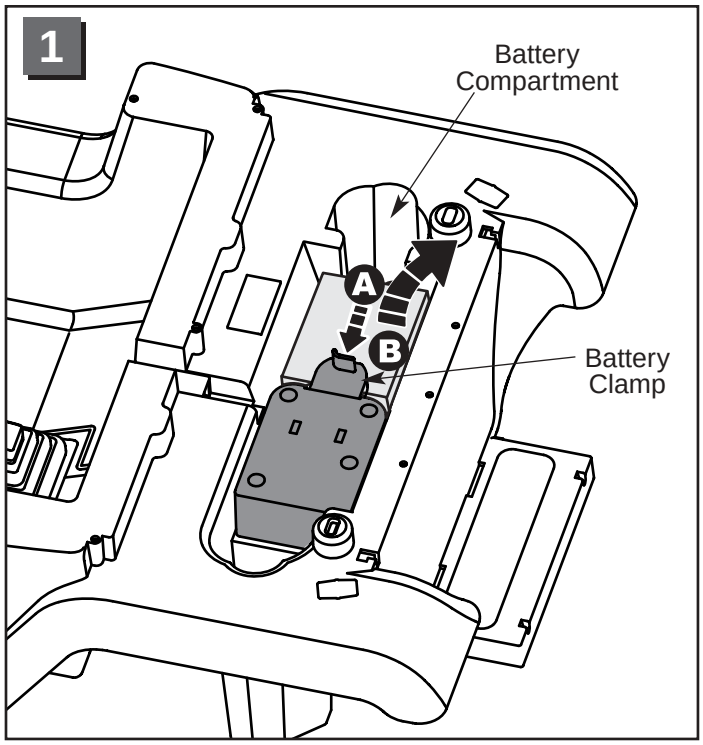

- Locate the battery compartment in the front end of the vehicle body.
- Slide the battery clamp open Ⓐ.
- While holding the battery clamp open, remove the battery from the battery compartment Ⓑ.
- Release the battery clamp.

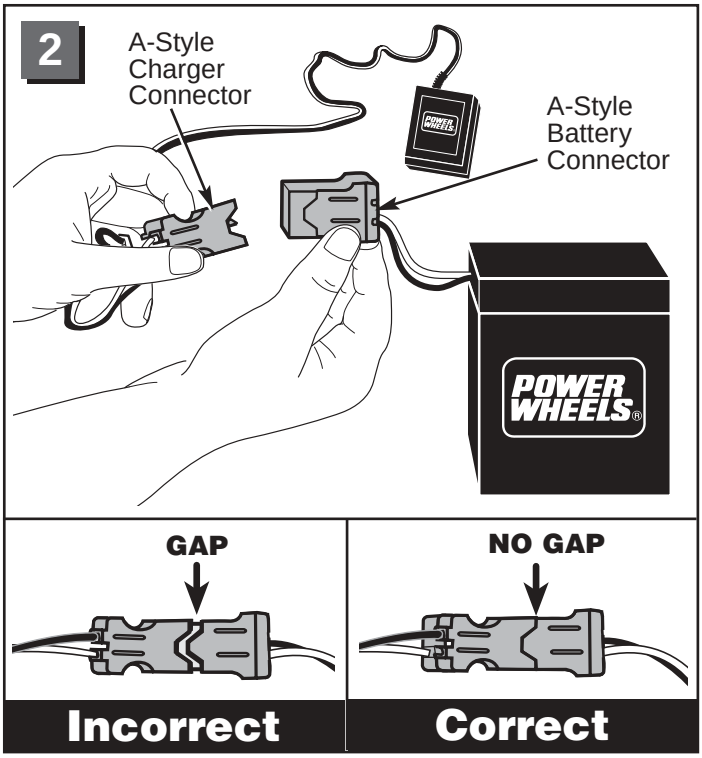

- Plug the battery connector and charger connector together. Push firmly to make sure the two connectors are completely joined.

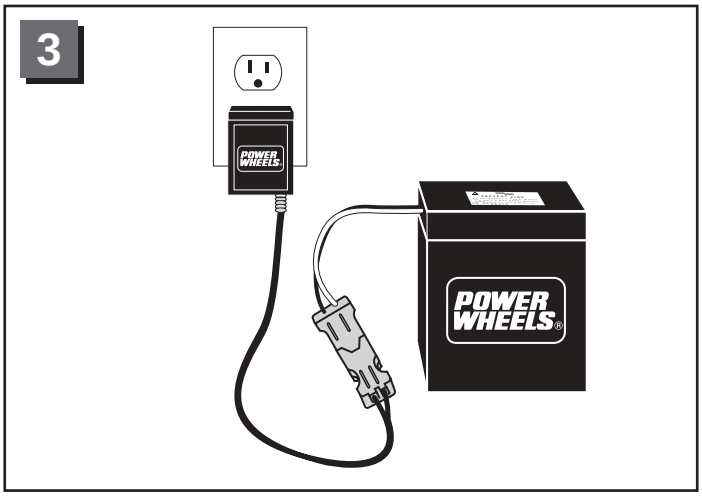

- Plug the charger into a standard 120 volt wall outlet.

Note: If power flow to the wall outlet is controlled by a switch, make sure the switch is “ON”.

- **Before first time use, charge the battery for at least 18 hours.** Never charge the batteries longer than 30 hours.
- **Recharge the battery for at least 14 hours** after each use of your vehicle. Do not charge a battery longer than 30 hours.
- Once the battery is charged, disconnect the charger connector from the battery connector. Unplug the charger from the wall outlet. The battery is now charged and is ready to be installed in your vehicle.

F Assembly

⚠ WARNING

Children can be harmed by small parts, sharp edges and sharp points in the vehicle's unassembled state, or by electrical items. Care should be taken in unpacking and assembly of the vehicle. Children should not handle parts, including the battery, or help in assembly of the vehicle.

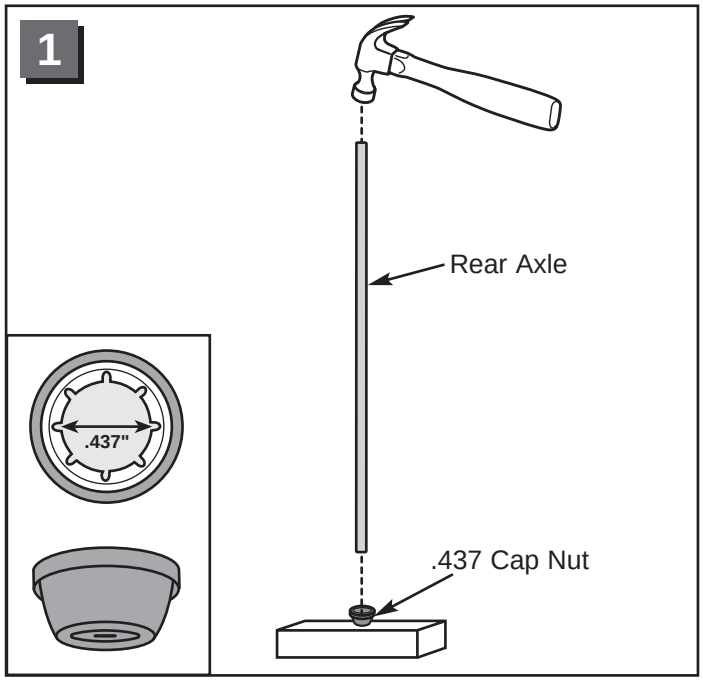

- Place a .437 cap nut on a flat surface, inside up, as shown.

Hint: *You may want to place a scrap block of wood underneath the cap nut to protect the assembly surface.*

- Fit the rear axle into the cap nut.
- Tap the opposite end of the rear axle with a hammer to secure the cap nut in the rear axle. Pull on the cap nut to be sure it is secure.

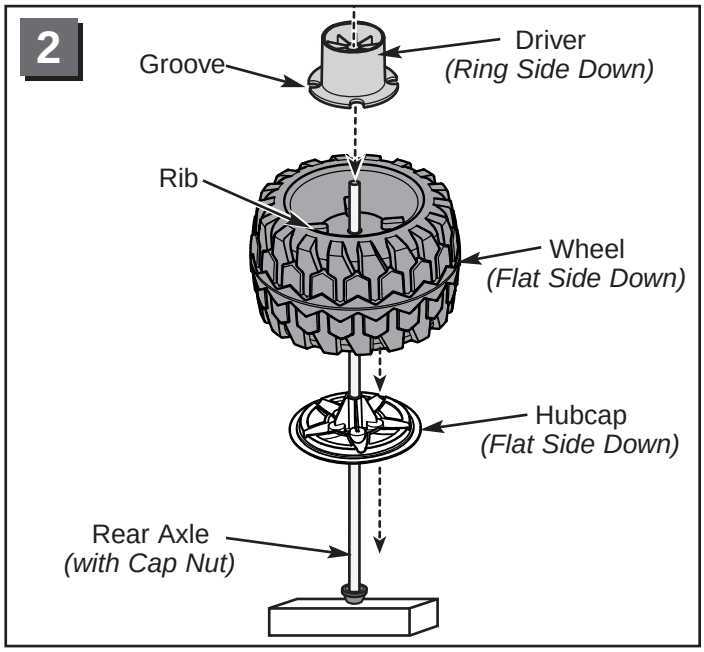

- Slide a hubcap *(flat side down)*, a wheel *(flat side down)* and a driver *(ring side down)* on the rear axle.
- Make sure the ribs on the wheel fit into the grooves in the driver.

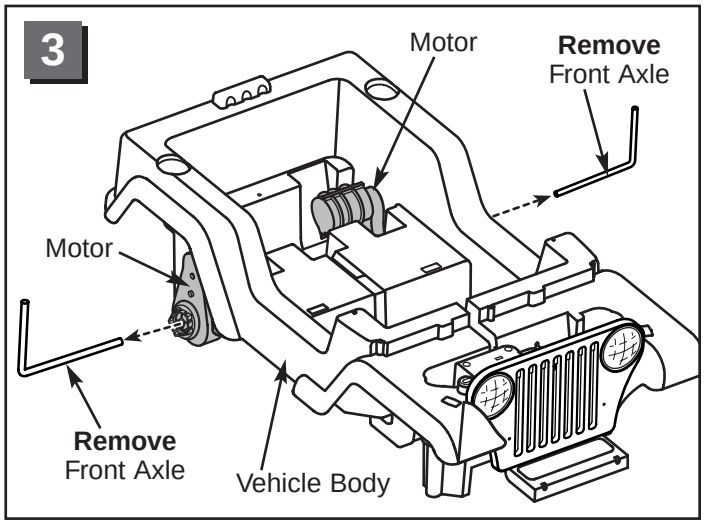

- **Carefully remove** the front axles from the motors in the vehicle body.

Hint: *Keep the motors in place in the vehicle body for the next assembly step.*

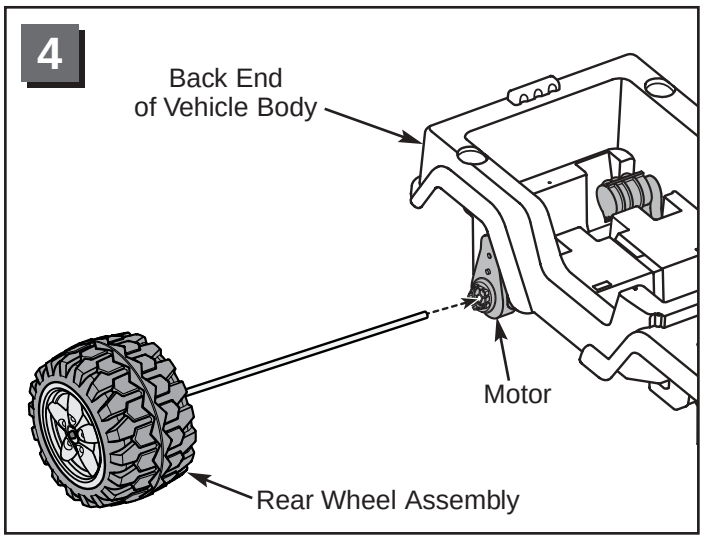

- Slide the rear wheel assembly through a motor and the back end of the vehicle body.

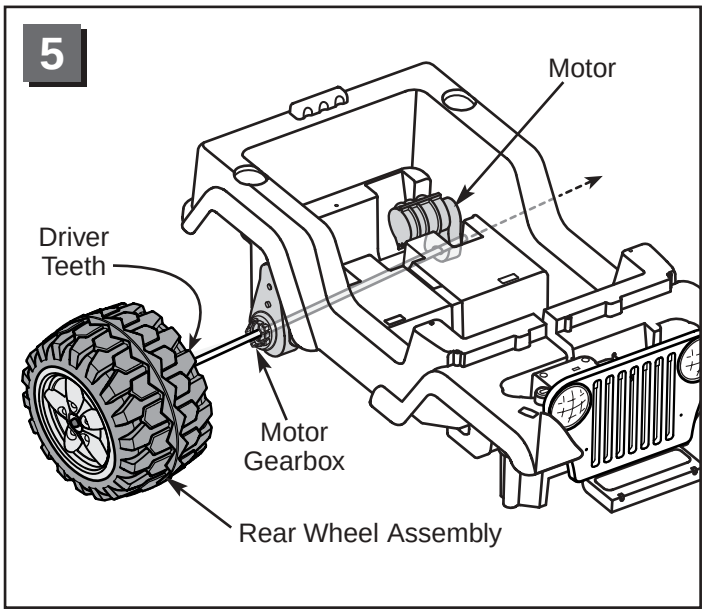

- Continue to slide the rear wheel assembly through the back end of the vehicle body, and out through the other motor.

Note: Make sure the teeth in the driver fit into the motor gearbox.

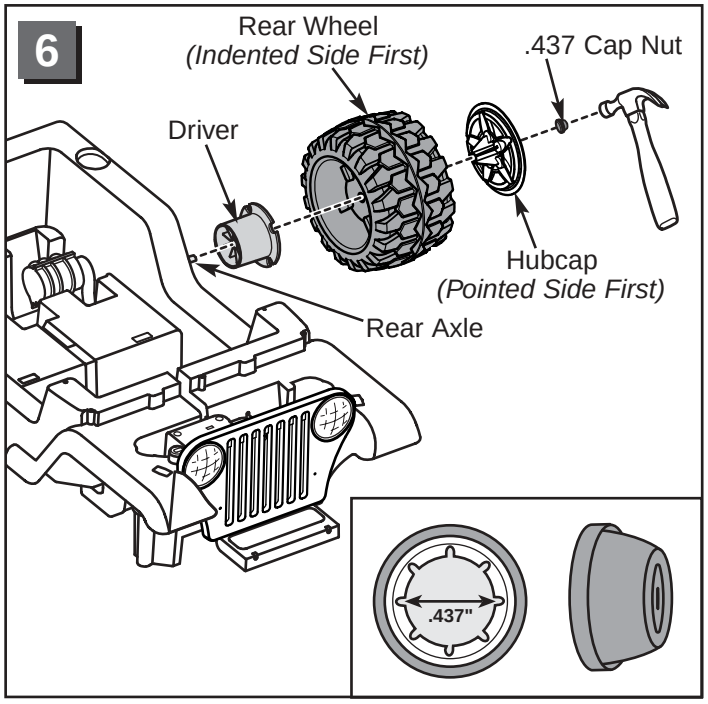

- Fit the other driver onto the end of the rear axle. Make sure the teeth in the driver fit into the motor gearbox.
- Slide a wheel *(indented side first)* and hubcap *(pointed side first)* onto the end of the rear axle. Make sure the ribs on the wheel fit into the grooves in the driver.
- Fit a .437 cap nut on the end of the rear axle.
- Tap the cap nut with a hammer to secure the cap nut on the rear axle. Pull on the cap nut to be sure it is secure.

Hint: *You may need the help of another adult to support the other end of the rear axle assembly while you tap the cap nut.*

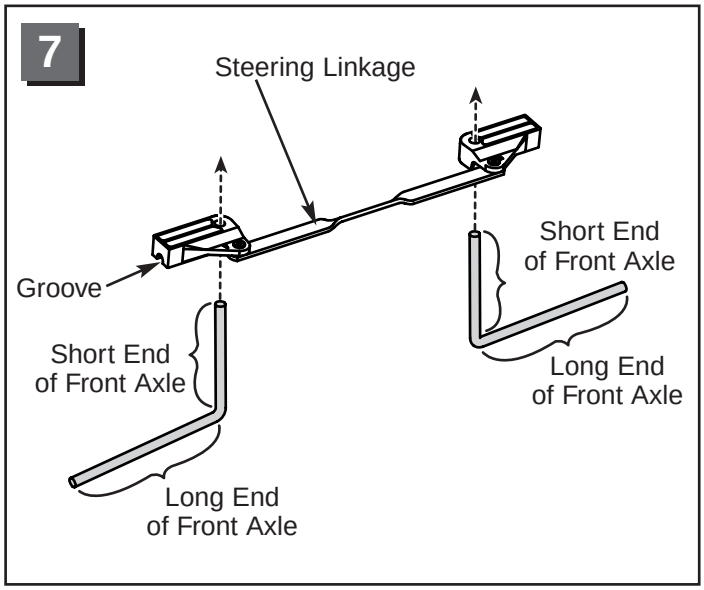

- Fit short end of the front axles up through the holes in the underside of the steering linkage. Make sure the long end of each front axle fits into the groove on each end of the steering linkage.

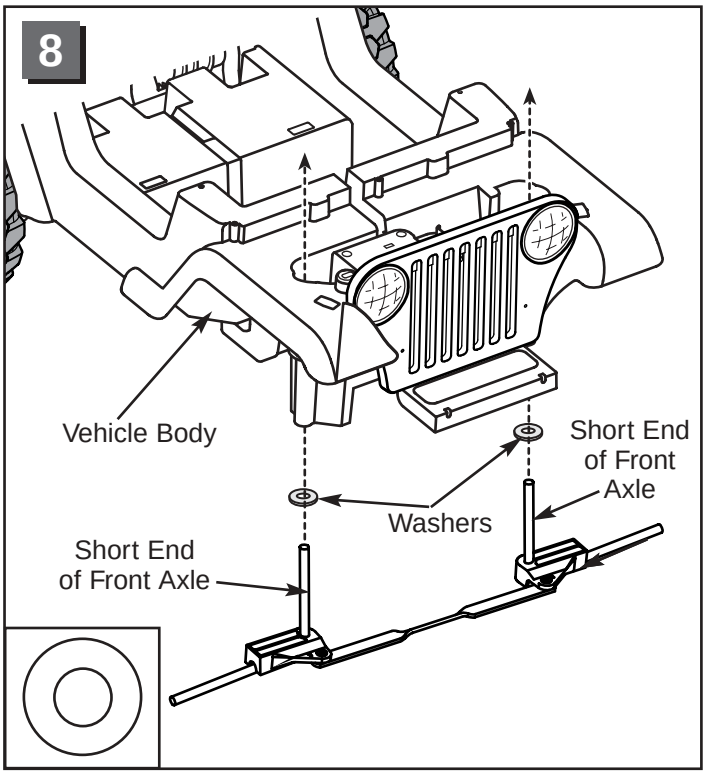

- Slide a washer onto the short end of each front axle.
- Fit the front axles up through the holes in the underside of the vehicle body.

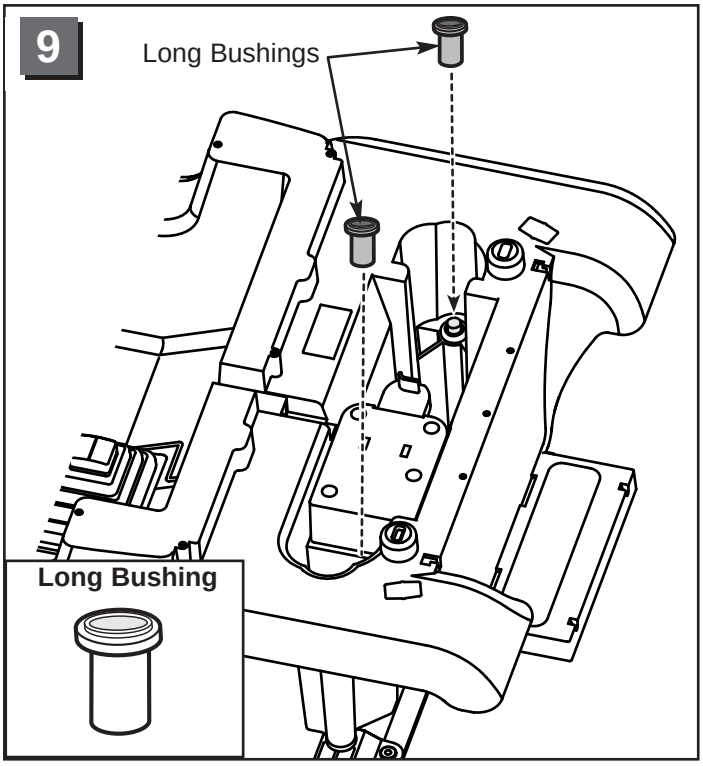

- While holding the front axle/steering linkage assembly in place, fit a long bushing onto the end of each front axle.
- Push each long bushing so that it fits completely into the vehicle body.

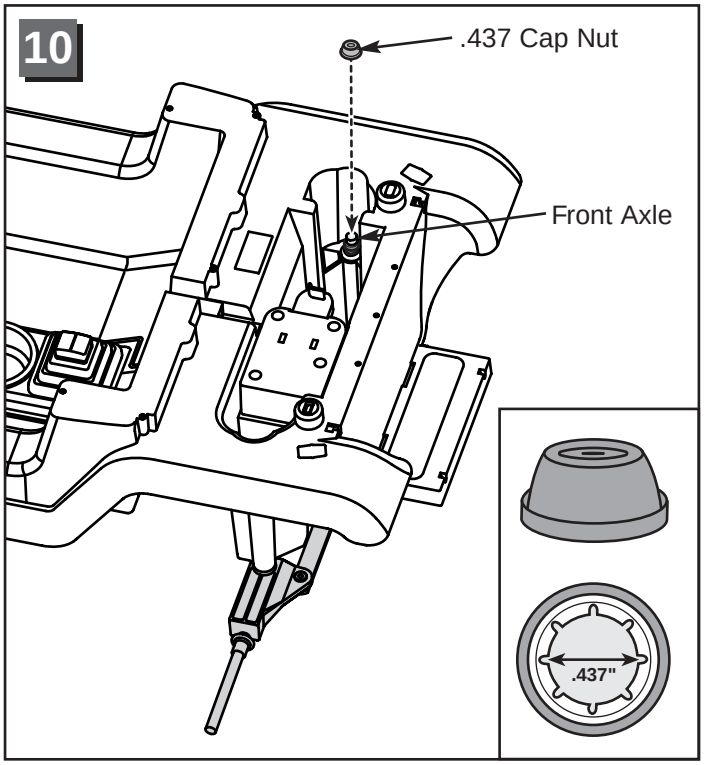

- Fit a .437 cap nut onto the end of each front axle.

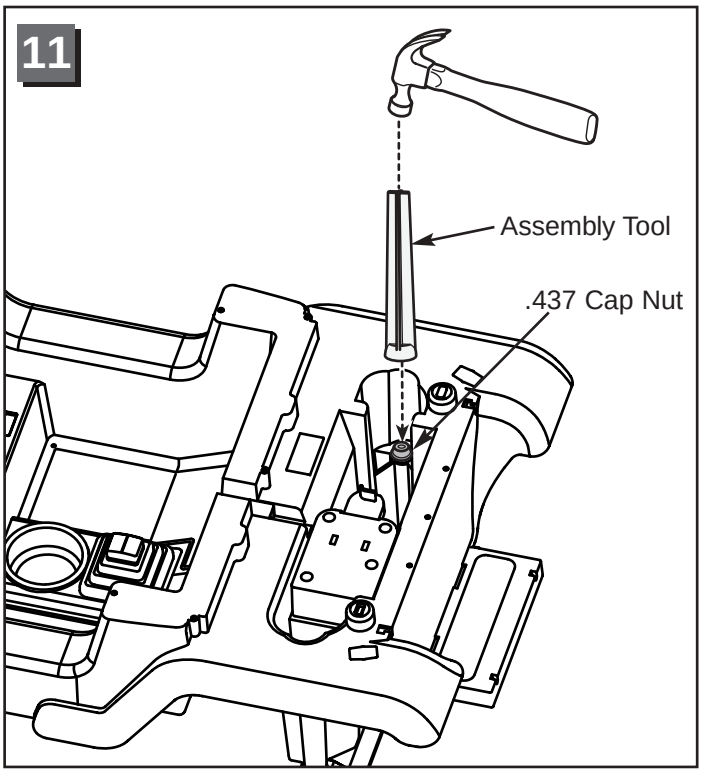

- Fit the assembly tool onto the cap nut.
- While supporting the front axle/steering linkage assembly, tap the assembly tool with a hammer to secure the cap nut on the end of the front axle. Pull on the cap nut to be sure it is secure.
- Repeat this procedure to fasten a cap nut to the other front axle. Throw the assembly tool away.

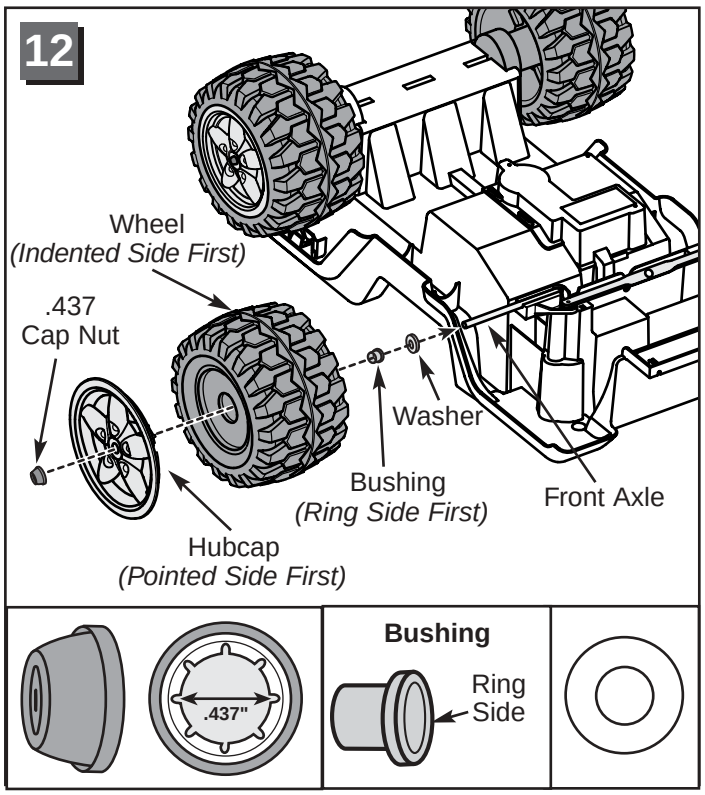

- Turn the vehicle assembly upside down on a flat surface.
- Fit a washer, bushing *(ring side first)*, wheel *(indented side first)* and hubcap *(pointed side first)* onto one of the front axles.
- Fit a .437 cap nut onto the end of the front axle.
- Tap the cap nut with a hammer to secure the cap nut on the front axle. Pull on the cap nut to be sure it is secure.
- Repeat this procedure to assemble the other washer, bushing, wheel, hubcap and cap nut to the other front axle.

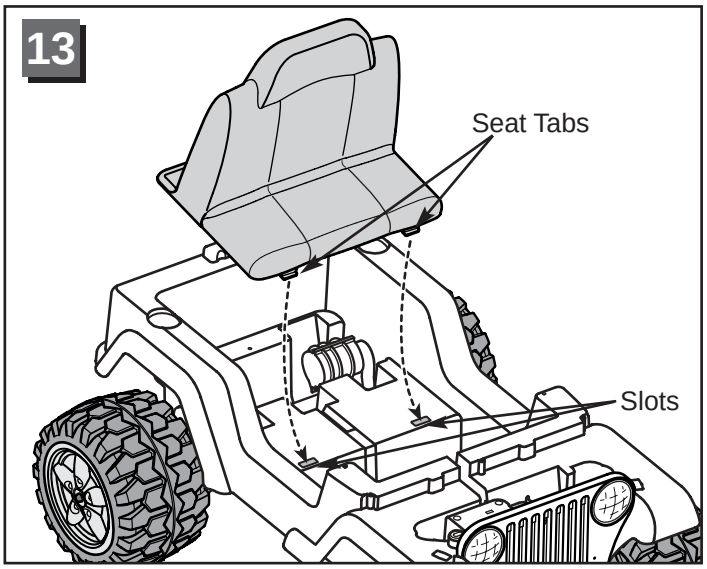

- Turn the vehicle assembly upright.
- Fit the two tabs on the front of the seat into the two slots in the vehicle body.

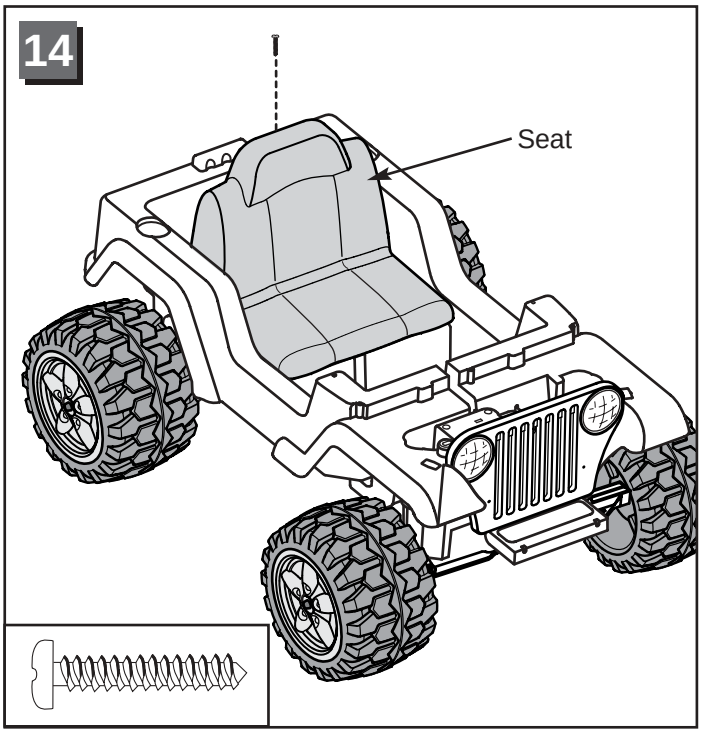

- Insert a #10 x 1" screw through the back of the seat and into the vehicle body.
- Tighten the screw with a Phillips screwdriver. Do not over-tighten.

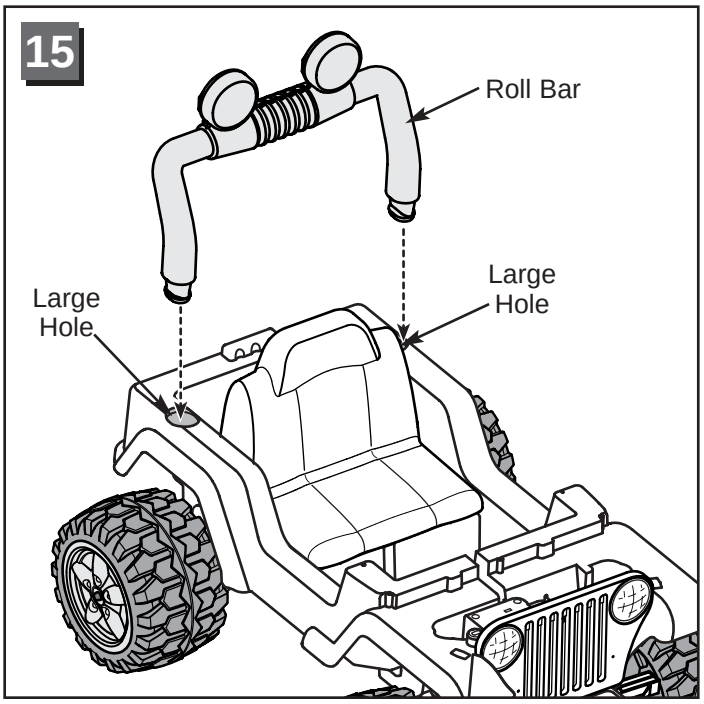

- Position the roll bar so that it **bends toward the back end** of the vehicle.
- Insert and **"snap"** the roll bar into the large holes in the top side of the vehicle body, as shown.
- Pull up on the roll bar to be sure it is secure.

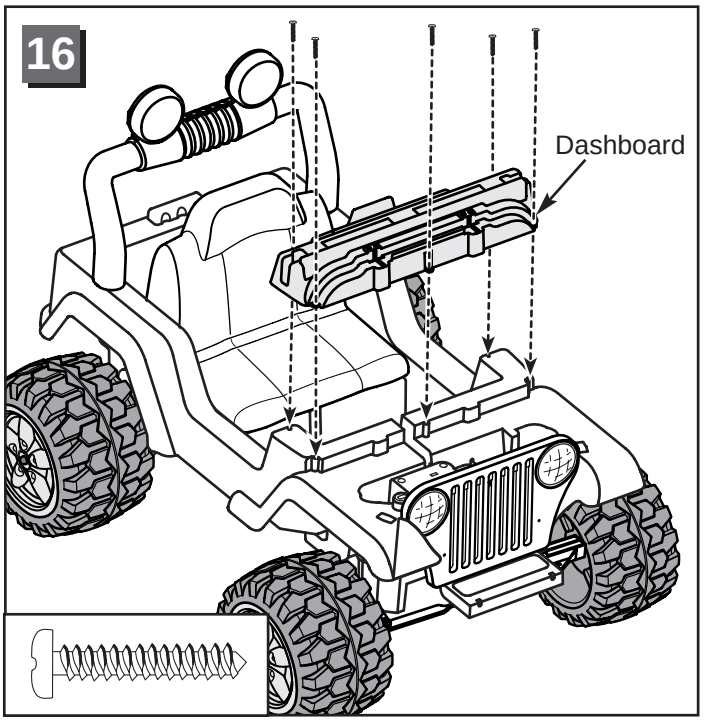

- Place the dashboard on the top side of the vehicle body, as shown.
- Insert five #10 x 1" screws through the dashboard and into the vehicle body.
- Tighten the screws with a Phillips screwdriver. Do not over-tighten.

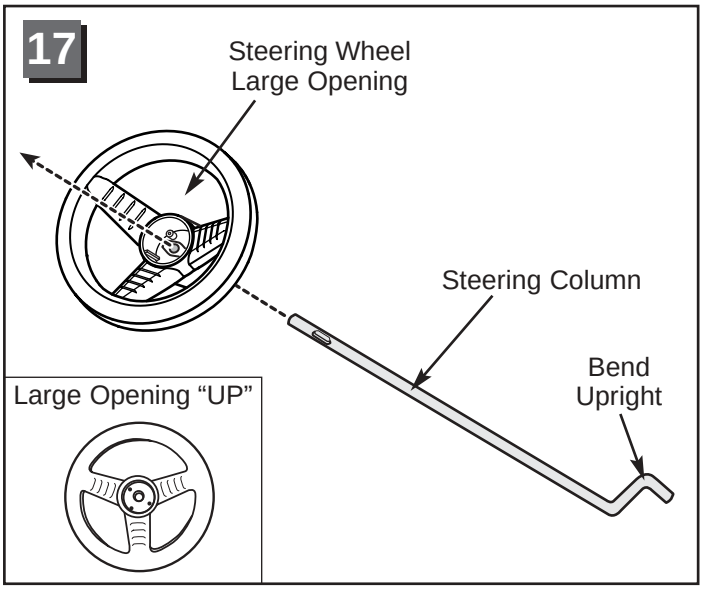

- Position the steering wheel with the large opening **upright**.
- Position the steering column so that the bend is **upright**, as shown.
- Fit the steering column through the center hole in the steering wheel.

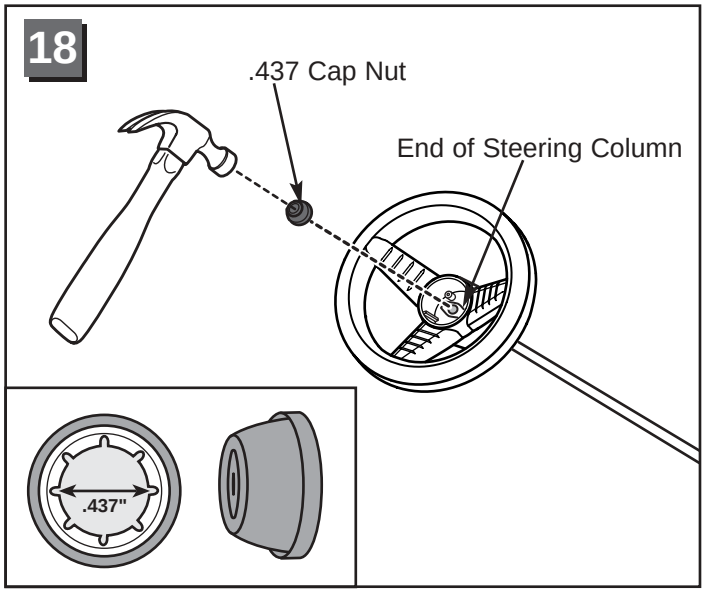

- Fit a .437 cap nut on the end of the steering column.
- Tap the cap nut with a hammer to secure the cap nut on the steering column. Pull on the cap nut to be sure it is secure.

Hints:

- *You may need the help of another adult to keep these two parts in the correct position.*
- *You may want to position the steering column on a scrap block of wood to protect the assembly surface.*

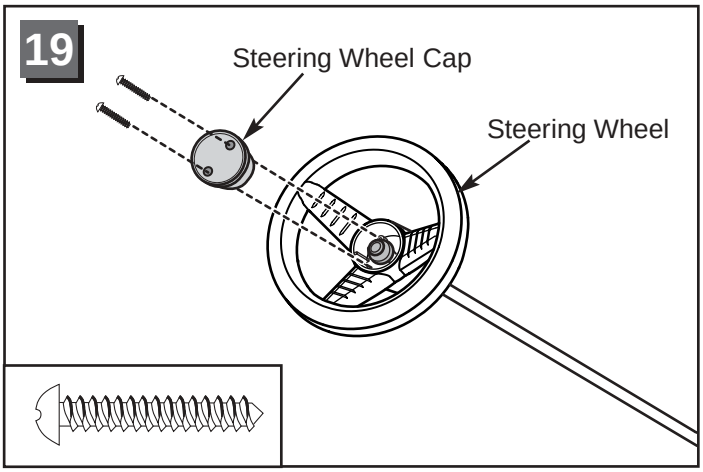

- Fit the steering wheel cap into the center of the steering wheel. Be sure to align the notch in the steering wheel cap with the tab in the center of the steering wheel.
- Insert two #8 x 1" screws through the steering wheel cap and into the steering wheel.
- Tighten the screws with a Phillips screwdriver. Do not over-tighten.

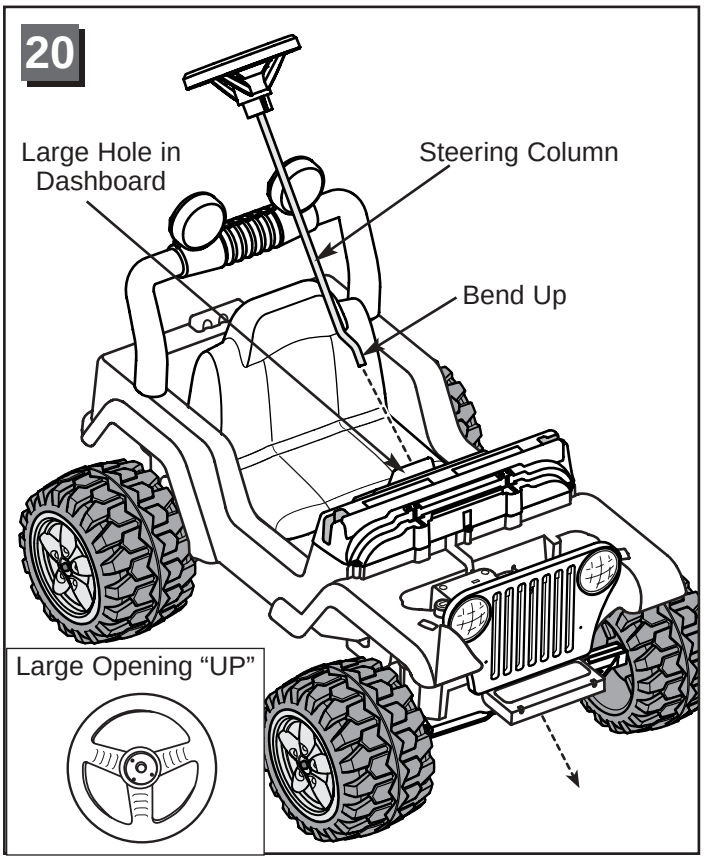

- Insert the steering column (with steering wheel) into the large hole in the dashboard. Make sure the large opening in the steering wheel and the bend in the steering column are facing UP.

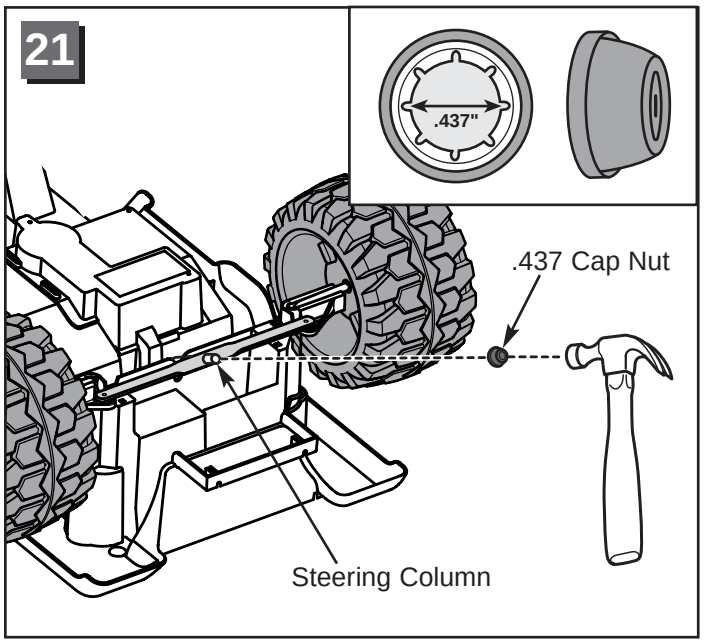

- Carefully, turn the vehicle over, keeping the steering wheel and steering column in place.
- Fit a .437 cap nut on the end of the steering column.
- Tap the cap nut with a hammer to secure the cap nut on the steering column. Pull on the cap nut to be sure it is secure.

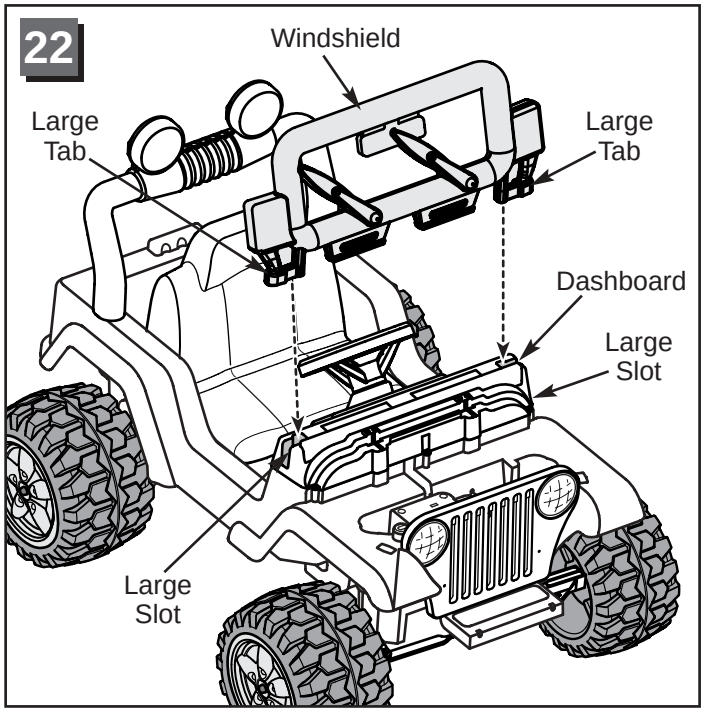

- Turn the vehicle upright.
- Position the windshield so that the **wipers face the front** end of the vehicle.
- Insert and **"snap"** the two large tabs on the windshield into the large slots in the dashboard.
- Pull up on the windshield to be sure it is secure.

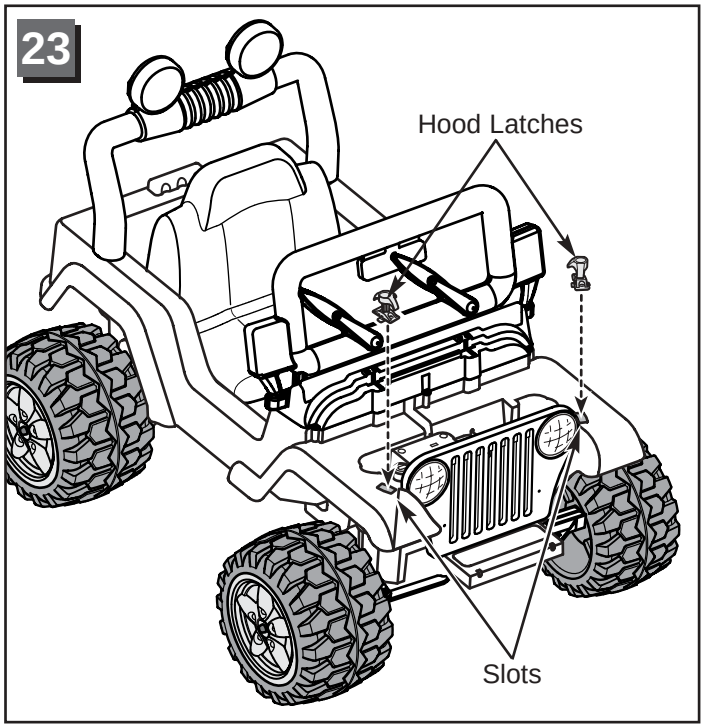

- Insert a hood latch into the slots in the front end of the vehicle body.
- Turn each hood latch a 1/4 turn to secure in place. Pull up on the hood latches to be sure they are secure.

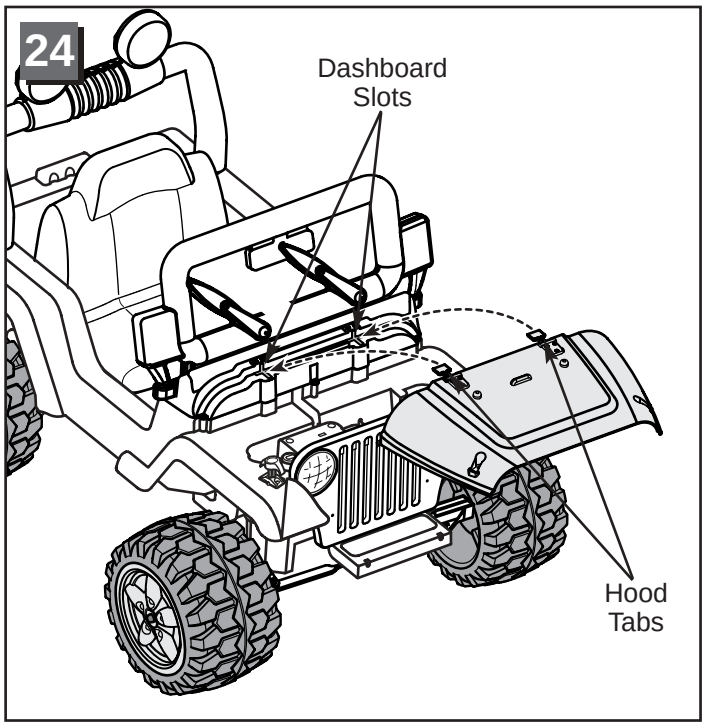

- Insert the tabs on the rear edge of the hood into the slots in the front of the dashboard.

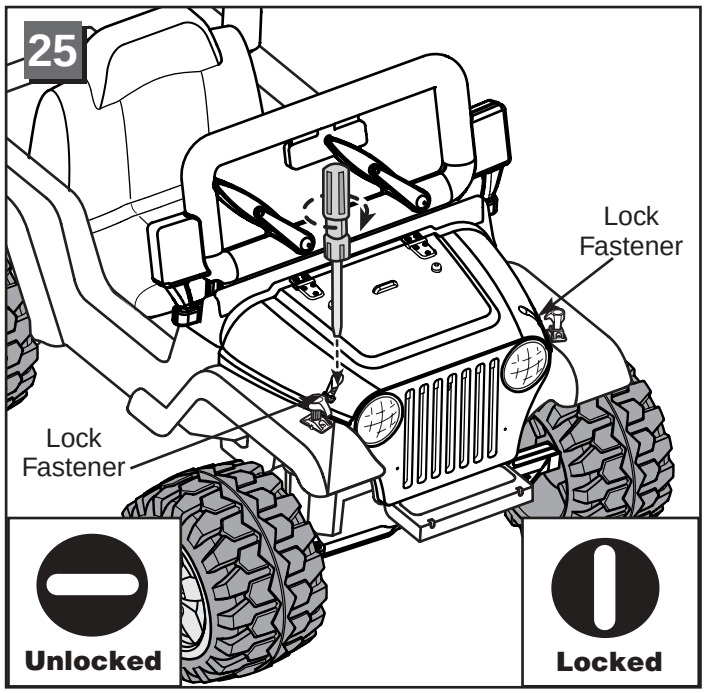

- Using a slotted screwdriver, turn each lock fastener in the hood 1/4 turn to the locked position.

IMPORTANT! Remember to keep the lock fasteners locked at all times to prevent children from accessing the vehicle battery compartment.

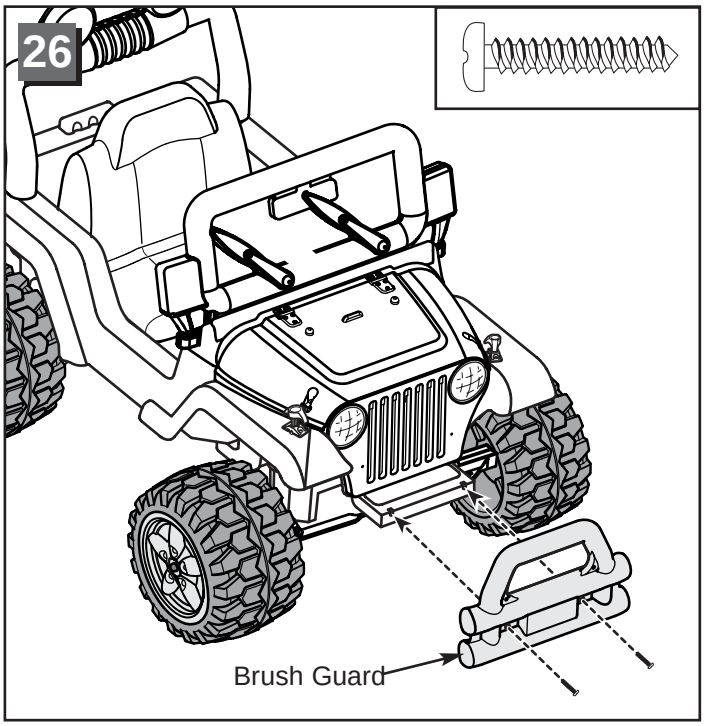

- Fit the brush guard on the front end of the vehicle.
- Insert two #10 x 1" screws through the **lower** holes in the brush guard and into the front end of the vehicle.
- Tighten the screws with a Phillips screwdriver. Do not over-tighten.

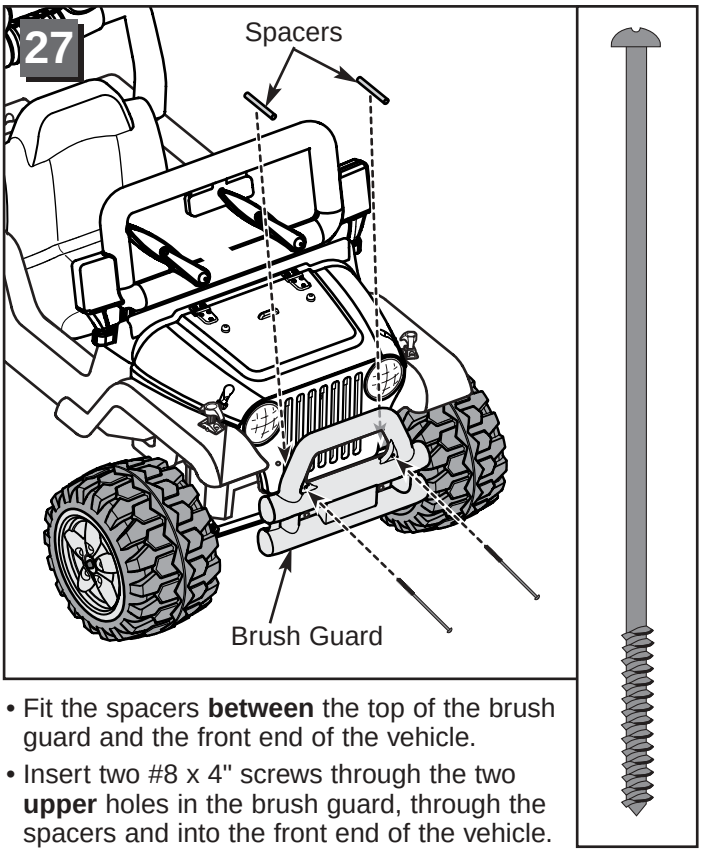

- Fit the spacers **between** the top of the brush guard and the front end of the vehicle.
- Insert two #8 x 4" screws through the two **upper** holes in the brush guard, through the spacers and into the front end of the vehicle.
- Tighten the screws with a Phillips screwdriver. Do not over-tighten.

G Label Decoration

Proper label application will help to keep the labels looking their best! When applying labels, keep the following guidelines in mind:

- Wash your hands before applying the labels.
- Before applying the labels, wipe the surface of the vehicle with a clean, dry cloth to remove any dust or oils.
- Place the labels exactly as shown in the illustrations.
- For best results, avoid repositioning a label once it has been applied to the vehicle.
- After applying a label, rub the label firmly with a clean, dry cloth to make sure the label is adhered to your vehicle. Start at the center of a label, and smooth towards the outer edges to remove air bubbles.

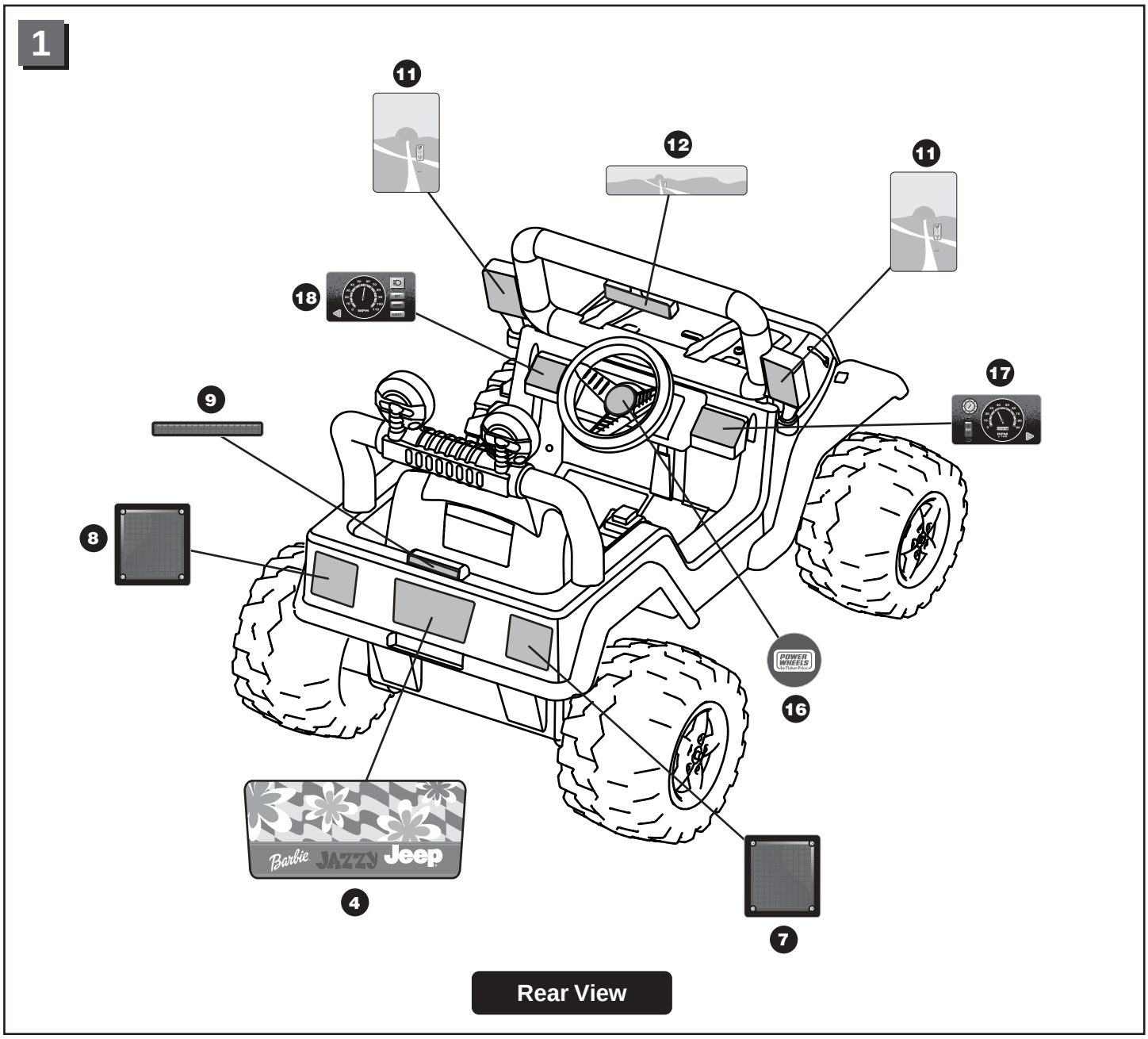

Label Decoration

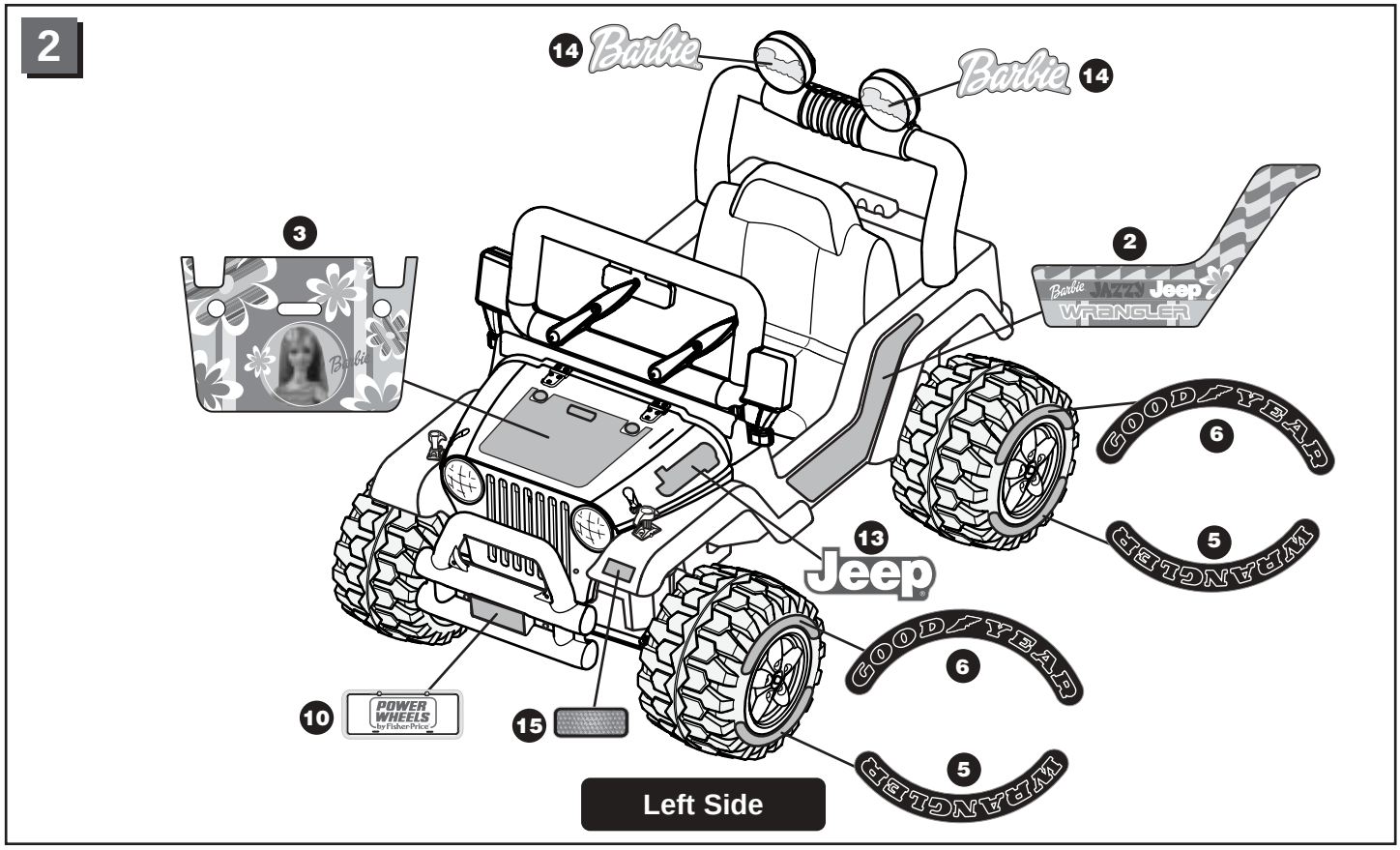

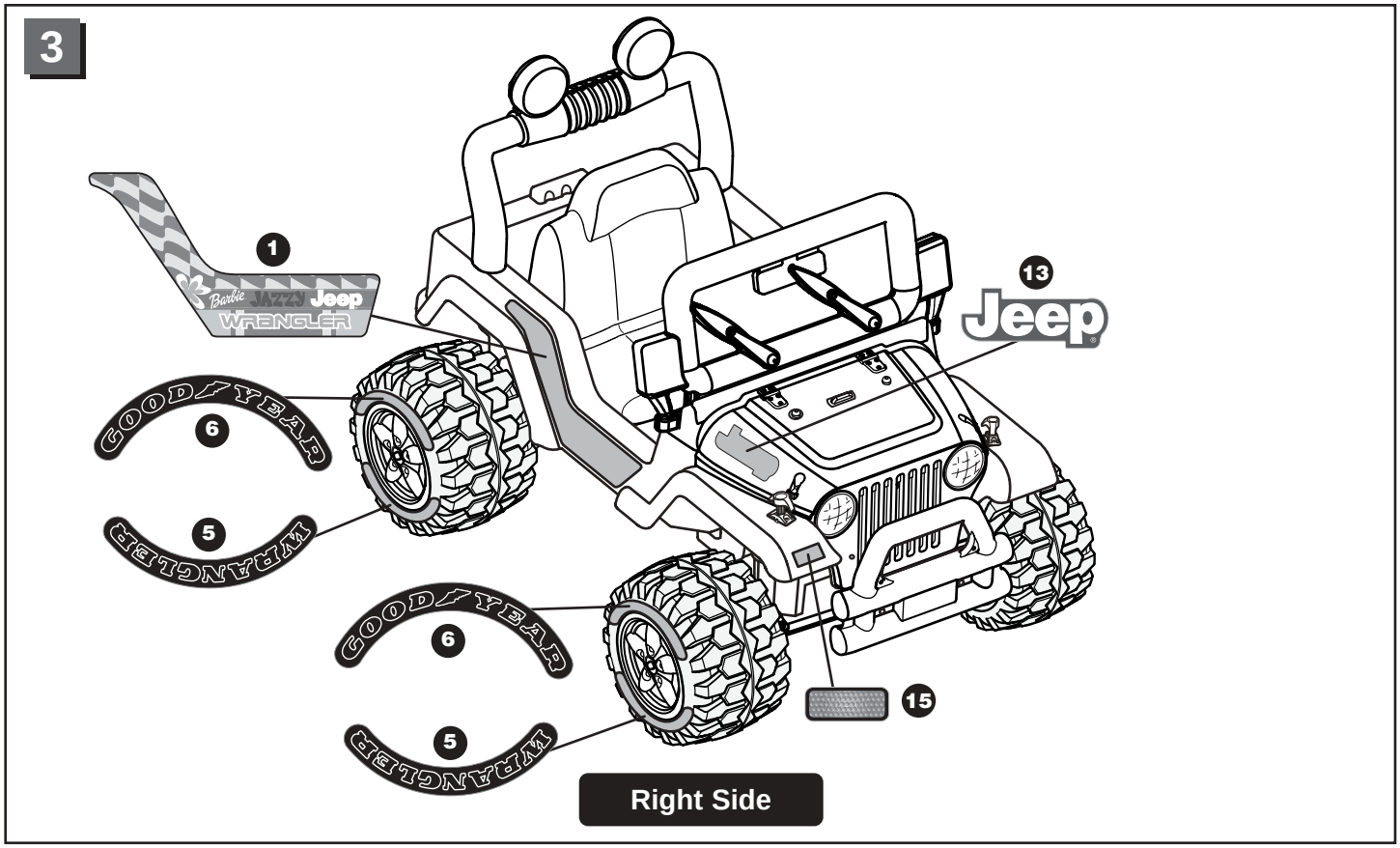

H Battery Installation

IMPORTANT! Use only a Power Wheels® 6 volt battery with A-style connector and built-in thermal fuse. Use of any other battery will damage your vehicle. Make sure that you charge the battery for at least 18 hours using the enclosed Power Wheels® Super 6™ volt charger **before operating your vehicle for the first time.** Charge the battery for at least 14 hours after each use of the vehicle. Never charge the battery longer than 30 hours. Failure to follow these instructions may damage your battery and will void your warranty.

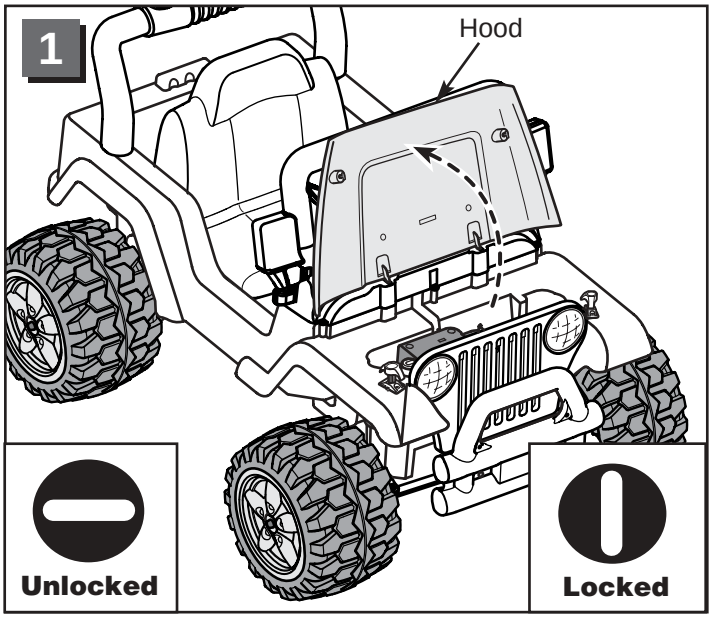

- Using a slotted screwdriver, turn each lock fastener 1/4 turn to the unlocked ⊖ position.
- Lift the hood to access the battery compartment.

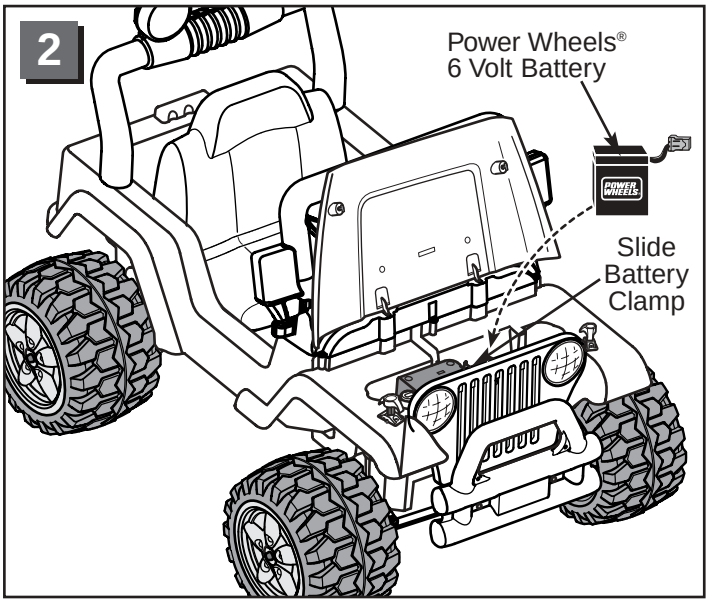

- Slide the battery clamp open.
- Place the battery in the battery compartment and release the battery clamp.

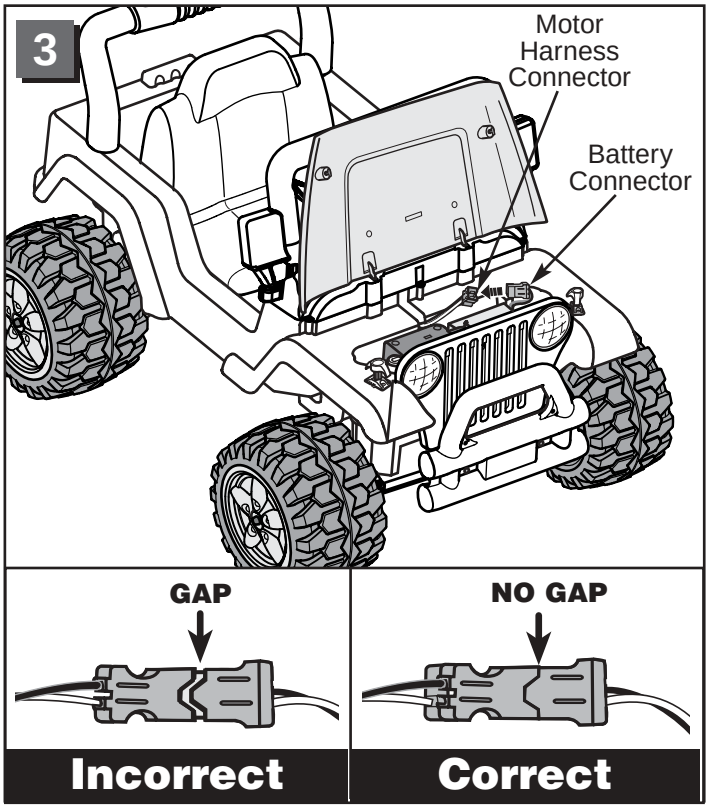

- Plug the battery connector into the motor harness connector.

Note: If the battery connector will not plug into the motor harness connector, turn it over and try again! Do not force the battery connector into the motor harness connector.

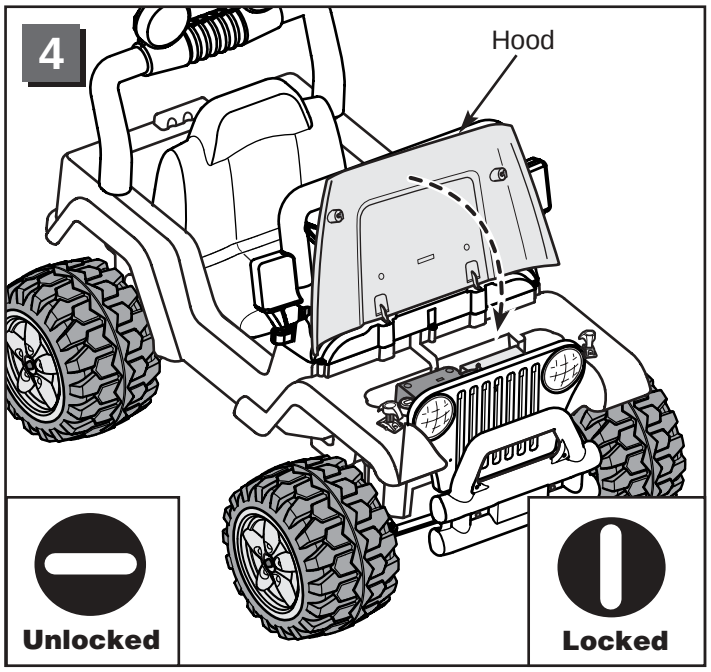

- Lower the hood on the vehicle. Using a slotted screwdriver, turn each lock fastener 1/4 turn to the locked ◐ position.

IMPORTANT! Remember to keep the lock fasteners locked at all times to prevent children from accessing the battery compartment.

I Battery Care and Disposal

Care

If a battery leak develops, avoid contact with the leaking acid and place the damaged battery in a plastic bag. See information below for proper disposal.

If acid comes in contact with skin or eyes, flush with cool water for at least 15 minutes and call a physician.

If acid is internally ingested, give water, milk of magnesia or egg whites immediately. Never give emetics or induce vomiting. Call a physician.

- Charge a new battery for at least 18 hours before first use. Never charge the battery longer than 30 hours. Overcharging or undercharging the battery may shorten battery life and decrease vehicle running time.
- After the first charge, recharge the battery for at least 14 hours after each use. Never charge the battery longer than 30 hours. Charge the battery after each use, regardless of how long the vehicle was used.
- The battery must be upright while charging.
- Do not allow the battery to run down completely before charging.
- Charge the battery before storing the vehicle.
- Charge the battery at least once per month, even if the vehicle has not been used.
- Leaving the battery in a discharged condition will ruin it.
- Always remove an exhausted battery from the vehicle. Battery leakage and corrosion can damage the vehicle.
- Do not store the battery on a surface (such as kitchen counter tops) which could be damaged by the acid contained inside the battery. Take precautions to protect the surface on which you store the battery.
- Do not store the battery in temperatures above 75° F or below -10° F.
- Use only a Power Wheels® 6 volt battery. Remember to charge the new battery for at least 18 hours before first use.
- Prevent the battery from moving freely inside the battery compartment. Always use the battery clamp to secure the battery in the battery compartment.
- Examine the battery, charger and their connectors for excessive wear or damage each time you charge the battery. If damage is detected, do not use the charger or the battery until you have replaced the worn or damaged part.

Disposal

- Your Power Wheels® battery is sealed lead-acid battery. It must be recycled or disposed of in an environmentally sound manner.
- Do not dispose of a lead-acid battery in a fire. The battery may explode or leak.
- Do not dispose of a lead-acid battery in your regular, household trash. The incineration, landfilling or mixing of sealed lead-acid batteries with household trash is prohibited by law in most areas.
- Return an exhausted battery to a federal or state approved lead-acid battery recycler, such as a Power Wheels® authorized service center or a local seller of automotive batteries. For the authorized service center location nearest to you, please call **1-800-348-0751.** Contact your local waste management officials for other information regarding the environmentally sound collection, recycling and disposal of lead-acid batteries. If you live in the State of Florida or the State of Minnesota, it is prohibited by law for anyone to throw away lead-acid batteries in the municipal waste stream.

J Caring For Your Vehicle

- Check all screws, cap nuts and their protective coverings regularly and tighten as required. Check plastic parts on a regular basis for cracks or broken pieces.
- During snowy or rainy weather, the vehicle should be stored inside or under a protective cover. Remember to charge the battery at least once per month while your vehicle is not in regular use.
- Avoid operating the vehicle in wet or snowy conditions, and do not spray the vehicle with a hose. Do not wash the vehicle with soap and water. Water or moisture in the motors or electrical switches can cause them to corrode, and could cause switch or motor failure.
- Avoid operating the vehicle on sand, loose dirt or gravel. Sand, loose dirt or gravel in the motors or electrical switches can cause them to jam, and could cause switch or motor failure.
- The vehicle can be wiped down with a soft, dry cloth. For a shiny finish, you can wipe plastic parts with a non-wax furniture polish applied to a soft-cloth. Do not use automotive wax. Do not use soap and water or spray the vehicle with a hose.
- To ensure that your vehicle stays in good operating order, we recommend that you periodically have your vehicle checked by a Power Wheels® authorized service center. See page 27 for the list of authorized service centers or call **1-800-348-0751** for the location of the authorized service center nearest you.

RIDING HAZARD

⚠ WARNING

Prevent Injuries and Deaths

- Direct Adult Supervision Required.
- Keep Children Within Safe Riding Areas

These areas must be:

- away from swimming pools and other bodies of water to prevent drownings.
- generally level to prevent tipovers.
- away from steps, driveways, cars, roads and alleys.

Teach Safety Rules to Children

While children can quickly develop the skill necessary to drive this vehicle, it is important to remember that their judgment skills are still very immature. Unsupervised driving by children can lead to serious injury. Before children use this vehicle, an adult should carefully evaluate the driving area as well as the children's skill level and ability to drive this vehicle safely. Children are not always able to recognize or anticipate hazards, even when they have been taught about them. **THERE IS NO ACCEPTABLE SUBSTITUTE FOR DIRECT ADULT SUPERVISION.**

Teach appropriate safety rules to your child before allowing operation of this vehicle. These rules should also be reviewed with neighborhood children or other playmates who want to drive this vehicle.

Riding Rules

Make sure children know and follow these rules for safe driving:

1. Always sit on the seat.
2. Always wear shoes.
3. Only 1 (one) rider at a time. A child who is not sitting on the seat or who is standing on the vehicle could fall off, cause a tip-over or block the driver's view. A child could be seriously injured.
4. Do not allow any child to drive the vehicle in the street or near moving (motorized) vehicles.
5. Do not allow any child to drive near bodies of water (such as pools or creeks), obstructions (such as furniture, low tree limbs or play equipment), or drop-offs (such as stairs or decks).
6. Do not allow any child to drive the vehicle in the dark. A child could encounter unexpected obstacles and have an accident. Operate the vehicle only in the daytime or a well-lit area.
7. Do not allow your child to drive on sloped or inclined surfaces. **Restrict your child's driving to generally level ground ONLY!**
8. Do not allow your child to drive down or across a steep slope.
   - The vehicle may gain unsafe speed, even if the pedal is released to stop.
   - The vehicle may tilt and tip over.
   - The wheels could lose traction, causing the vehicle to slip.
9. Do not allow your child to drive up steep inclines. The motor may stop and the vehicle could roll backwards at an unsafe speed.
10. Never put anything near any moving parts. Rotating parts such as motors, gear boxes and wheels can snag fingers, hair, etc., causing serious injury. Do not allow operation of the vehicle when it is on its side or in an upside-down position.
11. Do not operate the vehicle near flammable vapors (gasoline, paint thinner, acetone, liquid wax, etc.). The vehicle's electrical switches, like most electrical switches, emit an internal spark when first turned on or turned off. The presence of flammable liquids or vapors could cause an explosion or a fire. Keep all flammable products in tightly sealed containers and away from the vehicle.
12. Do not allow a child to operate the vehicle without direct adult supervision. To prevent unsupervised use of the vehicle, disconnect the motor harness from the battery when the vehicle is not in use.

How to Operate Your Vehicle

IMPORTANT! Use this vehicle **ONLY** outdoors. Most interior flooring can be damaged by riding this vehicle indoors. Fisher-Price® will not be responsible for damage to the floor if the vehicle is used indoors.

FORWARD

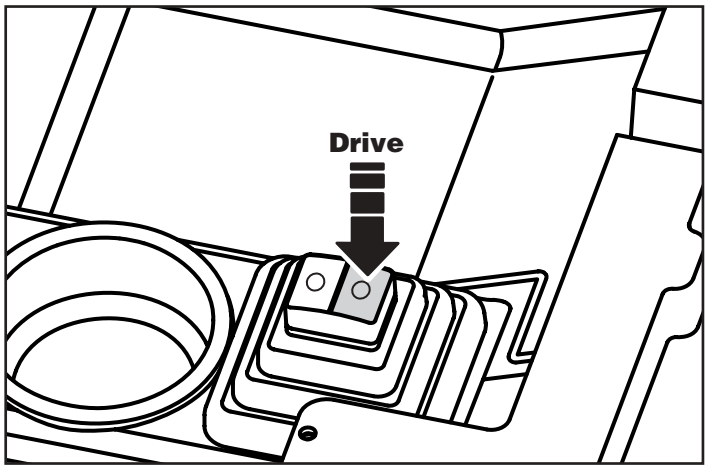

- Press the **FORWARD** button on the floor of the vehicle.
- Press the foot pedal. The vehicle drives forward at a maximum of 3½ mph.
- Help your child practice steering to learn how far and how quickly to turn the wheel when driving forward.

REVERSE

IMPORTANT! To prevent damaging the motors and gears, teach your child to **stop the vehicle before switching direction.** Never shift from forward to reverse, or from reverse to forward, without stopping.

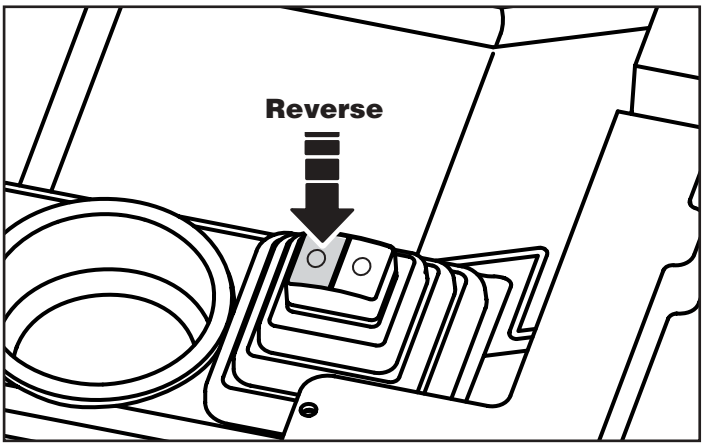

- Press the **REVERSE** button on the floor of the vehicle.
- Press the foot pedal. The vehicle backs-up at a maximum of 3½ mph.
- Help your child practice steering to learn how far and how quickly to turn the wheel when driving in reverse.

To Stop

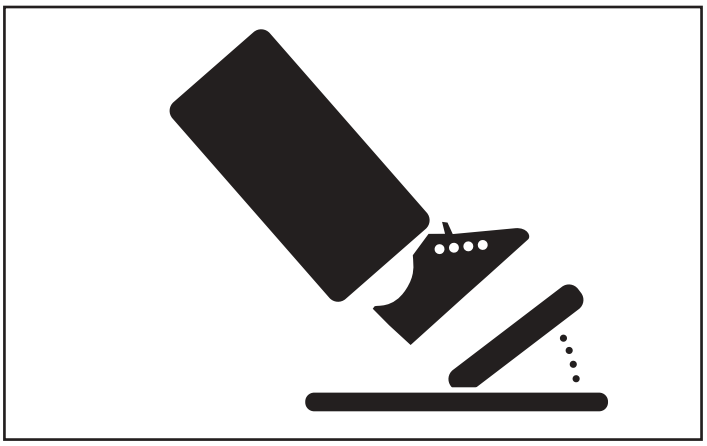

- Your vehicle has a patented, electronic braking system that automatically stops the vehicle when your child's foot is lifted from the pedal.
- Make sure your child is comfortable with steering the vehicle and automatically knows how to stop.

M

Bumper-to-Bumper* Limited Warranty

***One year limited warranty from the date of purchase on the Power Wheels® vehicle.**
Six month limited warranty on the 6 volt battery.

For the original purchaser, this one year limited warranty covers the Power Wheels® ride-on vehicle (purchased from Power Wheels®) against defects in materials and work-manship. The six month limited warranty applies only to the 6 volt battery included by Power Wheels® with the original purchase of the vehicle.

This warranty covers normal use and does not cover the Power Wheels® vehicle or battery if damaged by unreasonable use, neglect, accident, abuse, misuse, improper service or other causes not arising out of defects in materials or workmanship. Evidence of any attempt at consumer repair will void this warranty. THIS WARRANTY DOES NOT COVER, AND IS INTENDED TO EXCLUDE, ANY LIABILITY ON THE PART OF POWER WHEELS®, WHETHER UNDER THIS WARRANTY OR IMPLIED BY LAW FOR ANY INDIRECT OR CONSEQUENTIAL DAMAGES FOR BREACH OF WARRANTY. SOME STATES DO NOT ALLOW THE EXCLUSION OR LIMITATION SO THIS LIMITATION MAY NOT APPLY TO YOU.

Should you need service or assistance with your vehicle during the warranty period, **do not return the vehicle to the store**. Power Wheels® has provided a nationwide network of authorized service centers. Please refer to the list in this manual. Power Wheels® is continually expanding our Authorized Service Center Network. If there is not an authorized service center in your area, please call Consumer Relations for information, **1-800-348-0751**.

THIS WARRANTY GIVES YOU SPECIFIC LEGAL RIGHTS, AND YOU MAY ALSO HAVE OTHER RIGHTS WHICH MAY VARY FROM STATE TO STATE.

PLEASE SAVE YOUR ORIGINAL SALES RECEIPT.

N Problems and Solutions Guide

IMPORTANT! If you experience a problem with your vehicle, first check the Problems and Solutions Guide below. If you still experience a problem, please contact Power Wheels® Consumer Relations, toll-free at **1-800-348-0751** between 8 AM and 6 PM (EST) Monday through Friday. Or, contact your local Power Wheels® authorized service center. For the location nearest you, please refer to the Authorized Service Center list beginning on page 27, or register on-line at www.powerwheels.com.

Problem	Possible Cause	Solution
Vehicle does not run	Undercharged battery	Charge the battery. A new battery should have been charged for at least 18 hours before using the vehicle for the first time. After first-time use, recharge the battery for at least 14 hours after each use. Never charge the battery longer than 30 hours.
		Check all connectors. Make sure the battery connector is tightly plugged into the charger connector, and that the charger is plugged into the wall.
		Make sure power flow to the wall outlet is “ON”.
	Charger is not working	There is no sure way to tell if your charger is working unless you have a volt meter. If you suspect there is a problem with your charger, contact your local Power Wheels® authorized service center. They can test your charger for you.
	Tripped thermal fuse	The built-in thermal fuse may "trip" and shut down operation of the vehicle if the vehicle is overloaded or the driving conditions too severe. The fuse will automatically reset itself after approximately 25 seconds, allowing the vehicle to resume normal operation. To avoid repeated automatic shutdowns, do not overload the vehicle by exceeding the 65 lb maximum weight capacity or by towing anything behind the vehicle. Do not drive up hills or run into fixed objects, which can cause the wheels to stop spinning while power is still being supplied to the motors. If a thermal fuse continually trips, contact your local Power Wheels® authorized service center.
	Loose wire or loose connectors	Check all wires and connectors. Make sure the battery connector is tightly plugged into the motor harness connector and that there are no loose wires around the motors.
	Dead battery	If your battery is old or if you have not followed Battery Care instructions, your battery may be dead. If you are unsure whether or not the battery are dead, you can have it tested at your local Power Wheels® authorized service center.
	Electrical switch damage	The electrical switches can become corroded due to exposure to water or moisture, or can jam due to loose dirt, sand or gravel. Contact your local Power Wheels® authorized service center for diagnosis and repair.
	Motor damage	Contact your local Power Wheels® authorized service center for diagnosis and repair.

Problems and Solutions Guide

Problem	Possible Cause	Solution
Vehicle was running but suddenly stopped	Loose wire or loose connectors	Check all wires and connectors. Make sure the battery connector is tightly plugged into the motor harness connector, and that there are no loose wires around the motors.
	Tripped thermal fuse	The built-in thermal fuse may "trip" and shut down operation of the vehicle if the vehicle is overloaded or the driving conditions too severe. The fuse will automatically reset itself after approximately 25 seconds, allowing the vehicle to resume normal operation. To avoid repeated automatic shutdowns, do not overload the vehicle by exceeding the 65 lb maximum weight capacity or by towing anything behind the vehicle. Do not drive up hills or run into fixed objects, which can cause the wheels to stop spinning while power is still being supplied to the motors. If a thermal fuse continually trips, contact your local Power Wheels® authorized service center.
Short run time (Less than 1 - 3 hours per charge)	Undercharged battery	Charge the battery. A new battery should have been charged for at least 18 hours before using the vehicle for the first time. After first-time use, recharge the battery for at least 14 hours after each use. Never charge the battery longer than 30 hours.
		Check all wires and connectors. Make sure the battery connector is tightly plugged into the charger connector, and that the charger is plugged into the wall.
		Make sure power flow to the wall outlet is “ON”.
	Overcharged battery	Do not charge the battery longer than 30 hours. If you suspect that your battery is damaged as a result of overcharging, contact your local Power Wheels® authorized service center. They can test the battery for you.
	Battery is old and will not accept full charge	Even with proper care, a rechargeable battery does not last forever. Average battery life is 1 to 3 years depending on vehicle use and use conditions. Replace only with a Power Wheels® 6 Volt battery with A-style connector and built-in thermal fuse. **Do not substitute parts.**
	Tripped thermal fuse	The built-in thermal fuse may "trip" and shut down operation of the vehicle if the vehicle is overloaded or the driving conditions too severe. The fuse will automatically reset itself after approximately 25 seconds, allowing the vehicle to resume normal operation. To avoid repeated automatic shutdowns, do not overload the vehicle by exceeding the 65 lb maximum weight capacity or by towing anything behind the vehicle. Do not drive up hills or run into fixed objects, which can cause the wheels to stop spinning while power is still being supplied to the motors. If a thermal fuse continually trips, contact your local Power Wheels® authorized service center.
Vehicle runs sluggishly	Undercharged battery	Charge the battery. A new battery should have been charged for at least 18 hours before using the vehicle for the first time. After first-time use, recharge the battery for at least 14 hours after each use. Never charge the battery longer than 30 hours.
		Check all connectors. Make sure the battery connector is tightly plugged into the charger connector, and that the charger is plugged into the wall.
		Make sure power flow to the wall outlet is “ON”.

Problems and Solutions Guide

Problem	Possible Cause	Solution
Vehicle runs sluggishly (cont.)	Battery needs charging	Be sure to charge the battery after each use.
	Battery is old and will not accept accept full charge	Even with proper care, a rechargeable battery does not last forever. Average battery life is 1 to 3 years depending on vehicle use and use conditions. Replace only with a Power Wheels® 6 Volt battery with A-style connector and built-in thermal fuse. **Do not substitute parts.**
	Vehicle is overloaded	Make sure you do not overload the vehicle by allowing more than one rider at one time, exceeding the 65 lb. maximum weight capacity, or by towing objects behind the vehicle. If the vehicle is overloaded, the built-in thermal fuse in the battery may "trip", and automatically shut down operation of the for approximately 25 seconds. Adjust the driving conditions to prevent repeated automatic shutdowns.
	Driving conditions are too stressful	Use only on generally level ground.
Sometimes the vehicle doesn't run, but other times it does	Loose wire or connector	Check all wires around the motors and all connectors to make sure they are tight.
	Motor or electrical switch damage	Contact your local Power Wheels® authorized service center for diagnosis and repair.
When the foot pedal is pressed, the vehicle won't run without a push	Loose wire or connector	Check all wires around the motors and all connectors to make sure they are tight.
	"Dead Spot" on motor	Contact your local Power Wheels® authorized service center for diagnosis and repair.
Battery's thermal fuse constantly "trips", but the vehicle is not overloaded nor the driving conditions too severe	Damaged battery	Contact your local Power Wheels® authorized service center for diagnosis and repair.
	Child is switching between FORWARD and REVERSE without stopping	Teach your child to stop the vehicle before switching direction.
Loud clacking or grinding noise from a motor-gearbox	Broken gears	Contact your local Power Wheels® authorized service center for diagnosis and repair.
Charger gets warm during use	It is normal for some chargers to get warm during use and is not reason for concern. Some chargers do not get warm during use.	No action required.
		If your charger does not get warm during use, it does not mean that it is not working properly.
Battery makes a sizzling or gurgling noise when charging	It is normal for some batteries to make noise and swell slightly while charging and is not reason for concern.	No action required.
		If your battery does not make noise or swell slightly during charging, it does not mean that it is not accepting the charge.

If, after reviewing the Problems and Solutions Guide, the vehicle still fails to operate, please contact your nearest authorized service center (see page 27) or contact Power Wheels® Consumer Relations toll-free at **1-800-348-0751.**

O Authorized Service Centers

We are continually expanding our independently owned and operated Authorized Service Center Network. Please check this listing for the Authorized Service Center nearest you. If there is not one in your area, please call Power Wheels® Consumer Relations at 1-800-348-0751.

ALABAMA

BIRMINGHAM - Frigid Service & Sales, 701 Graymont Ave. North, 35203, (205) 323-5831

BIRMINGHAM - Frigid Service & Sales, 1861 Centerpoint Rd., 35215, (205) 853-3952

BIRMINGHAM (HOMEWOOD) - Frigid Appliance Center, 154 West Valley Ave., 35209, (205) 942-3959

DECATUR - Peddler II, 1000 B Beltline Road, 35603, (205) 350-1044

DOTHAN - Bill's Appliance Service, 208 Bic Road, P.O. Box 1192, 36303, (334) 792-7746

DOUGLAS - Brown Hardware, Highway 75, 35964, (205) 593-6086

HUNTSVILLE - C & G Appliance, 307 Jordan Lane, 35805, (205) 837-4551

MOBILE - Foster's Appliance Repair, 2610 Halls Mill Road, 36606, (251) 479-3567

NORTHPORT - Appliance Connection, 2703 McFarland Blvd, 35476, (205) 339-2774

TROY - Specialty Batteries, 1317 S. Brundidge St., P.O. Box 1045, 36081, (334) 670-6800

ALASKA

FAIRBANKS - Appliance Service Co. Inc., 700 23rd Ave., 99701, (907) 452-1000

ARIZONA

GLENDALE - Elliott Electric Appliance Service, 6242 N. 43rd Avenue, 85301, (623) 937-2613

SCOTTSDALE - Elliott Electric, 7515 E. McDowell Road, 85257, (480) 946-7487

ARKANSAS

FT. SMITH - Bromley Appliance Service, 614 North 10th Street, 72901, (501) 782-9646

GLENWOOD - Gardening Plus, 110 North 2nd Street, 71943, (870) 356-2233

JONESBORO - Best Sewing & Vacuum & Repair, 2235 S. Caraway Road, 72401, (501) 935-4739, (800) 844-4739

LITTLE ROCK - C & W Tool Repair, 1303 W. Markham, 72201, (501) 374-1911

ROGERS - Kressel's Vacuum & Repair, 115 North 5th Street, 72756, (479) 636-7894

STUTTGART - Davis Lumber Company, 301 East Michigan, 72160, (501) 673-3601

CALIFORNIA

BAKERSFIELD - Southwest TV, 6300 White Lane, Suite B, 93309, (805) 397-4940

CONCORD - CES Concord, 1170G Burnett Avenue, 94520, (925) 827-1011

COVINA - CES Covina, 612 S. Shoppers Lane, 91723, (626) 915-4935

ESCONDIDO - Mart's Appliance Service, 743 E. Valley Parkway, 92025, (760) 745-7711, (800) 313-7715

FORT JONES - Ft. Jones Frontier Hardware, 11911 Main Street, 96032, (916) 468-2266

FRESNO - Valley Small Appliance, 4005 E. Ashlan Avenue, 93726, (209) 224-5530

FULLERTON - CES Fullerton, 1208 East Ash Avenue, 92631-5020, (714) 870-0900

LAKE FOREST- California Electric Service, 22500 Muirlands Suite B, 92630, (949) 586-9440

LOS ALAMITOS - Folsom Electric, 11284 Los Alamitos Blvd., 90720, (562) 596-7895

SALINAS - SRS Hobbies, 407 Front Street, 93901, (831) 424-4044

SANTA ROSA - Hardisty's Inc., 1565 Farmers Lane, 95405, (707) 545-0535

SKY FOREST - Sky Forest Electrical, 28670 Highway 18, P.O. Box 496, 92385, (909) 337-0811

VENTURA - Appliance Advantage, 4547 Telephone Rd., Suite A, 93003, (805) 650-0716, (800) 960-2125

YUCAIPA - Aire-Rite Heating & A/C, 34724 Yucaipa Blvd., 92399, (909) 797-2788

COLORADO

COLORADO SPRINGS - Nelson Appliance Repair, Inc., 1220 E. Fillmore, 80907, (719) 635-1928, (800) 291-8010

DENVER - Appliance Service, 4272 Lowell Blvd., 80211, (303) 458-1109,

GRAND JUNCTION - V & L Appliance Service, 591 25 Road Suite A6, 81505, (970) 243-3360

PUEBLO - Direct Maytag Home Appliance, 1407 Santa Fe Drive, 81006, (719) 543-0777

CONNECTICUT

HARTFORD - Hartford Element & Appliance Service, 1500 Albany Ave., 06112, (860) 246-7424, (800) 787- 7977

NEW HAVEN (HAMDEN) - New Haven Appliance Service Center, 1627 Dixwell Ave., 06514, (203) 288-6229

SHELTON - Jeff's Appliance & Vacuums, 66 Center Street, 06484, (203) 924-8997

STAMFORD - Appliance Servicenter of Stamford, 15 Cedar Heights Road, 06905, (203) 322-7656

DELAWARE

WILMINGTON - Lyons Hardware, Inc., 2021 Kirkwood Highway, 19805, (302) 995-1260

SHELBYVILLE - Ahern & Sons Inc., #2 S. Dupont Hwy., RT #2, 19975, (302) 436-4100

FLORIDA

ATLANTIC BEACH - First Coast Repair, 25 Seminole Road, 32233, (904) 246-4616

BOYNTON BEACH - Discount Vacuum, 1865 W. Woolbright Road, 33425, (561) 243-9999

CALLAHAN -Arc Electronic Repair, 1844B South Kings Road, 32011, (904) 879-3556

CAPE CORAL - Family Hardware/Do-It Express, 622 SE 47th Terrace, 33904, (941) 542-6365

DELRAY - Mister Fix It, 209 S.E. 2nd Avenue, 33483, (561) 243-9999

GAINESVILLE - Authorized Appliance Service Co., 2614 S.W. 34th Street, 32608, (352) 375-3886

JACKSONVILLE - Authorized Appliance Service Co., 6120-5 Powers Avenue, 32217, (904) 737-5312

LAKECITY - S&S Mowers Inc., RT. 10, Box 35916, 32025, (904) 755-2957

LAKELAND - Electric Shaver & Small Appliance, 4243 S. Florida Avenue, 33813, (863) 644-4690

MIAMI - Goodman's Sales & Service, 13130 SW 128 Street #3, 33186, (305) 278-8822

NORTH PALM BEACH - Appliance Doctors, 450 Northlake Blvd., 33408, (407) 845-0377

OCALA - Vacuums Center and Gifts, 422 South Pine Street, #103, 34474, (352) 732-6335

ORLANDO - Southern Electric Co., 510 N. Parramore Avenue, 32801, (407) 841-8824, (800) 940-8824

PANAMA CITY - Callaway Vacuum & Sewing, 221 N. Tyndall Prkwy., 32404, (904) 763-6333

PENSACOLA - Foster's Appliance Repair, 3836 N. Davis Highway, 32503, (904) 432-8853

POMPANO BEACH - Authorized Appliance, 2171 N. Dixie Highway, 33060, (954) 941-2038

PORT ST. LUCIE - Appliance Doctors, 10632 South Federal Hwy, 34952, (561) 878-7869

SARASOTA - Sunray Small Appliances, 8371 N. Tamiami, 34243, (941) 358-9999, (800) 895-5655

SEBRING - Ace Hardware Of Sebring, 305 U.S. 27 North, 33870, (863) 385-2735

SPRING HILL - Ace Hardware #5304F, 5350 Spring Hill Dr., 34606, (352) 686-4743

SPRING HILL - National Floor Care, 5588 Commercial Way, 34606, (352) 686-6711, (800) 245-1946

ST. PETERSBURG - Keystone Electric, 4604 Central Avenue, 33711, (813) 321-1124

STUART - Appliance Doctors, 3166 S.E. Dixie Highway, 34997, (561) 287-6437

SUNRISE - Muller Appliance Service, 2116 North University Drive, 33322, (954) 749-5460

TALLAHASSEE - Dougs Vacuum Center, 604 N. Bronough Street, 32301, (850) 222-1423

VERO BEACH - Hoppe's Authorized Vacuum and Appliance, 1872 Commerce Ave., 32960, (561) 562-4466

WEST PALM BEACH - Satisfaction TV Video, 1980 South Congress Ave., 33406, (561) 439-3733, (800) 477-3734

WILLISTON - Future Electronics, 10 SW 7th Street, 32696, (352) 528-5599, (800) 416-1114

GEORGIA

BRUNSWICK - Arco Hardware & Supply, 3711 Community Road, 31520, (912) 267-0771

COLUMBUS - Burrell's National Appliance Service, 1728 Warm Springs Road, 31904, (706) 327-0523

NORCROSS - Appliance Connection, 5172-C Brook Hollow Parkway, 30071, (770) 734-9888, (800) 964-7455

GAINESVILLE - Bike Town USA, 1604 Dawsonville Highway, 30501, (770) 532-7090

SAVANNAH - Hagins Appliance Service, 3 West Victory Drive, 31405, (912) 233-8372

THOMASVILLE - Carroll Hill Auto, 115 Albany Road, 31799, (229) 266-0717

VALDOSTA- Harry B. Anderson, Inc., 204 E. Central Avenue, 31601, (229) 242-5945

WOODSTOCK - All City Appliance Inc., 8477 Highway 92 Suite 110, 30189, (770) 924-2375

HAWAII

HONOLULU - McCully Bicycle & Sporting Goods, 932 Hausten Street, 96826, (808) 946-1192

WAILUKU (MAUI) - Tom's Appliance Sales & Service, 1816 Mill Street, Suite 104, 96793, (808) 244-6278

WAIPAHU - Gary's Bike World, 94-910 Moloalo Street, 96797, (808) 375-4262

IDAHO

BOISE - Boise Appliance, 7539 W. Mossy Cup Street, 83709, (208) 343-0102

IDAHO FALLS - Rossiter Electric, 1501 South Capital Avenue, 83402, (208) 529-3665

ILLINOIS

CHICAGO (BERWYN) - Brand Service Center, 6739 West Cermak, 60402, (708) 749-4315

CHICAGO (DOWNER'S GROVE) - Authorized Appliance Service Co., 1644 W. Ogden Avenue, 60515, (630) 852-1550

CHICAGO (MORTON GROVE) - Brand Service Center, Inc., 5618 Dempster Street, 60053, (847) 965-5900

DECATUR - Rexx Battery of Decatur, Inc., 1330 East Eldorado, 62521, (217) 422-0281

EAST DUNDEE - R & R Small Engine Repair, 305 Johnston Street, 60118, (874) 428-0023

FAIRVIEW HEIGHTS - Rapid Rentals, 720 Lincoln Highway, 62087, (618) 632-0630

GRANITE - Midwest Golf Car & Equipment Co., 904 Thorngate Road, 62040, (618) 797-2278

HAMILTON - Discount Battery Sales, #80 S 2nd Rte. 136, 62341, (217) 847-3242

JACKSONVILLE - Rexx Battery Specialists, 847 South Main Street, 62650, (217) 245-2713

LINCOLN - Rexx Battery Specialists, 504 Keokuk, 62656, (217) 732-2885

MT. VERNON - Battery Specialists, 1018 South 10th Street, 62864, (618) 244-0091

NASHVILLE - Kesel Hardware, 173 West St. Louis, 62263, (618) 327-8957

NILES - Household Appliance Sales & Serv., 7411 N. Milwaukee Ave., 60714, (847) 647-8250

SPRINGFIELD - Bannon Electronics, 1224 N. Franklin, 62702, (217) 523-0313

TAYLORVILLE - Battery Specialists + Golf Cars, 800 Springfield Road, 62568, (217) 824-3943

INDIANA

EVANSVILLE - Electro Hygiene Co., 1614 S Kentucky, 47714, (812) 425-2671

FT. WAYNE - Southside Vacuum Co. Inc., 3702 South Calhoun Street, 46807, (260) 745-7788, (888) 209-8113

Authorized Service Centers

INDIANAPOLIS - Brand Service Center, 1827 N. Meridian Street, 46202, (317) 924-1386

INDIANAPOLIS - Sullivan Hardware Do-It Center, 7021 N. Keystone, 46220, (317) 255-9230

NEW ALBANY - Wells Hardware, Inc., 1011 Vincennes Street, 47150, (812) 944-4523

SOUTH BEND (OSCEOLA) - AAA Appliance Service Co., 11868 Lincoln Way West, 46561, (574) 679-4981

TERRE HAUTE - Corey Electronics, 1101 S. 8th Street, 47802, (812) 232-8786, (888) 232-8786

IOWA

BETTENDORF - K & K True Value Hardware, 1818 Grant Street, 52722, (563) 359-4473

CEDAR RAPIDS - Stalker Electric, Inc., 110 3rd Ave. SW, 52404, (319) 364-5646

COUNCIL BLUFFS - Millard Television Inc., 1840 Madison Avenue, 51501, (712) 322-9552

DES MOINES - Quality Appliance Repair Center, 1417 Walnut Street, 50309, (515) 288-0108

DUBUQUE - Shaver's Plus, 450 Central Avenue, 52001, (319) 556-4442

FT DODGE - Messerly Electronics, 614 1st Avenue South, 50501, (515) 576-4480

GRINNELL - Bikes To You Inc., 921 Broad Street, 50112, (515) 236-8600

MARSHALLTOWN - Blink Electric Motors, Inc., Rear 116 N 1st Avenue, 50158, (641) 752-3036

NORTH LIBERTY - Ace Electric, Inc., 165 Hwy 965 NE, 52317, (319) 626-3007, (800) 326-3007

SIOUX CITY - Millard Television Inc., 1419 Hamilton Blvd., 51103, (712) 258-3435

KANSAS

CHANUTE - Zimmerman Electric Service, 1202 West Beech, P.O. Box 533, 67720, (620) 431-2260, (800) 362-0909

COLBY - Gavon's Electronics, 1870 South Range, 67701, (913) 462-6601

JUNCTION CITY - R/C Hobbies, 115 W. 7th Street, 66441, (913) 238-1877

KANSAS CITY (OVERLAND PARK) - Mar-Beck Appliance Service Co., 8471 West 95th Street, 66212, (913) 642-1557

SPEARVILLE - Quality Parts, P.O. Box 126, 406 North Main, 67876, (316) 385-2624

WICHITA - Alan Appliance Service, Inc., 1300 E. Central, 67214, (316) 262-7228, (800) 290-7228

KENTUCKY

GREENVILLE – Malone Lumber Do-It Center, 204 W. Depot Street, 42345, (270) 338-3252

LEXINGTON - AutoHobby Model Raceway, 1474 Anniston Drive, 40505, (859) 299-4925

LOUISVILLE - Maury's Fluorescent & Appliance Service, 1521 Bardstown Road, 40205, (502) 456-1671

OWENSBORO - Kuester's Hardware, 1210 Carter Road, 42301, (270) 685-4916

PADUCAH - Hank Brothers True Value, 3101 Lone Oak Rd., 42003, (270) 554-4001

LOUISIANA

BAKER - Gayle Battery Distributors, 16555 Plank Road, 70714, (225) 774-7475

BATON ROUGE - Home Appliance Service, Inc., 10781 Florida Blvd., 70815, (504) 272-7727

COVINGTON - Battery World LLC, 1601 N. Hwy 190 Suite A, 70433, (985) 809-9300

HAMMOND - Battery Depot, 2323 Hwy 190 East Suite #4, 70401, (985) 542-4952

LAFAYETTE - Cullen's Playland, 4498 Johnston Street, 70503, (337) 981-2929

LAKE CHARLES - Capitol Schwinn Cyclery, 722 E. Prien Lake Road, 70605, (337) 474-9090

NEW ORLEANS (METAIRIE) - Le Jouet, Inc., 1700 Airline Hwy., 70001, (504) 837-0533

SHREVEPORT - Shreveport Shaver and Appliance, 9750 St. Vincent, Burt Kouns Ind. Loop, 71106, (318) 865-5088, (800) 349-7722

MAINE

GREENE -MAC (Maine Accessibility Corp), 87-89 Hillside Avenue, 04401, (207) 947-2357

GREENE - Brule's Auto Clinic & Sales, 968 Sawyer Road, 04236, (207) 375-4872

PERU - Mountain Valley Sports, 58 Ridge Road, 04290, (207) 562-7164

PORTLAND - Colonial Electronics, Inc., 259 St. John Street, 04102, (207) 774-6666

MARYLAND

ABERDEEN - Burkheimer Garden Equipment, 651 Gilbert Road, 21001, (410) 734-4577

BALTIMORE - Colgate Hardware, 6711 Holabird Ave., 21222, (410) 633-6363

BERLIN - Myers Auto-Power Tool Rental Co., Inc., 10714 Ocean Gateway, 21811, (410) 641-3497

GAITHERSBURG - Waters Appliance Service, 216 E. Diamond Avenue, 20877, (301) 258-7500, (800) 225-5009

GLEN BURNIE - Taylor Rental, 7389 Baltimore Annapolis Blvd., 21061, (410) 768-1933, (800) 836-8464

LOVEVILLE - Hancock Refrigeration Co Inc., 28650 Point Lookout Rd, 20656, (301) 475-8298

MASSACHUSETTS

BOSTON (MEDFIELD) - Wills Hardware, 5 Janes Avenue, 02052, (508) 359-4381

LOWELL - Lowell Appliance Service Center, Inc., 564 Dutton Street, 01854, (508) 454-8731

MAYNARD - Gramp's Garage, 16 Main Street, 01754, (508) 461-0463

NEEDHAM - Suburban Applicance Service Center, 34 Wexford Street, 02492, (781) 449-8787

QUINCY - Appliance Service and Parts, Inc., 582 Washington Street, Rt. 3A, 02169, (617) 773-6656

SALEM - Fix Master, Inc., 190 North Street, 01970, (508) 745-0004

SPRINGFIELD - Utility Electric Service, Inc., 810 Main Street, 01101, (413) 781-1635

MICHIGAN

ALMA - JTS Electronics, LLC, 306 East Center Street, 48801, (989) 463-5871

ALMONT - Almont Do It Center #5336, 4545 Vandyke, 48003, (810) 798-8922

BAY CITY - Bay Vac & Pedal, 805 Columbus Ave., 48708, (989) 892-7516

BRIGHTON - Complete Battery Source, 8023 W. Grand River, 48116, (810) 220-1050

DEARBORN - McNichols Electric Service, 1836 Grindley Park, 48124, (313) 563-7550

DETROIT - McNichols Electric Service, 13725 W. McNichols, 48235, (313) 342-6070, (800) 562-4226

DETROIT (ROYAL OAK) - McNichols Electric Service, 4115 West 13 Mile Road, 48072, (810) 288-5135

FLINT (DAVISON) - Gill-Roy's Hardware, 8405 E Davison, 48423, (810) 653-2288

FLINT (SWARTZ CREEK) - Gill-Roy's Hardware, 9061 Miller Road, 48473, (810) 635-2020

GAYLORD - Alpine Electronics, 604 West Main, 49735, (989) 732-5004, (800) 244-6633

GRAND RAPIDS - Superior Appliance Service Co., 1050 Scribner Avenue, NW, 49504, (616) 459-3271

HOLLAND - A-1 Used Mowers, 96 Howard Avenue, 49424, (616) 396-0002

JACKSON - Hammond Hardware, 1800 Francis St., P.O. Box 7, 49204, (517) 782-0704

LANSING - Rapid Appliance Service, 1606 E. Michigan Avenue, 48912, (517) 485-1320

MARLETTE - Thumb Appliance and Retail Center, 3441 Main Street, 49684, (989) 635-7848

MIDLAND - Gill-Roy's Complete Hardware, 3128 Jefferson Ave., 48640, (989) 832-2774

PAW PAW - Electronic Care Inc., 238 E. Michigan Avenue, 49079, (616) 657-2129

PRUDENVILLE - Ford's Do-It Center, 841 W. Houghton Lake Drive, 48651, (517) 366-7622

ROYAL OAK- McNichols Electric Service, 4115 Thirteen Mile Road, 48072, (248) 288-5135

TRAVERSE CITY- Gil-Roy's Hardware, 2701 Zimmerman Road, 49684, (231) 929-8160

MINNESOTA

BLAINE - Barness #1, 8701 Central Ave. NE, 55434, (763) 780-7229

BRAINERD - Git A'Round, 4299 Hwy. 371 North, 56401, (218) 828-8088

DULUTH - All Brand Mr. Fixit, 16 West First Street, 55802, (218)-722-1499

SAUK CENTRE - T & M Electric, 625 Lincoln Loop, 56378, (320) 352-6839

ST. PAUL - Barness, 1573 University Avenue, 55104, (612) 646-3109

MISSISSIPPI

HATTIESBURG - Champion Cycle & Fitness, 2625 Lincoln Road, 39402, (601) 310-0270

IUKA - W. H. Fairless Hardware Co., Inc., 117 Fulton Street, 38852, (662) 423-9256, (800) 797-9457

JACKSON (RIDGELAND) - Propeller Service, 291 Hwy. 51, Suite D6, 39157, (601) 856-3191

LONG BEACH - Walker Rent All & Hardware 19079 Pineville Road, 39560, (228) 864-0864

SALTILLO - Polaris Outdoor World, 3463 Tom Watson Drive, 38866, (662) 680-4733

STARKVILLE - East Mississippi Lumber Co., 300 Russell Street, 39759, (662) 323-3554

MISSOURI

GLADSTONE - Mar-Beck Appliance Service Co., 6559 North Oak Traffic Way, 64118, (816) 436-9191

INDEPENDENCE - Mar-Beck Appliance Service Co., 4476 South Noland Road, 64055, (816) 478-1889

KANSAS CITY - Mar-Beck Appliance Service Co., 303 W. 79th Street, 64114, (816) 523-6931

POPLAR BLUFF - Mills Iron & Supply, 1919 S. Westwood Blvd., 63901, (573) 785-2628

ST. LOUIS - Authorized Appliance, Inc., 2355 Hampton Avenue, 63139, (314) 647-4250

MONTANA

BILLINGS - Radio Equipment Company, 1120 16th Street West, 59104, (406) 256-9778, (800) 711-4024

NEBRASKA

GRAND ISLAND - Mundt's Small Appliance & Vacuum Repair, 1822 W. Northfront Street, 68803, (308) 382-5084

LINCOLN - CB Small Appliance, 432 South 11th Street, 68508, (402) 475-2546

LINCOLN - Sperry TV, 1115 North 47th St., 68503, (402) 464-9181

NORTH PLATTE - Sperry TV, 1855 West A Street, Westfield Shopping Center, 69010, (308) 532-5200

OMAHA - Myers Electric Co., 7342 Farnam, 68114, (402) 393-8388, (800) 234-1414

NEVADA

LAS VEGAS - Burney's Commercial Service, Inc., 4480 Aldebaran Avennue, 89103, (702) 736-0006

MINDEN - Valley Home & Sport Center, 1587 Highway 395, 89423, (775) 782-5111

NEW HAMPSHIRE

MARLBOROUGH- Electronics Aid Inc., 32 Roxbury Road P.O. Box 325, 03455, (603) 876-4161

NEW JERSEY

DENVILLE - Ranft's Denville Vacuum & Appliance, 12 Broadway, 07834, (973) 627-1156

HAWTHORNE - Ter Kuile, Inc., 206 Diamond Bridge Avenue, 07506, (201) 423-1142

HIGHLAND PARK - Dash Electronics, 10 North Second Ave, 08904, (732) 247-2495

HOWELL - South Jersey TV Service, Inc., 4232 Rt. 9 South, 07731, (908) 363-5550, (800) 244-3094

SOUTHAMPTON - Southampton Auto Center, 1831 Rt. 206, 08088, (609) 859-3987, (609) 859-3341

SICKLERVILLE - Sicklerville Hardware, 540 Williamstown Road, 08081, (856) 728-3800

TOMS RIVER - South Jersey TV Service, Inc., Stella Towne Center, 1258 Rt. 166, 08753, (908) 505-1771

TRENTON - Tattersall, Inc., 309 N. Willow Street, 08618, (609) 393-4293

NEW MEXICO

ALBUQUERQUE - Appliance Service Center, 3219 Candelaria, NE, 87107, (505) 265-7774

CLOVIS - Burns Hardware, 1511 N. Prince, 88101, (505) 769-2528

NEW YORK

ALBANY - Lake Electronic Service, 1650 Central Avenue, 12205, (518) 869-8424, (800) 585-3777

BAYSHORE, L.I. - Turnpike Appliance of Suffolk, Inc., 1253 Sunrise Highway, 11706, (631) 665-8311

BRONX - Home Appliance Vacuum Word, 5902 Riverdale Avenue, 10471, (718) 884-4600

Authorized Service Centers

BUFFALO (WILLIAMSVILLE) - Hector's Hardware, 876 Maple Road, 14221, (716) 688-4488

BUFFALO (HAMBURG) - K-Technologies, 5424 Abel Road, 14075, (716) 649-5460

COMMACK, L.I. - Turnpike Appliance Service, 6181 Jericho Turnpike, 11725, (631) 499-3355

EAST AURORA - Sem-Fab of Western New York, 150 Elm Street, 14052, (716) 655-5228

ELMIRA - Capabilities, Inc., 1149 Sullivan Street, 14901, (607) 734-2006

HAMBURG - The Battery Post Inc., 4109 St. Francis Drive, 14075, (716) 824-1987

HOWARD BEACH- Crossbay Appliance Service, 158-34 Crossbay Blvd, 11414, (718) 843-4422

HUDSON - Sweeps Vacuum & Repair Center, Inc., 705 Warren Street, 12534, (518) 828-5457

MONTICELLO - Wayne's Small Engine, 66 St. John Street, 12701, (845) 796-1851

OCEANSIDE - Turnpike Appliance Service, 3495A Lawson Boulevard , 11572, (516) 486-5700

POUGHKEEPSIE - S & S Appliance Sales & Service, 420 Violet Avenue, 12601, (845) 452-6122

RICHMOND HILL - Lockdoctor Locksmiths, 104-37 Atlantic Ave., 11418 (718) 441-6242

ROCHESTER - Benfante Appliance Service, 1286 Mt. Hope Avenue, 14620, (585) 473-8765

SYRACUSE - County Wide Appliance, 1001 N. State Street, 13208, (315) 479-5253, (877) 479-5253

TUCKAHOE - Authorized Appliance of Westchester, 26 Columbus Ave., 10707, (914) 961-8011

WARWICK - Wadeson Home Center, 60 Forester Ave., 10990, (845) 987-2215, (800) 982-2215 (NY only)

YORKVILLE - Yorkville Battery Inc., 126 Whitesboro Street, 13495, (315) 736-2307

NORTH CAROLINA

ANDREWS - Smoky Mountain Hobbies, 13956 US 19 White's Plaza, 28901, (828) 321-9836

ASHEVILLE - Skyland Hardware, 3179 Sweeten Creek Road, 28803, (704) 684-0308

CHARLOTTE - Authorized Appliance Servicenter, 1020 Tuckaseegee Road, 28208, (704) 377-4501, (800) 532-6127

CLINTON - Danny's Service Center, 119 Vance Street, 28328, (910) 592-3200

ELIZABETH CITY - Coastal Office Equipment Co., 501 East Church Street, 27909, (919) 335-2927

GREENSBORO - Little Creek Electronics, 3310 N. Church Street, 27406, (336) 375-9890, (877) 446-7144

HICKORY- Power Tool & Electric Equipment, 442 Highland Avenue S.E, 28602, (828) 327-8400

JACKSONVILLE- Discount Sales and Service, 468-B Western Blvd., 28456, (910) 455-6700

WINSTON-SALEM - Authorized Appliance Service Center, 904 S. Marshall Street, 27117, (910) 725-5396

NORTH DAKOTA

BISMARCK - Guitarland, 210 E Main Street, 58501, (701) 255-0212

DICKINSON - Fix It Shop, 316 21st Street E., 58601, (800) 871-0766

FARGO - General Parts & Supply Co.,10 S. 18th St, 58103, (701) 235-4161, (800) 279-9987

OHIO

AKRON - Advanced Appliance Service Company, 73 W. Exchange Street, 44308, (330) 762-8968

CANTON - Appliance Parts Co., 1267 Dueber Avenue, SW, 44706, (330) 453-8077

CINCINNATI - H&S Service, 458 Cincinnati Batavia Pike, 45244, (513) 528-0808

CLEVELAND (MENTOR) - Lake Erie Lawn & Garden, 7833 Munson Rd., 44060, (216) 257-9000

CLEVELAND (PARMA) - Majors Appliance, 5785 Ridge Road, 44129, (216) 884-7200

CLEVELAND (WESTLAKE) - Philips Consumer Electronics, 24090 Detroit Avenue, 44145, (216) 899-2040, (800) 331-7037

DAYTON - Layer Electric, 603 South Ludlow Street, 45402, (937) 224-9608

DAYTON (NEW CARLISLE) - Ballweg Do-It Center, 3300 South Dayton, Lakeview Rd., 45344, (937) 849-1306

GALION - Allied Electrical Repair, 1404 Harding Way East, 44833, (419) 468-4962, (800) 648-6771

GROVE CITY - City Bike Repair, 3957 Broadway, 43123, (614) 871-9123

LIMA - Crouse Lumber Do-It Center, 333 E. Market Street, 45801, (419) 229-9070, (800) 826-9663

MANSFIELD - Boliantz Hardware, 860 Ashland Road, 44905, (419) 589-5467

PORTSMOUTH - Market St Hardware & Toy Town, 217 Market Street, 45662, (740) 456-5704

TOLEDO - Mr. Appliance of Toledo Inc., 1621 Broadway, 43609, (419) 241-9731, (800) 436-5415

WELLINGTON - Travelite Inc., 750 Industrial Avenue, P.O. Box 98, 44090, (440) 647-3670, (800) 326-0406

YOUNGSTOWN - O'Connor's, 3224 Market Street, 44507, (330) 782-4705

ZANESVILLE - Batteries Unlimited, 2350 Adamsville Road, 43701, (740) 453-3311

OKLAHOMA

OKLAHOMA CITY - Appliance Services by CK, 101 East Madison, 73105, (405) 525-8862

OKLAHOMA CITY - Oaklahoma Service Center, 1940 North May Street, 73107, (405) 946-9841

TULSA - H.L. Moss, Inc., 1714 E. 15th Street, 74104, (918) 744-1305, (800) 248-5948

OREGON

PORTLAND - Appliance Repair Central, 2033 N. E. Columbia Blvd, 97211, (503) 285-1828, (800) 588-7339

PENNSYLVANIA

ALTOONA - Frye's Sweeper & Sewing Center, Inc., 1400 Valley View Boulevard, 16602, (814) 943-5001, (800) 640-1308

BUTLER - Battery Warehouse, 469 Cunningham Street, 16001, (724) 287-3191

CRANBERRY - Batteries Plus North, Cranberry Towne Plaza 20808 Route 19, 16066, (724) 742-1690

ERIE - Parke T. Morrow Inc., 627 West 26th Street, 16508, (814) 455-7566

GRAPEVILLE - Jiffy Service, 12 Fourth Street, 15634, (724) 523-5585

GROVE CITY - Battery Warehouse, 620 East Main Street, 16127, (724) 458-1655

HARRISBURG - C.A. Juillard, Inc., 2301 North Seventh Street, 17110, (717) 233-3488, (800) 633-3488

JOHNSTOWN - Cambria Hardware, West Hills Square, 1765 Goucher Street, 15905, (814) 255-4752

KINGSTON - Vac-Way Appliance & Service, 595 Market Street, 18704, (570) 288-4508

LANCASTER - Colonial Electronics Inc., 241 West Roseville Suite #2t, 17601, (717) 560-2222

McDONALD - Small Engine World, 130 East O'Hara Street, 15057 (724) 926-3330

MOSCOW - Vac-Way Appliance & Service, RR #6 Box 6237, 18444, (570) 842-4668

ORANGEVILLE - Hess Do-It Center & Market, Route 487, Box 4 M, 17859, (570) 683-5162

PHILADELPHIA - Appliance Care/Service Corp., 6407 Rising Sun Ave., 19111, (215) 725-3112

PHILADELPHIA (COLLINGDALE) - J.F. Kenney Electric, 308 Mac Dade Blvd, 19023, (610) 534-7373

PITTSBURGH - Batteries Plus North, 4808 McKnight Road, 15237, (412) 366-3600

READING - Electric Repair Co., 502-504 N. 9th Street, 19604, (610) 376-5444, (800) 422-8171 (PA only)

SCRANTON - Vac-Way Appliance and Service, 601 Cedar Avenue, 18505, (570) 343-1121

SHAMOKIN DAM - Willard Battery Outlet, 138 S. Old Trail, 17876, (570) 743-5383

SHIPPENVILLE - Battery Warehouse, 11041 Rt 322 Riverhill, 16254, (814) 227-2123

TROY - Hoover Hardware, 9 Canton, 16947, (800) 251-2156, (570) 297-3445

WILKES-BARRE - Walter Hardware DO-IT Center, 57 N. Welles Street, 18702, (570) 823-1406

PUERTO RICO

MAYAGUEZ - Cardona Appliance Service, 8 San Vicente Street, 00680, (787) 832-8366

MAYAGUEZ - AAA Melendez Rental, Calle Post 319 Sur, 00680, (787) 832-5225

PONCE - Ferreteria Vivian, Centro Comercial, Los Caobos #7, 00731, (787) 840-0677

PUERTO NUEVO - Buckeye Service, 1013 Jesus T. Pinero Avenue, 00920, (787) 782-6175

SOUTH CAROLINA

AIKEN - Dunagan's Sewing & Vacuum, 2160 University Parkway, 29801, (803) 648-4837

BELTON - American Pro Office Equipment, 309 Forest Lane, 29627, (864) 338-9041

CHARLESTON HEIGHTS - Dorchester Electric Service, 3575 Dorchester Avenue, 29405, (803) 747-5221

COLUMBIA - Authorized Appliance Servicenter, 1811 Taylor Street, 29202, (803) 254-8414

DARLINGTON - Hobbies and More, 1570 South Main Street, 29532, (803) 393-0355, FAX (803) 393-8171

EASLEY - Trails End Bicycles, 110 Pendleton Street, 29640, (864) 306-1684

FORT MILL - Service Engines & Supply, Inc., 3023 Highway 21, 29715, (803) 548-1778, (800) 845-1191

GREENWOOD - Bikes & Boards & Mopeds, 203A Montague Avenue, 29646, (864) 229-2453

SENECA - Seneca Micronics, 110 East North First, 29678, (864) 882-6593

SPARTANBURG - Jones Electronic Services, 9104 Greenville Hwy, 29301, (864) 576-0482, (800) 677-0482

SOUTH DAKOTA

WINNER - Nelson's Electronics Inc., 422 West 2nd Street P.O. Box 369, 57580, (605) 842-1611, (888) 842-1699

TENNESSEE

CHATTANOOGA - Consumer Service Company, 2607 E 47th Street, 37407, (423) 867-8629

DANDRIDGE - Save More Sales, 1291 W Hwy. 25-70, 37725, (865) 397-1255

KNOXVILLE - Appliance & Electric Service Company, 3613 Sutherland Avenue, 37919, (865) 588-5395, (800) 585-5395

KNOXVILLE - Authorized Appliance Service Center, 1206 North Central Street, 37917, (865) 524-3376

MEMPHIS - Camp Electric Co., 647 Madison Avenue, 38103, (901) 527-7543, (800) 238-7345

NASHVILLE - Webb's Appliance Service Center, Inc., 1519 Church Street, 37203, (615) 329-4079, (800) 899-4079

PINEY FLATS - Appalachian Small Engines, 6192 Hwy 11E, 37686, (423) 391-0185, (800) 219-8810

TEXAS

AMARILLO - Reid's Appliance Service, Inc., 906 Georgia, 79102, (806) 373-8812

CORPUS CHRISTI - Brand Appliance & Microwave, 2751 South Staples, 78404, (361) 854-1851

DALLAS - All Type Sales and Service Co., Inc., 2835 Irving Blvd., 75207, (214) 638-1170, (800) 717-1170

DALLAS - Pearsol Appliance Co., 3127 Main Street, 75226, (214) 939-0930

FT. WORTH - Ft. Worth Shaver and Appliance Center, 1900 Montgomery Street, 76107, (817) 335-9970, (800) 816-2126

HOUSTON - Brand Service Center, 5727 Richmond Avenue, 77057, (713) 782-8910

KERRVILLE - Lopez Electric, 425 McFarland Drive, 78028, (830) 896-1171, (888) 520-6415

KILLEEN - Master Tech Repairs, 501 West Elms Road Suite #10, 76542, (254) 618-5480

LONGVIEW - Foster's, 3315 Gilmer Road, 75604, (903) 759-3939

LUBBOCK - Minter's, 4409 50th Street, 79414, (806) 799-3170

LUFKIN - STS Audio and Video, 1505 South First Street, 75901, (936) 639-4529

MC ALLEN - All-In-One Repair Shop, 2313 Lark Avenue, 78504, (210) 682-8858

MIDLAND - Midland Tool Specialty, 918 South Main, 79701, (915) 682-4647, (800) 499-0755

PASADENA - Larry's TV Service, 3520 Fairmont Parkway, 77504, (713) 998-0122

ROMA - True Value Hardware, 1004 E. Highway 83, (210) 849-1322

Authorized Service Centers

SAN ANTONIO - Texas Shaver & Appliances, 8121 Callaghan Road, 78230, (210) 344-8577

TEMPLE - Master Tech Repairs, 2819 West Avenue North, 76504, (817) 773-8991

WICHITA FALLS - Allens Appliance Service, 2403 10th Street, 76309, (940) 766-2635

UTAH

OREM - The Mending Shed, 1735 South State Street, 84058, (801) 225-8012, (800) 339-9297

SALT LAKE CITY - Appliance Service Center, Inc., 1475 South Main, 84115, (801) 467-6361, (800) 377-8020

WILLARD - Peak Electric Co Inc, 780 N 200 W, 84340, (435) 723-7104

VIRGINIA

ALEXANDRIA - D & S Repair Service, 20 South Dove Street., 22314 (703) 683-0009

FREDERICKSBURG - Fredericksburg Electrical Repair, Inc., 10825-D Houser Drive, 22408, (540) 891-7911

HAMPTON - Commonwealth Electric Shavers, 18 W. Mercury Blvd., 23669, (757) 722-0745

HARRISONBURG (PENN LAIRD) - J.L. Maintenance & Repair, Inc., Rt 2, Box 308, 22846, (540) 289-9844

LOUISA - Lakeside Electric Const., 4344 Davis Highway Suite 2, 23093, (540) 967-3000

RICHMOND - Wells Inc., 3502 Jefferson Davis Highway, 23234, (804) 233-6726

ROANOKE - Commonwealth Shaver & Appliance Service, 5524 Williamson Road, NW, 24012, (540) 366-6038

VIRGINIA BEACH - Commonwealth Electric Shaver, 549 Newton Road #108, 23462, (757) 490-0500

WINCHESTER - Battery Mart of Winchester, Inc., 1 Battery Dr., 22601, (703) 655-0065

WASHINGTON

ARLINGTON - Cordz Limited, 6516 211th Avenue, 98223, (360) 435-2471

KENNEWICK - At Home Electronic Services Inc., 313 East First Avenue, 99336, (509) 586-3800

SEATTLE - Action Small Appliance, 2125 2nd Avenue, 98121, (206) 448-2020

SEATTLE (BELLEVUE) - Action Small Appliance Service, 1500 145th Place, SE, 98007, (206) 643-9806

SPOKANE - Aalwaco Appliance, N 3007 Argonne Road, 99212, (509) 487-1089

WEST VIRGINIA

BECKLEY - Jerry's Detectors, Vacuum & Appl. Svc., 411 Second Street. 25801, (304) 253-3521

CHARLESTON - Sneed's Vacuum & Sewing Center, 2614 7th Avenue, 25312, (304) 744-3670, (800) 245-8048 (WV only)

HUNTINGTON - Mike's Appliance and Service, 212 20th Street, 25703, (304) 522-0737

MARTINSBURG - Battery Mart, 1494 Winchester Avenue, 25401, (304) 267-7033

VIENNA - T & S Lawn - Landscape & Power Equipment, 1100 10th Street, 26105, (304) 295-7633 (800) 559-7633

WHEELING - Fast Service Center, 1058 Main Street, 26003, (304) 232-5561 (800) 874-4090

WISCONSIN

ELK MOUND - Epp Electronics, E9485-A County Road EE, 54739, (715) 879-4634

GREENBAY - Kastle Carts, Inc., 2301 N. Irwin Ave., 54313, (414) 465-6121

LACROSSE - Paul's Shaver Service, 1224 Caledonia Street, 54603, (608) 782-6291

MILWAUKEE - Abby Electronics, 4295 S. 20th Street, 53221, (414) 281-6602

MILWAUKEE - Brand Appliance Repair, Inc., 6601 W Oklahoma Avenue, 53219, (414) 541-4340

MONONA - Kiefers Shaver & Appliance, 4511 Monona Drive, 53716, (608) 221-3322

IMPORTANT!

DO NOT use this vehicle for the first time until you have charged the battery for 18 hours.

Remember to…

- ✔ **Charge the battery immediately after each use.**
- ✔ **Charge the battery once a month during storage, even if the vehicle has not been used.**

Failure to follow these instructions will permanently damage your battery and void your warranty. Please refer to the Battery Care Section in this manual for more information.

For high speed operation, please refer to the "How to Operate Your Vehicle" section in this manual for more information.

DO NOT Return your Vehicle to the Store!

If you are missing parts or need assistance, please call us toll-free:

Power Wheels® Consumer Relations

1-800-348-0751

8 AM - 6 PM EST, Monday through Friday.

Or contact your local, **independently owned and operated** Power Wheels® Authorized Service Center. For the location nearest you, refer to the Authorized Service Center list in this manual.

POWER WHEELS by Fisher-Price®

Fisher-Price, Power Wheels, Power Wheels by Fisher-Price, Power Lock and Barbie are U.S. trademarks of Mattel, Inc.
Fisher-Price, Inc., a subsidiary of Mattel, Inc., East Aurora, New York 14052 U.S.A.
©2002 Mattel, Inc. All Rights Reserved. ® and ™ are registered trademarks of Mattel, Inc.

Printed in Mexico

B2077pr-0920