This Owner's Manual is provided and hosted by Appliance Factory Parts.

Appliance Factory Parts
Experts in BBQ, Humidifier, & Appliance Parts
1-800-955-7075

# FISHER PRICE N0457 Owner's Manual

Shop genuine replacement parts for FISHER PRICE N0457

Find Your FISHER PRICE Ride On Parts - Select From 999 Models

-------- Manual continues below --------

POWER WHEELS™
Fisher-Price®

- *Please read this manual and save it with your original sales receipt.*
- *Adult assembly is required.*
- *Requires three "AA" batteries (not included) for sounds and ligh box operation.*
- *Tool needed for assembly: Phillips screwdriver (not included)*
- *Use only with a Power Wheels® 12 Volt Lead-Acid Rechargeable Battery and a Power Wheels® 12 Volt Charger with type 12V connector (both included).*

# Owner's Manual

**with Assembly Instructions**

**For Models M7873 and N0457**

# TABLE OF CONTENTS

Important Information . . . . . 2
Warnings and Cautions . . . . . 3
Parts . . . . . 4
Parts Picture . . . . . 5
Battery Charging . . . . . 6
Assembly . . . . . 7
Decoration . . . . . 9
Sound Box Battery Installation . . . . . 10
12V Battery Installation . . . . . 11
Battery Care and Disposal . . . . . 12
Safe Driving Rules . . . . . 13
Vehicle Operation . . . . . 14
Cool ATV to Awesome A.T. Rex! . . . . . 15
Problems and Solutions Guide . . . . . 16
Vehicle Care . . . . . 19
Limited Warranty . . . . . 19

# IMPORTANT INFORMATION

- Your new vehicle requires adult assembly. Please set aside at least 30 minutes for assembly.
- You must charge your battery for 18 - 30 hours **before you use your vehicle for the first time**. We recommend that you start charging your battery before beginning assembly. Please see Battery Charging beginning on page 6 for detailed instructions.
- Read this manual carefully for important safety information and operating instructions before using your vehicle. Keep this manual for future reference as it contains important information.
- Avoid using this vehicle on inclined surfaces. This vehicle is appropriate for use on generally level rough terrains (including hard surfaces, wet and dry grass, ruts, gravel, mulch and mud) and by children 3 years of age and older.
- This vehicle has been pre-set so it will only operate in low speed. **See the instructions on page 14 for high speed lock-out information.**
- Use this vehicle **ONLY** outdoors. Most interior flooring can be damaged by riding this vehicle indoors. Fisher-Price® will not be responsible for damage to the floor if the vehicle is used indoors.
- To prevent damaging the motors and gears, teach your child to stop the vehicle before switching direction. Do not tow anything behind the vehicle or overload it. Do not exceed the maximum weight capacity of 65 lbs (29.5 kg).
- If you have any questions about your Power Wheels® vehicle, please call our toll-free service lines at **1-800-348-0751** from 9 AM to 7 PM (EST) Monday through Friday and 11 AM to 5 PM (EST) Saturday. Trained customer service representatives are available to take your call in English or French. Habla Español? Si usted tiene alguna pregunta ó necesita asistencia llame gratis **1-800-348-0755** para los Estados Unidos. Tenemos representantes que hablan español para atender su llamada.
- For your convenience, Power Wheels® maintains an **independently owned and operated** Authorized Service Center Network with more than 300 authorized service centers nationwide. Our authorized service centers will repair or replace parts under warranty at no extra charge, and can perform non-warranty repairs for a minimal charge. To find the authorized service center nearest you, please visit us online at **www.powerwheels.com** or call **1-800-348-0751**.
- To register your vehicle, please visit us on-line at **www.powerwheels.com.**

## ELECTRICAL HAZARD

### ⚠ WARNING

- Battery can fall out and injure a child if vehicle tips over. Always use battery retainer straps.
- **PREVENT FIRE**
  - Never modify the electrical system. Alterations could cause a fire resulting in serious injury and could also ruin the electrical system.
  - Use of the wrong type battery or charger could cause a fire or explosion resulting in serious injury.
  - Use of Power Wheels® components in products other than Power Wheels® vehicles could cause overheating, fire or explosion.
- The battery must be handled by adults only. The battery is heavy and contains sulfuric acid (electrolyte). Dropping the battery could result in serious injury.
- Never allow children to charge the battery. Battery charging must be done by adults only. A child could be injured by the electricity involved in charging the battery.
- Read the safety instructions on the battery.
- Examine the battery, charger and their connectors for excessive wear or damage each time you charge the battery. If damage or excessive wear is detected, do not use the charger or the battery until you have replaced the worn or damaged part.
- **HOT** motors. Handle carefully.

## RIDING HAZARD

### ⚠ WARNING

- **Prevent Injuries and Deaths**
  - Direct Adult Supervision Required.
  - Never Ride at Night.
  - Keep Children Within Safe Riding Areas.
    These areas must be:
    - away from swimming pools and other bodies of water to prevent drownings
    - generally level to prevent tipovers
    - away from steps, steep inclines, cars, roads and alleys.
  - Riding Rules
    Make sure children know and follow these rules for safe driving and riding.
    - Always sit on the seat.
    - Always wear shoes.
    - Only 1 (one) rider at a time.

### ⚠ CAUTION

- In the unassembled state, this package contains small parts. Adult assembly is required.
- Use the charger in dry locations only.

# PARTS

- If you experience a problem with this product, or are missing a part, please call us at **1-800-348-0751**, rather than return this product to the store.
- Please identify all parts before assembly and save all packaging material until assembly is complete to ensure that no parts are discarded.
- Some parts were placed under the seat for shipment. Press the tab under the back of the seat and lift to access the battery compartment.
- Metal parts have been coated with a lubricant to protect them during shipment. Wipe all metal parts with a paper towel to remove any excess lubricant.

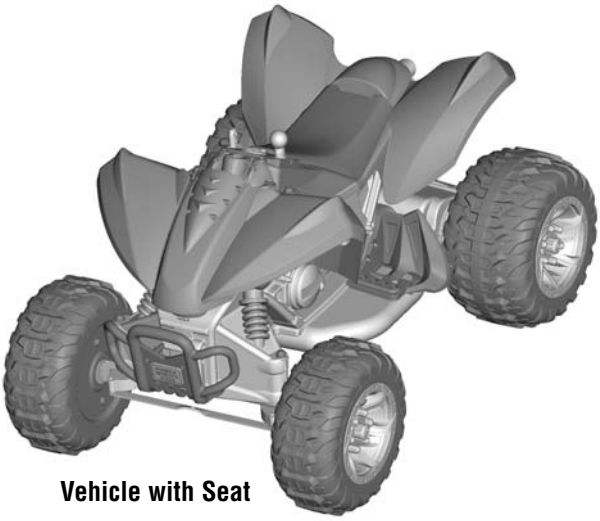

**Vehicle with Seat**

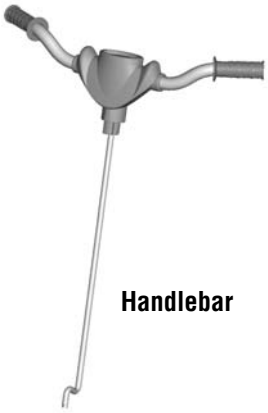

**Handlebar**

**Handle – 2 Pieces**

**Steering Column Clip**

**12 Volt Battery**

**12 Volt Battery Charger**

**Steering Column Cap**

**Part not shown: Label Sheet**

**#6 x 1/2" Screw - 1**

**#8 x 3/4" Screw - 1**

**Screws are shown actual size.**

**Note:** Tighten and loosen all screws with a Phillips screwdriver. Do not over-tighten the screws.

# PARTS PICTURE

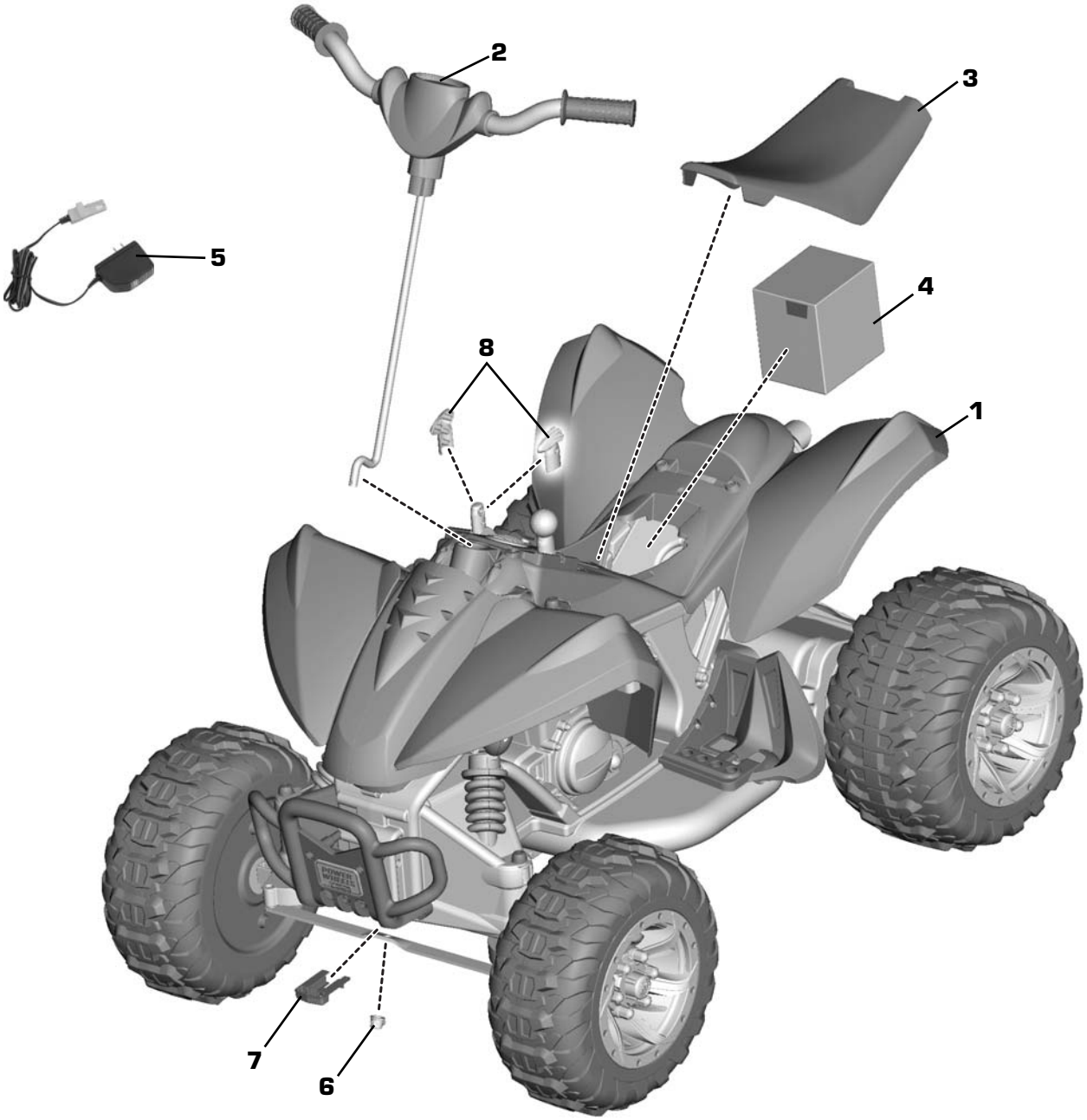


| | | | | |
|---|---|---|---|---|
| **1** | Vehicle | **5** | 12 Volt Battery Charger | **Parts Not Shown** |
| **2** | Handlebar | **6** | Steering Column Cap | Label Sheet |
| **3** | Seat | **7** | Steering Column Clip | #6 x 1/2" Screw - 1 |
| **4** | 12 Volt Battery | **8** | Handle – 2 Pieces | #8 x 3/4" Screw - 1 |

# BATTERY CHARGING

## ELECTRICAL HAZARD

### ⚠ WARNING

- Battery can fall out and injure a child if vehicle tips over. Always use battery retainer straps.
- **PREVENT FIRE**
  - Never modify the electrical system. Alterations could cause a fire resulting in serious injury and could also ruin the electrical system.
  - Use of the wrong type battery or charger could cause a fire or explosion resulting in serious injury.
  - Use of Power Wheels® components in products other than Power Wheels® vehicles could cause overheating, fire or explosion.
- The battery must be handled by adults only. The battery is heavy and contains sulfuric acid (electrolyte). Dropping the battery could result in serious injury.
- Never allow children to charge the battery. Battery charging must be done by adults only. A child could be injured by the electricity involved in charging the battery.
- Read the safety instructions on the battery.
- Examine the battery, charger and their connectors for excessive wear or damage each time you charge the battery. If damage or excessive wear is detected, do not use the charger or the battery until you have replaced the worn or damaged part.

### ⚠ CAUTION

Use the charger in dry locations only.

### About Thermal Fuses

Your Power Wheels® 12 volt battery is equipped with a built-in thermal fuse. The thermal fuse is a self-resetting safety device which automatically “trips” and shuts down operation of the vehicle if the vehicle is overloaded or the driving conditions too severe. Once a fuse has "tripped", remove your foot from the pedal and wait approximately 25 seconds before operating the vehicle again. To avoid repeated automatic shut-downs, do not overload the vehicle by exceeding the 65 lb. (29.5 kg) maximum weight capacity or by towing anything behind the vehicle. Avoid severe driving conditions, such as driving up slopes or running into fixed objects, which can cause the wheels to stop spinning while power is still being supplied to the motors and make sure your child stops the vehicle before switching direction.

If a thermal fuse in a battery continually trips under normal driving conditions, please contact your local Power Wheels® Authorized Service Center. For the location of the Authorized Service Center nearest to you, visit us on-line at **www.powerwheels.com,** or call **1-800-348-0751.**

### Important Notes

- **Your new battery must be charged for at least 18 hours before you use it in your vehicle for the first time.**
- We recommend that you start charging your battery before beginning assembly of your new vehicle.
- The battery must be upright while charging.
- The charger is not a toy.
- Do not short circuit the battery.
- You do not need to remove the battery from your vehicle to recharge it.
- Before charging the battery, examine the battery case for cracks and other damage which may cause sulfuric acid (electrolyte) to leak during the charging process. If damage is detected, do not charge the battery or use it in your vehicle. Battery acid is very corrosive and can cause severe damage to surfaces it contacts.
- Do not charge the battery on a surface (such as a kitchen counter top) which could be damaged by the acid contained inside the battery. Take precautions to protect the surface on which you charge your battery.
- Use only a Power Wheels® 12 volt charger with "12 V" connector (input 120 VAC, 60 Hz with an output of 12 VDC, 1200 mA) to charge your Power Wheels® 12 volt battery.

**Adults Note:** Regularly examine the charger for damage to the cord, plug, housing or other parts that may result in the risk of fire, electric shock or injury. In the event of any damage, do not use the charger until the damage has been properly repaired. Please call **1-800-348-0751**.

- If your battery is old and will not accept a charge, do not leave it in the vehicle. Always remove a dead battery from the vehicle.

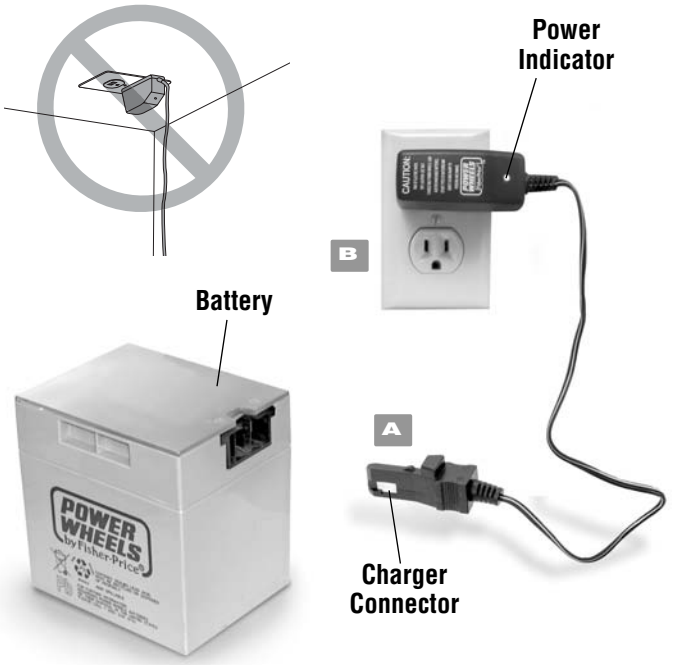


- Plug the charger connector into the battery A .
- Plug the charger into a standard wall outlet B .

**Notes:**

- Use the charger only in a wall outlet. Do not plug the charger into a ceiling outlet.
- If power flow to the wall outlet is controlled by a switch, make sure the switch is “ON”.
- The power indicator on the charger does not indicate the charge status of your battery. The power indicator allows you to see that there is power from the wall outlet.

- Before first-time use, charge the battery for **at least 18 hours.** Never charge the battery longer than 30 hours.
- Recharge the battery for at least 14 hours after each use of your vehicle. Do not charge the battery longer than 30 hours.
- Once the battery is charged, disconnect the charger connector from the battery. Unplug the charger from the wall outlet. The battery is now ready to be installed in your vehicle. Please see the Battery Installation section on page 11 for detailed instructions on installing your battery. If your battery is already installed in your vehicle, simply re-connect the motor harness connector to the battery.

# ASSEMBLY

## ⚠ WARNING

Children can be harmed by small parts, sharp edges and sharp points in the vehicle's unassembled state, or by electrical items. Care should be taken in unpacking and assembly of the vehicle. Children should not handle parts, including the battery, or help in assembly of the vehicle.

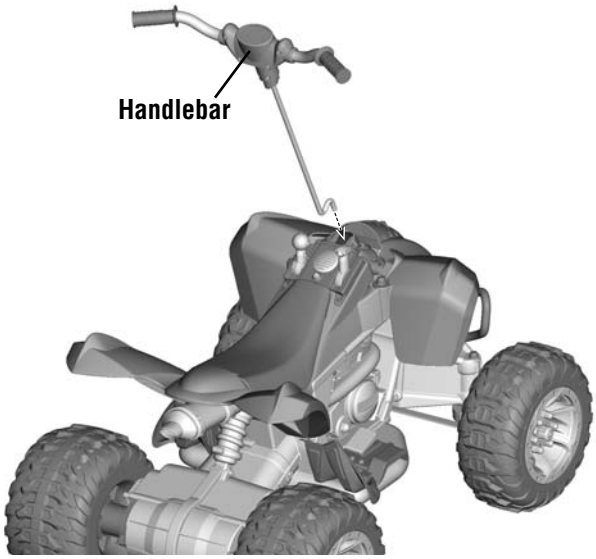


1 BACK VIEW

- Fit the handlebar steering column down through the large opening in the front end of the vehicle.

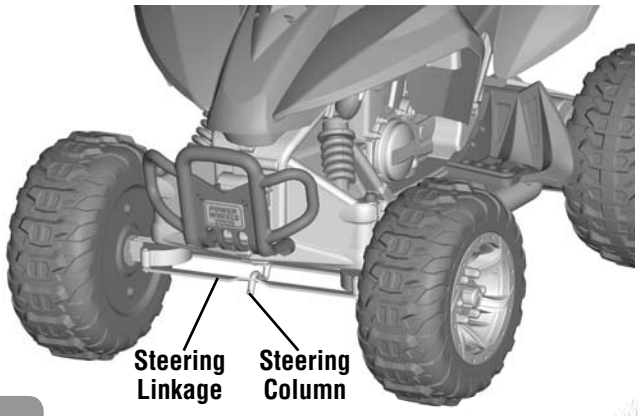


2 FRONT VIEW

- Make sure the front wheels on the vehicle are straight (not turned).
- Fit the end of the steering column into the hole in the steering linkage.

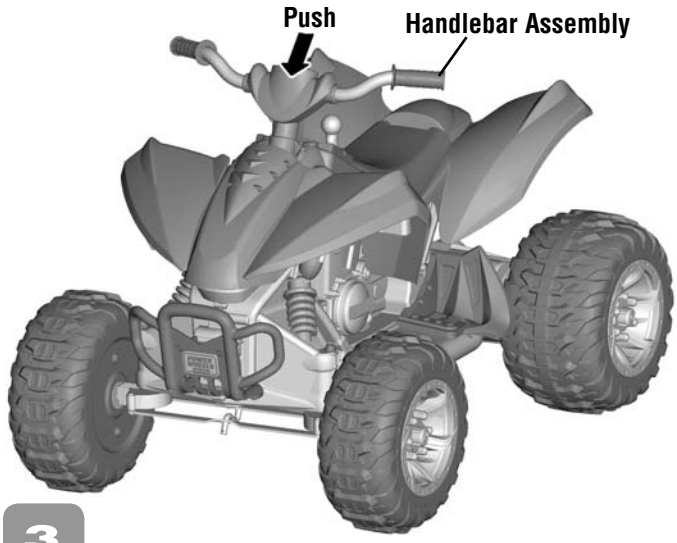


**3**

- Push down on the handlebar assembly to **"snap"** it in place.

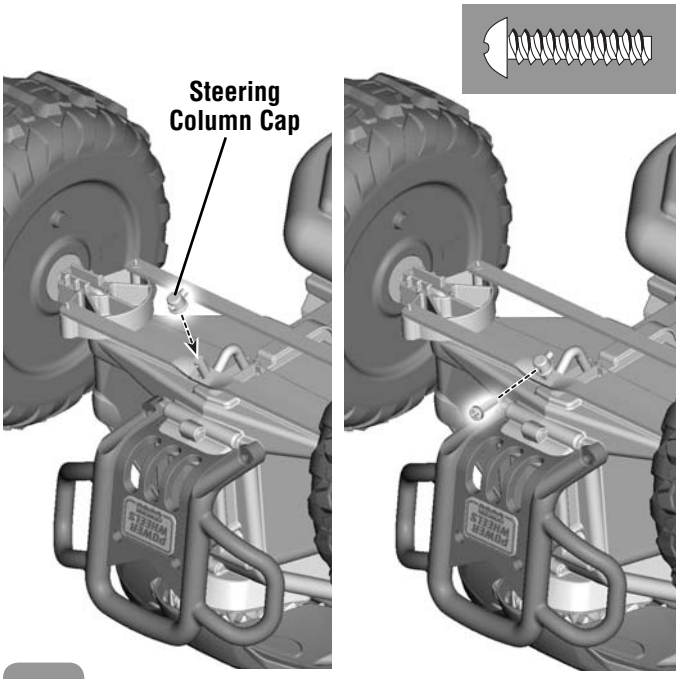


**4** **BOTTOM VIEW**

- Carefully turn the vehicle upside-down.
- Again, make sure the end of the steering column is through the hole in the steering linkage.
- Fit the steering column cap onto the end of the steering column.
- Insert the #8 x 3/4" screw through the large opening in the steering column cap and through the hole in the steering column. Tighten the screw.

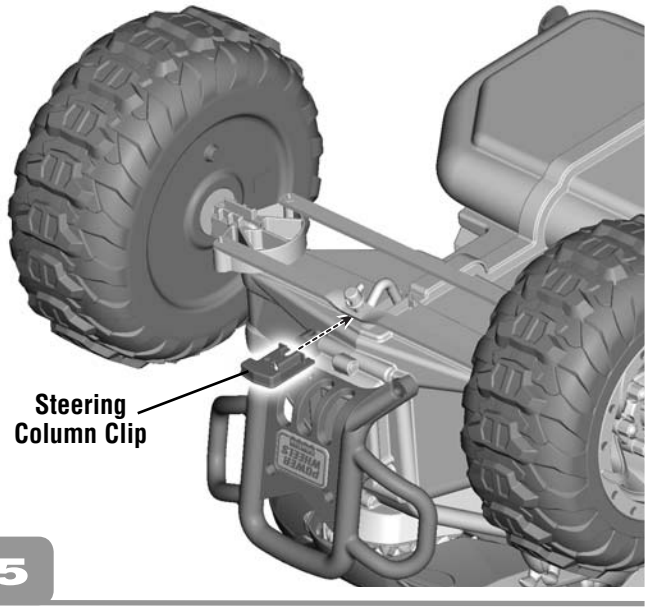


**5**

- Slide the steering column clip under the steering column, as shown, and push to **"snap"** in place.
- Turn the vehicle upright.

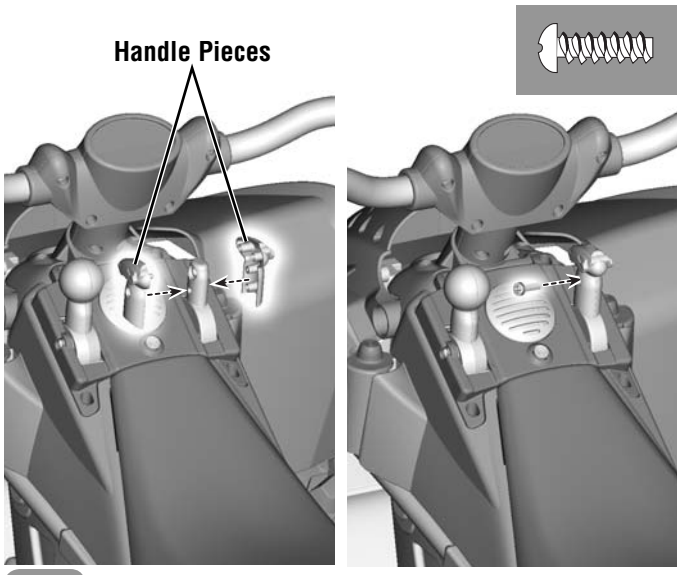


**6** **DASH VIEW**

- Fit BOTH handle pieces onto the handle base on the dash of the vehicle.

**Note:** The handle pieces are designed to fit one way. If either piece does not seem to fit on one side of the handle try the other side!

- Insert the #6 x 1/2" screw into the handle assembly and tighten.

# DECORATION

- Before applying the labels, wipe the surface of the vehicle with a clean, dry cloth to remove any dust or oils.
- Place the labels exactly as shown in the illustrations. For best results, avoid repositioning a label once it has been applied to the vehicle.
- After applying a label, rub the label firmly with a clean, dry cloth to make sure the label is adhered to your vehicle. Start at the center of a label, and smooth towards the outer edges to remove air bubbles.

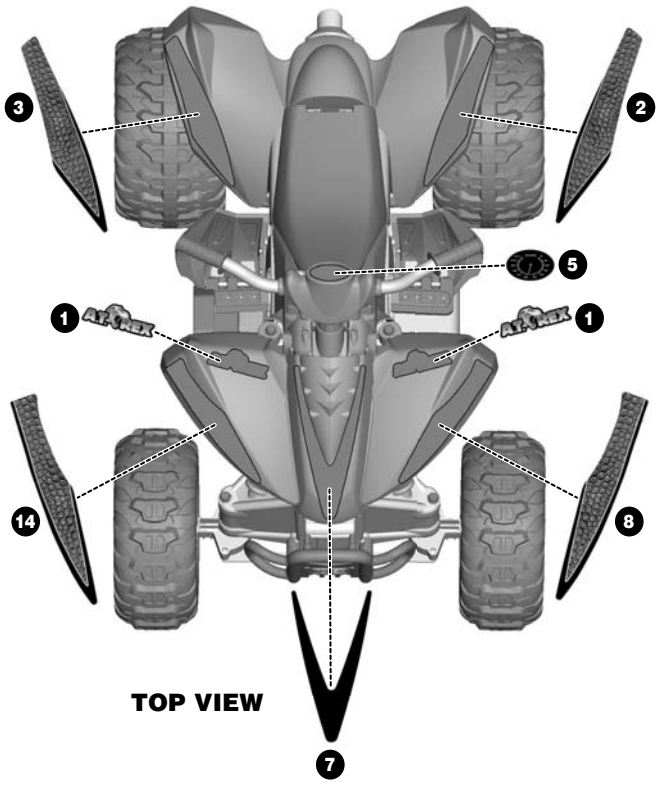


TOP VIEW

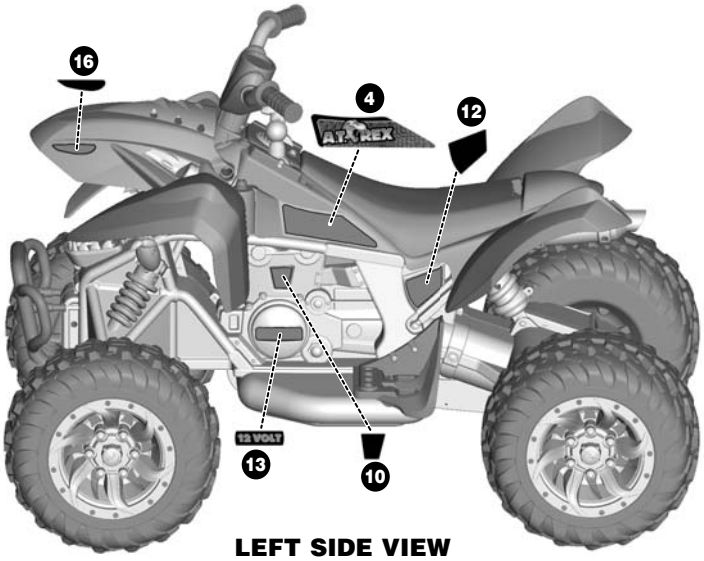


LEFT SIDE VIEW

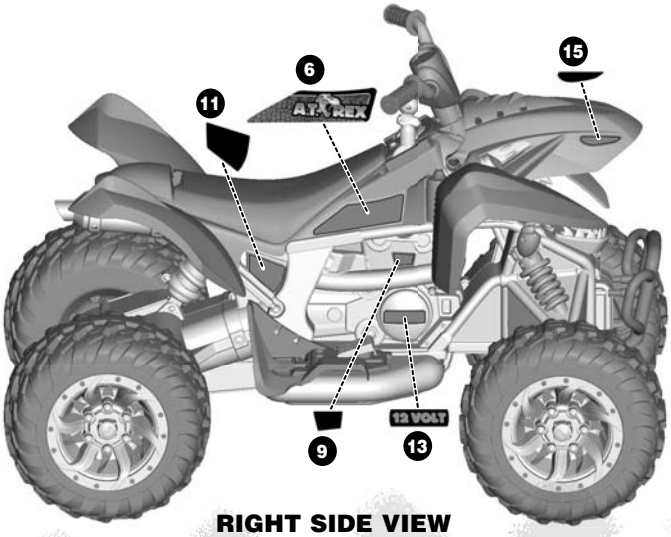


RIGHT SIDE VIEW

# SOUND BOX BATTERY INSTALLATION

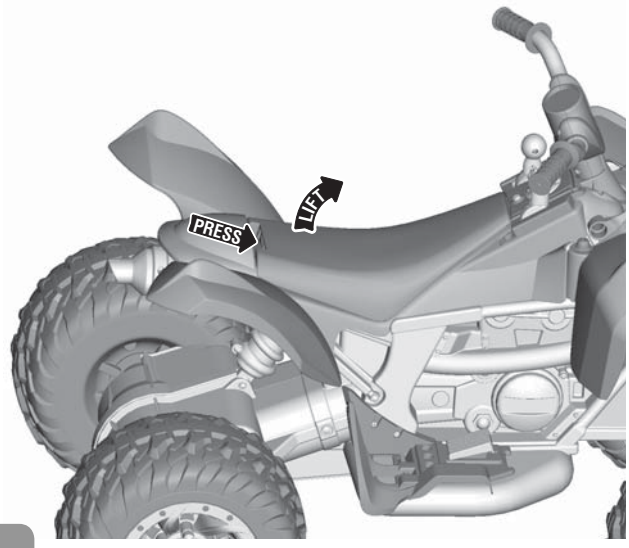


**1** **SIDE VIEW**

- Press the tab under the back edge of the seat and lift to remove the seat.

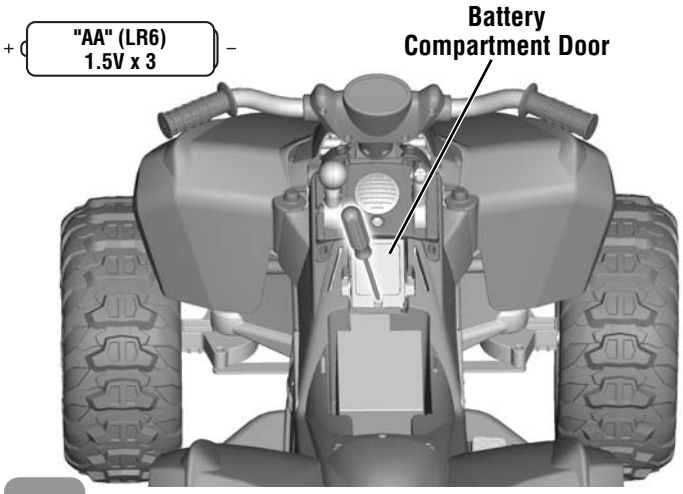


**2** **DASH VIEW**

- Locate the battery compartment near the dash.
- Loosen the screw in the battery compartment door. Remove the battery compartment door.
- Insert three “AA” (LR6) **alkaline** batteries.

**Hint:** We recommend using **alkaline** batteries for longer battery life.

- Replace the battery compartment door and tighten the screw.
- Fit the tab at the front of the seat into the slot near the sound button.**“Snap”** the tab at the back of the seat into the slot near the rear of the vehicle
- If the toy begins to operate erratically, you may need to reset the electronics. Remove the batteries and replace them.
- When sounds or lights from this toy become faint or stop, it’s time for an adult to change the batteries.

Protect the environment by not disposing of this product with household waste (2002/96/EC). Check your local authority for recycling advice and facilities (Europe only).

### Battery Safety Information

In exceptional circumstances, batteries may leak fluids that can cause a chemical burn injury or ruin your product. To avoid battery leakage:

- Do not mix old and new batteries or batteries of different types: alkaline, standard (carbon-zinc) or rechargeable (nickel-cadmium).
- Insert batteries as indicated inside the battery compartment.
- Remove batteries during long periods of non-use. Always remove exhausted batteries from the product. Dispose of batteries safely. Do not dispose of product in a fire. The batteries inside may explode or leak.
- Never short-circuit the battery terminals.
- Use only batteries of the same or equivalent type as recommended.
- Do not charge non-rechargeable batteries.
- Remove rechargeable batteries from the product before charging.
- If removeable, rechargeable batteries are used, they are only to be charged under adult supervision.

### FCC Statement (United States Only)

This equipment has been tested and found to comply with the limits for a Class B digital device, pursuant to Part 15 of the FCC Rules. These limits are designed to provide reasonable protection against harmful interference in a residential installation. This equipment generates, uses and can radiate radio frequency energy and, if not installed and used in accordance with the instructions, may cause harmful interference to radio communications. However, there is no guarantee that interference will not occur in a particular installation. If this equipment does cause harmful interference to radio or television reception, which can be determined by turning the equipment off and on, the user is encouraged to try to correct the interference by one or more of the following measures:

- Reorient or relocate the receiving antenna.
- Increase the separation between the equipment and receiver.
- Consult the dealer or an experienced radio/TV technician for help.

Note: Changes or modifications not expressly approved by the manufacturer responsible for compliance could void the user’s authority to operate the equipment.

This device complies with Part 15 of the FCC Rules. Operation is subject to the following two conditions: (1) this device may not cause harmful interference and (2) this device must accept any interference received, including interference that may cause undesired operation.

### ICES-003

- This Class B digital apparatus complies with Canadian ICES-003.
- Operation is subject to the following two conditions: (1) this device may not cause harmful interference and (2) this device must accept any interference received, including interference that may cause undesired operation.

### NMB-003

Cet appareil numérique de la classe B est conforme à la norme NMB-003 du Canada.

L’utilisation de ce dispositif est autorisée seulement aux conditions suivantes: (1) il ne doit pas produire de brouillage et (2) l’utilisateur du dispositif doit être prêt à accepter tout brouillage radioélectrique reçu, même si ce brouillage est susceptible de compromettre le fonctionnement du dispositif.

# 12V BATTERY INSTALLATION

**IMPORTANT!** Use only a Power Wheels® 12 volt lead-acid rechargeable battery. Use of any other battery will damage your vehicle. Make sure that you charge the battery for at least 18 hours using the enclosed Power Wheels® 12 volt charger before operating your vehicle for the first time. Charge the battery for at least 14 hours after each use of the vehicle. Never charge the battery longer than 30 hours. Failure to follow these instructions may damage your battery and will void your warranty.

1

- Press the tab under the back edge of the seat and lift to remove the seat.

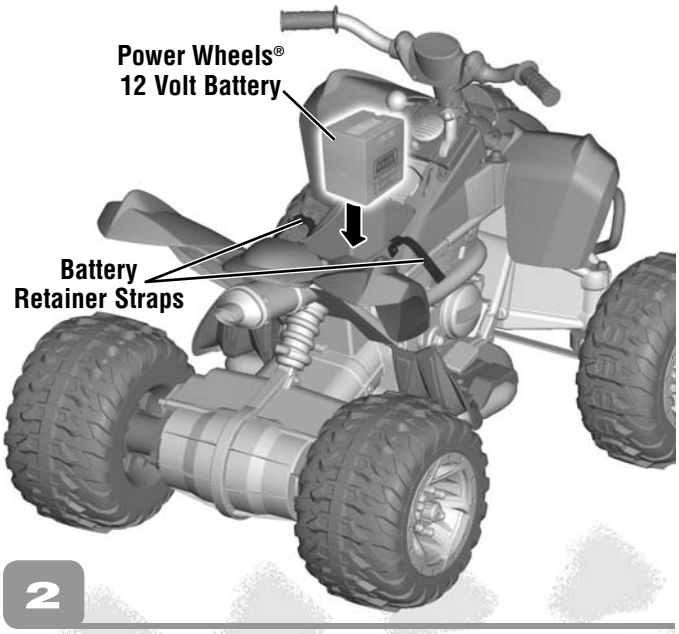


2

- Unfasten the battery retainer straps to access the battery compartment.
- Place the battery upright in the battery compartment.

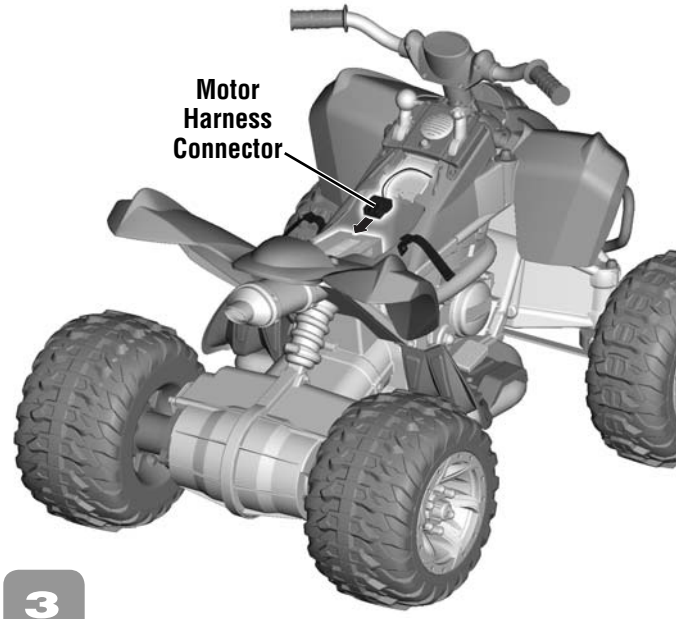


3

- Plug the motor harness connector into the battery.

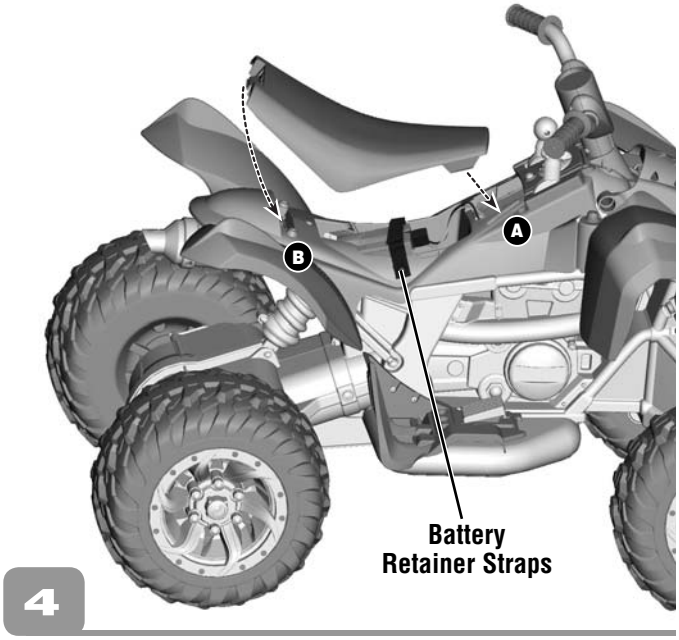


4

- Secure the fasteners on the battery retainer to hold the battery in place.
- Fit the tab at the front of the seat into the slot near the sound button **A**.
- **"Snap"** the tab at the back of the seat into the slot near the rear of the vehicle **B**.

# BATTERY CARE AND DISPOSAL

## Care

**If a battery leak develops,** avoid contact with the leaking acid and place the damaged battery in a plastic bag. See information below for proper disposal.

**If acid comes in contact with skin or eyes,** flush with cool water for at least 15 minutes and call a physician.

**If acid is internally ingested,** give water, milk of magnesia or egg whites immediately. Never give emetics or induce vomiting. Call a physician.

- Charge a new battery for at least 18 hours before first use. Never charge the battery longer than 30 hours. Overcharging or undercharging the battery may shorten battery life and decrease vehicle running time.
- After the first charge, recharge the battery for at least 14 hours after each use. Never charge the battery longer than 30 hours. Charge the battery after each use, regardless of how long the vehicle was used.
- The battery must be upright while charging.
- Do not allow the battery to run down completely before charging.
- Charge the battery before storing the vehicle.
- Charge the battery at least once per month, even if the vehicle has not been used.
- Leaving the battery in a discharged condition will ruin it.
- Always remove an exhausted battery from the vehicle. Battery leakage and corrosion can damage the vehicle.
- Do not store the battery on a surface (such as a kitchen counter top) which could be damaged by the acid contained inside the battery. Take precautions to protect the surface on which you store the battery.
- Do not store the battery in temperatures above 75° F or below -10° F.
- Use only a Power Wheels® 12 volt battery. Remember to charge the new battery for at least 18 hours before first use.
- Prevent the battery from moving freely inside the battery compart-ment. **Always use the battery retainer straps to secure the battery in the battery compartment.**
- Examine the battery, charger and their connectors for excessive wear or damage each time you charge the battery. If damage is detected, do not use the charger or the battery until you have replaced the worn or damaged part.

## Disposal

- Your Power Wheels® battery is a non-spillable, sealed lead-acid battery. It must be recycled or disposed of in an environmentally sound manner.
- Do not dispose of a lead-acid battery in a fire. The battery may explode or leak.
- Do not dispose of a lead-acid battery in your regular, household trash. The incineration, landfilling or mixing of sealed lead-acid batteries with household trash is prohibited by law in most areas.
- Protect the environment by not disposing of this product with household waste (2002/96/EC). Check your local authority for recycling advice and facilities (Europe only).
- Return an exhausted battery to a federal or state approved lead-acid battery recycler, such as a Power Wheels® authorized service center or a local seller of automotive batteries. For the authorized service center location nearest to you, please visit us on-line at **www.powerwheels.com** or call **1-800-348-0751**. Contact your local waste management officials for other information regarding the environmentally sound collection, recycling and disposal of lead-acid batteries. If you live in the State of Florida or the State of Minnesota, it is prohibited by law for anyone to throw away lead-acid batteries in the municipal waste stream.

# SAFE DRIVING RULES

**RIDING HAZARD**

**⚠ WARNING**

- **Prevent Injuries and Deaths**
  - Direct Adult Supervision Required.
  - Never Ride at Night.
  - Keep Children Within Safe Riding Areas. These areas must be:
    - away from swimming pools and other bodies of water to prevent drownings
    - generally level to prevent tipovers
    - away from steps, steep inclines, cars, roads and alleys.
  - Riding Rules
    Make sure children know and follow these rules for safe driving and riding.
    - Always sit on the seat.
    - Always wear shoes.
    - Only 1 (one) rider at a time.

**Restrict your child's driving to areas that are generally level.**

## Teach Safety Rules to Children

While children can quickly develop the skill necessary to drive this vehicle, it is important to remember that their judgment skills are still very immature. Unsupervised driving by children can lead to serious injury. Before children use this vehicle, an adult should carefully evaluate the driving area as well as the children's skill level and ability to drive this vehicle safely. Children are not always able to recognize or anticipate hazards, even when they have been taught about them. There is no acceptable substitute for direct adult supervision.

Teach appropriate safety rules to your child before allowing operation of this vehicle. These rules should also be reviewed with neighborhood children or other playmates who want to drive this vehicle.

## Riding Rules

**Make sure children know and follow these rules for safe driving:**

1. Always sit on the seat.
2. Always wear shoes.
3. Only 1 (one) rider at a time. A child who is not sitting on the seat or who is standing on the vehicle could fall off, cause a tip-over or block the driver's view. A child could be seriously injured.
4. Do not allow any child to drive the vehicle in the street or near moving (motorized) vehicles.
5. Do not allow any child to drive near bodies of water (such as pools or creeks), obstructions (such as furniture, low tree limbs or play equipment), or drop-offs (such as stairs or decks).
6. Do not allow any child to drive the vehicle in the dark. A child could encounter unexpected obstacles and have an accident. Operate the vehicle only in the daytime or a well-lit area.
7. Restrict your child's driving to areas that are generally level with gentle inclines or slopes.
8. Do not allow your child to drive down or across a steep slope.
   - The vehicle may gain unsafe speed, even if the pedal is released to stop.
   - The vehicle may tilt and tip over.
   - The wheels could lose traction, causing the vehicle to slip.
9. Do not allow your child to drive up steep inclines. The motor may stop and the vehicle could roll backwards at an unsafe speed.
10. Never put anything near any moving parts. Rotating parts such as motors, gear boxes and wheels can snag fingers, hair, etc., causing serious injury. Do not allow operation of the vehicle when it is on its side or in an upside-down position.
11. Do not operate the vehicle near flammable vapors (gasoline, paint thinner, acetone, liquid wax, etc.). The vehicle's electrical switches, like most electrical switches, emit an internal spark when first turned on or turned off. The presence of flammable liquids or vapors could cause an explosion or a fire. Keep all flammable products in tightly sealed containers and away from the vehicle.
12. Do not allow a child to operate the vehicle without direct adult supervision. To prevent unsupervised use of the vehicle, disconnect the motor harness from the battery when the vehicle is not in use.
    **To disconnect the motor harness:**
    - Press the rear tab on the seat and lift to remove.
    - Pull the motor harness connector from the battery.
    - Replace the seat on the vehicle.

# VEHICLE OPERATION

As assembled, your vehicle is ready to roll in low speed (2½ mph, maximum). After your child has mastered the basic skills of driving and understands the rules for safe driving, it's time to remove the high speed lock out screw to operate in high speed**. See the instructions in this section to remove the lock out screw and operate the vehicle at high speed.**

## Beginner Use - Low Speed Drive

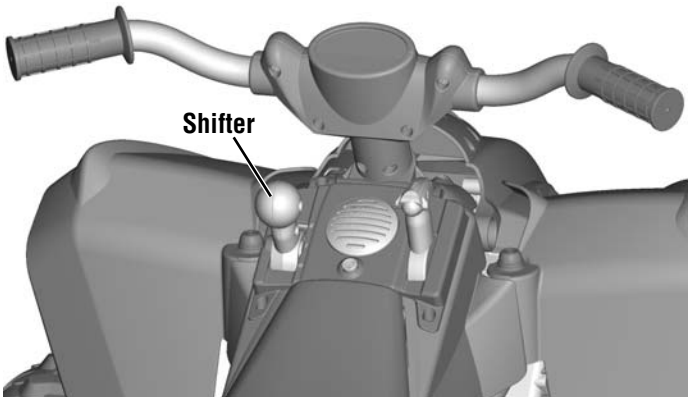


- Make sure the shifter is in low speed position **1**.
- Press the foot pedal. The vehicle goes forward at a maximum of 2½ mph.
- Help your child practice steering to learn how far and how quickly to turn the handlebar when driving forward in low speed.

## Advanced Use - High Speed Drive

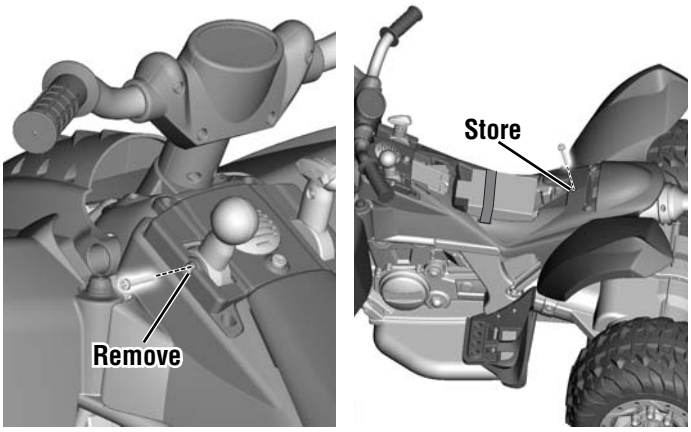


- Remove the high speed lock out screw from the shifter.
- Remove the seat on the vehicle. Store the high speed lock out screw.

## To Back Up

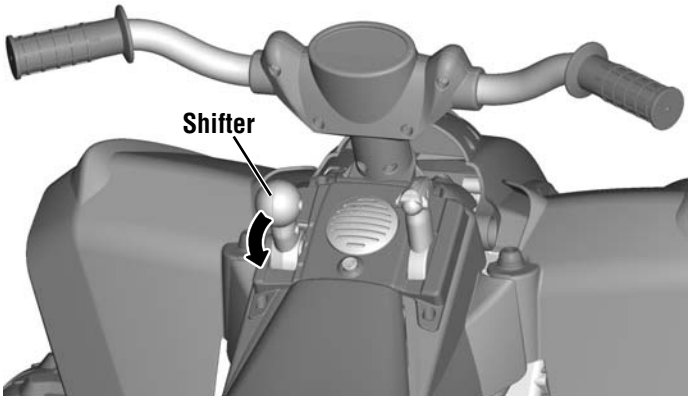


**IMPORTANT! To prevent damaging the motors and gears, teach your child to stop the vehicle before switching direction.**

- Make sure the shifter is in reverse position **R**.
- Press the foot pedal. The vehicle backs up at a maximum of 2½ mph.
- Help your child practice steering to learn how far and how quickly to turn the handlebar when driving in reverse.

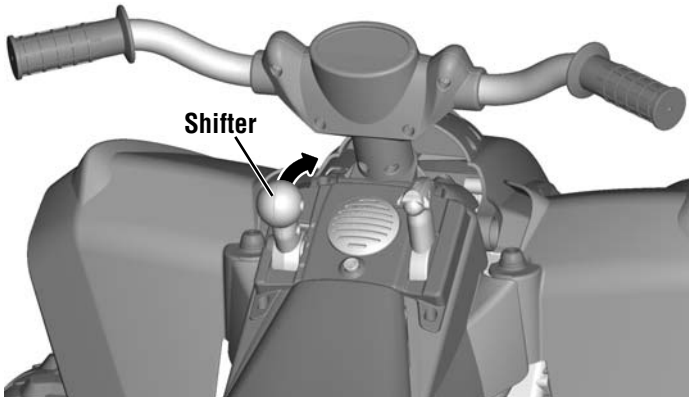


- Make sure the shifter is in high speed position **2**.
- Press the foot pedal. The vehicle moves forward at a maxiumum speed of 5 mph.
- Help your child practice steering to learn how far and how quickly to turn the handlebar when driving forward in high speed.

**IMPORTANT!** Use the vehicle ONLY outdoors. Most interior flooring can be damaged by riding the vehicle indoors. Fisher-Price® will not be responsible for damage to floors if vehicle is used indoors.

**STOP!**

- Your vehicle has a patented, electronic braking system that automatically stops the vehicle when your child's foot lifts from the pedal.
- Make sure your child is comfortable with steering the vehicle and automatically knows how to stop.

# COOL ATV TO AWESOME A.T. REX!

- Press the sound button to hear A.T. Rex growl and roar.

- Pull the handle down to transform the ATV into an A.T. Rex. Listen as the A.T. Rex growls and roars, and watch his eyes light up!

***Hint:*** *Pull the handle all the way down to keep the vehicle in A.T. Rex mode.*

- Push the handle forward to transform back to an ATV.

# PROBLEMS AND SOLUTIONS

**IMPORTANT!** If you experience a problem with your vehicle, first check the Problems and Solutions Guide below. If you still experience a problem, please contact Power Wheels® Consumer Relations, toll-free at **1-800-348-0751** between 9 AM - 7 PM (EST) Monday through Friday and 11 AM - 5 PM (EST) Saturday. Or, contact your local Power Wheels® authorized service center. For the location nearest you, please visit us on-line at **www.powerwheels.com**, or call **1-800-348-0751**.

| PROBLEM | POSSIBLE CAUSE | SOLUTION |
|---|---|---|
| Vehicle does not run | Undercharged battery | Charge the battery. A new battery should have been charged for at least 18 hours before using the vehicle for the first time. After first-time use, recharge the battery for at least 14 hours after each use. Never charge the battery longer than 30 hours. |
| | | Check all connectors. Make sure the charger connector is plugged into the battery, and that the charger is plugged into the wall. |
| | | Make sure power flow to the wall outlet is “ON”. |
| | Charger is not working | There is no sure way to tell if your charger is working unless you have a volt meter. If you suspect there is a problem with your charger, contact your local Power Wheels® authorized service center. They can test your charger for you. |
| | Tripped thermal fuse | The built-in thermal fuse may “trip” and shut down operation of the vehicle if the vehicle is overloaded or the driving conditions too severe. Once a fuse has “tripped”, remove your foot from the pedal and wait approximately 25 seconds before operating the vehicle again. To avoid repeated automatic shutdowns, do not overload the vehicle by exceeding the 65 lbs (29.5 kg) maximum weight capacity or by towing anything behind the vehicle. Do not drive up hills or run into fixed objects, which can cause the wheels to stop spinning while power is still being supplied to the motors. If a thermal fuse continually trips, contact your local Power Wheels® authorized service center. |
| | Loose wire or loose connectors | Check all wires and connectors. Make sure the motor harness connector is plugged into the battery, and that there are no loose wires around the motors. |
| | Dead battery | If your battery is old or if you have not followed Battery Care instructions, your battery may be dead. If you are unsure whether or not the battery is dead, you can have it tested at your local Power Wheels® authorized service center. |
| | Electrical switch damage | The electrical switches can become corroded due to exposure to water or moisture, or can jam due to loose dirt, sand or gravel. Contact your local Power Wheels® authorized service center for diagnosis and repair. |
| | Motor damage | Contact your local Power Wheels® authorized service center for diagnosis and repair. |
| Vehicle was running but suddenly stopped | Loose wire or loose connectors | Check all wires and connectors. Make sure the motor harness connector is plugged into the battery, and that there are no loose wires around the motors. |
| | Tripped thermal fuse | The built-in thermal fuse may "trip" and shut down operation of the vehicle if the vehicle is overloaded or the driving conditions too severe. Once a fuse has “tripped”, remove your foot from the pedal and wait approximately 25 seconds before operating the vehicle again. To avoid repeated automatic shutdowns, do not overload the vehicle by exceeding the 65 lbs (29.5 kg) maximum weight capacity or by towing anything behind the vehicle. Do not drive up hills or run into fixed objects, which can cause the wheels to stop spinning while power is still being supplied to the motors. If a thermal fuse continually trips, contact your local Power Wheels® authorized service center. |

| PROBLEM | POSSIBLE CAUSE | SOLUTION |
|---|---|---|
| Short run time (Less than 1 - 3 hours per charge) | Undercharged battery | Charge the battery. A new battery should have been charged for at least 18 hours before using the vehicle for the first time. After first-time use, recharge the battery for at least 14 hours after each use. Never charge the battery longer than 30 hours. |
| | | Check all wires and connectors. Make sure the charger connector is plugged into the battery, and that the charger is plugged into the wall. |
| | | Make sure power flow to the wall outlet is “ON”. |
| | Overcharged battery | Do not charge the battery longer than 30 hours. If you suspect that your battery is damaged as a result of overcharging, contact your local Power Wheels® authorized service center. They can test your battery for you. |
| | Battery is old and will not accept full charge | Even with proper care, a rechargeable battery does not last forever. Average battery life is 1 to 3 years depending on vehicle use and use conditions. Replace the battery with a new Power Wheels® 12 volt rechargeable battery. Do not substitute parts. |
| | Tripped thermal fuse | The built-in thermal fuse may “trip” and shut down operation of the vehicle if the vehicle is overloaded or the driving conditions too severe. Once a fuse has “tripped”, remove your foot from the pedal and wait approximately 25 seconds before operating the vehicle again. To avoid repeated automatic shutdowns, do not overload the vehicle by exceeding the 65 lbs (29.5 kg) maximum weight capacity or by towing anything behind the vehicle. Do not drive up hills or run into fixed objects, which can cause the wheels to stop spinning while power is still being supplied to the motors. If a thermal fuse continually trips, contact your local Power Wheels® authorized service center. |
| Vehicle runs sluggishly | Undercharged battery | Charge the battery. A new battery should have been charged for at least 18 hours before using the vehicle for the first time. After first-time use, recharge the battery for at least 14 hours after each use. Never charge the battery longer than 30 hours. |
| | | Check all connectors. Make sure the charger connector is plugged into the battery, and that the charger is plugged into the wall. |
| | | Make sure power flow to the wall outlet is “ON”. |
| | Battery needs charging | Be sure to charge the battery after each use. |
| | Battery is old and will not accept full charge | Even with proper care, a rechargeable battery does not last forever. Average battery life is 1 to 3 years depending on the vehicle use and use conditions. Replace the battery with a new Power Wheels® 12 volt rechargable battery. Do not substitute parts. |
| | Vehicle is overloaded | Make sure you do not overload the vehicle by allowing more than one rider at one time, by exceeding the 65 lbs (29.5 kg) maximum weight capacity, or by towing objects behind the vehicle. |
| | Driving conditions are too stressful | Restrict your child's driving to areas that are generally level with gentle inclines or slopes. |

| PROBLEM | POSSIBLE CAUSE | SOLUTION |
|---|---|---|
| Vehicle runs in low speed, but does not run in high speed.<br><br>Please note: The vehicle is designed to operate in low speed only in reverse. | High speed lock out screw not removed. | The vehicle was pre-set to run only in low speed. To allow the vehicle to run in low and high speed, you must remove the high speed lock out screw from shifter. Follow the instructions on page 14. |
| When the foot pedal is pressed one rear wheel spins | Operation of vehicle in low speed | It is possible that only one rear wheel may spin when both rear wheels are raised off the ground and the vehicle is in low speed. This does not necessarily indicate a problem. Check for proper operation of the drive system by raising the rear wheels off the ground and pressing the foot pedal. If only one rear wheel spins, carefully press your hand on the spinning wheel to slow it down. The other rear wheel should begin to spin. If the other rear wheel does not begin to spin, there may be a problem with the vehicle. Contact your local Power Wheels® authorized service center for diagnosis and repair. |
| Sometimes the vehicle doesn't run, but other times it does | Loose wire or connector | Check all wires around the motors and all connectors to make sure they are tight. |
| | Motor or electrical switch damage | Contact your local Power Wheels® authorized service center for diagnosis and repair. |
| When the foot pedal is pressed, the vehicle won't run without a push | Loose wire or connector | Check all wires around the motors and all connectors to make sure they are tight. |
| | "Dead Spot" on motor | Contact your local Power Wheels® authorized service center for diagnosis and repair. |
| Battery's thermal fuse constantly "trips", but the vehicle is not overloaded nor the driving conditions too severe | Damaged battery | Contact your local Power Wheels® authorized service center for diagnosis and repair. |
| | Child is switching between FORWARD and REVERSE without stopping | Teach your child to stop the vehicle before switching direction. |
| Loud clacking or grinding noise from a motor-gearbox | Broken gears | Contact your local Power Wheels® authorized service center for diagnosis and repair. |
| Charger gets warm during use | It is normal for some chargers to get warm during use and is not reason for concern. | No action required. |
| | | If your charger does not get warm during use, it does not mean that it is not working properly. |
| Battery makes a sizzling or gurgling noise when charging | It is normal for some batteries to make noise and swell slightly while charging and is not reason for concern. | No action required. |
| | | If your battery does not make noise or swell slightly during charging, it does not mean that it is not accepting the charge. |

# VEHICLE CARE

- Check all screws and their protective coverings regularly and tighten as required. Check plastic parts on a regular basis for cracks or broken pieces.
- During snowy or rainy weather, the vehicle should be stored inside or under a protective cover. Remember to charge the battery at least once per month while your vehicle is not in regular use.
- An extremely dirty vehicle can be rinsed with a hose but avoid spraying directly into switches, motors and battery compartment. Water or moisture in the motors or electrical switches can cause them to corrode, and could cause switch or motor failure.
- Avoid operating the vehicle on sand. Sand in the motors or electrical switches can cause them to jam, and could cause switch or motor failure.
- The vehicle can be wiped down with a soft, dry cloth. For a shiny finish, you can wipe plastic parts with a non-wax furniture polish applied to a soft-cloth. Do not use automotive wax.
- To ensure that your vehicle stays in good operating order, we recommend that you periodically have your vehicle checked by a Power Wheels® authorized service center. For the location of the authorized service center nearest you, please visit us on-line at **www.powerwheels.com** or call **1-800-348-0751**.

# LIMITED WARRANTY

## Bumper-to-Bumper* Limited Warranty

**One year limited warranty from the date of purchase on the Power Wheels® vehicle.**

**Six month limited warranty on the 12 volt battery.**

For the original purchaser, this one year limited warranty covers the Power Wheels® ride-on vehicle (purchased from Power Wheels®) against defects in materials and workmanship. The six month limited warranty applies only to the 12 volt battery included by Power Wheels® with the original purchase of the vehicle.

This warranty covers normal use and does not cover the Power Wheels® vehicle or battery if damaged by unreasonable use, neglect, accident, abuse, misuse, improper service or other causes not arising out of defects in materials or workmanship. Evidence of any attempt at consumer repair will void this warranty. THIS WARRANTY DOES NOT COVER, AND IS INTENDED TO EXCLUDE, ANY LIABILITY ON THE PART OF POWER WHEELS®, WHETHER UNDER THIS WARRANTY OR IMPLIED BY LAW FOR ANY INDIRECT OR CONSEQUENTIAL DAMAGES FOR BREACH OF WARRANTY. SOME STATES DO NOT ALLOW THE EXCLUSION OR LIMITATION SO THIS LIMITATION MAY NOT APPLY TO YOU.

Should you need service or assistance with your vehicle during the warranty period, do not return the vehicle to the store. Power Wheels® has provided a nationwide network of authorized service centers. If there is not an authorized service center in your area, please visit us on-line at **www.powerwheels.com** or call Consumer Relations for information, **1-800-348-0751**.

This warranty gives you specific legal rights, and you may also have other rights which may vary from state to state.

**PLEASE SAVE YOUR ORIGINAL SALES RECEIPT.**

# Before first-time use, you must charge the battery 18 hours!

Charge the battery immediately after each use.

Charge the battery once a month, even if the vehicle is not used or stored.

# Do not return your vehicle to the store!

We're a toll-free phone call away, and we can help.
If you are missing parts or need assistance, please call:

## 1-800-348-0751

**9 AM - 7 PM (EST) Monday through Friday and 11 AM - 5 PM (EST) Saturday.**

Or contact your local **independently owned and operated** Power Wheels® Authorized Service Center.

For the location nearest you, visit us on-line at **www.powerwheels.com**.

Consumer inquiries should be directed to Fisher-Price, Inc./Power Wheels, 636 Girard Avenue, East Aurora, NY 14052.
Fisher-Price, Inc., a subsidiary of Mattel, Inc., East Aurora, New York 14052 U.S.A.
©2008 Mattel, Inc. All Rights Reserved. ® and ™ designate U.S. trademarks of Mattel, Inc.
Fisher-Price and Power Wheels are U.S. trademarks of Mattel, Inc.

**PRINTED IN MEXICO** **M7873pr-0920**