This Owner's Manual is provided and hosted by Appliance Factory Parts.

Appliance Factory Parts
Experts in BBQ, Humidifier, & Appliance Parts
1-800-955-7075

FISHER PRICE H0440 Owner's Manual

Shop genuine replacement parts for FISHER PRICE H0440

Find Your FISHER PRICE Ride On Parts - Select From 999 Models

-------- Manual continues below --------

Cadillac ESCALADE

CUSTOM EDITION

Please read this manual and save it with your original sales receipt.

Tools needed for assembly: Phillips Screwdriver (not included); Assembly Tool (included). Use only with a Power Wheels® 12 Volt Lead Acid Rechargeable Battery with Built-in Thermal Fuse and Power Wheels® 12 Volt Charger with Type 12V Connector (both included). Requires four "C" (LR14) alkaline batteries for FM Radio/Simulated CD Player/Digital Clock/Microphone operation.

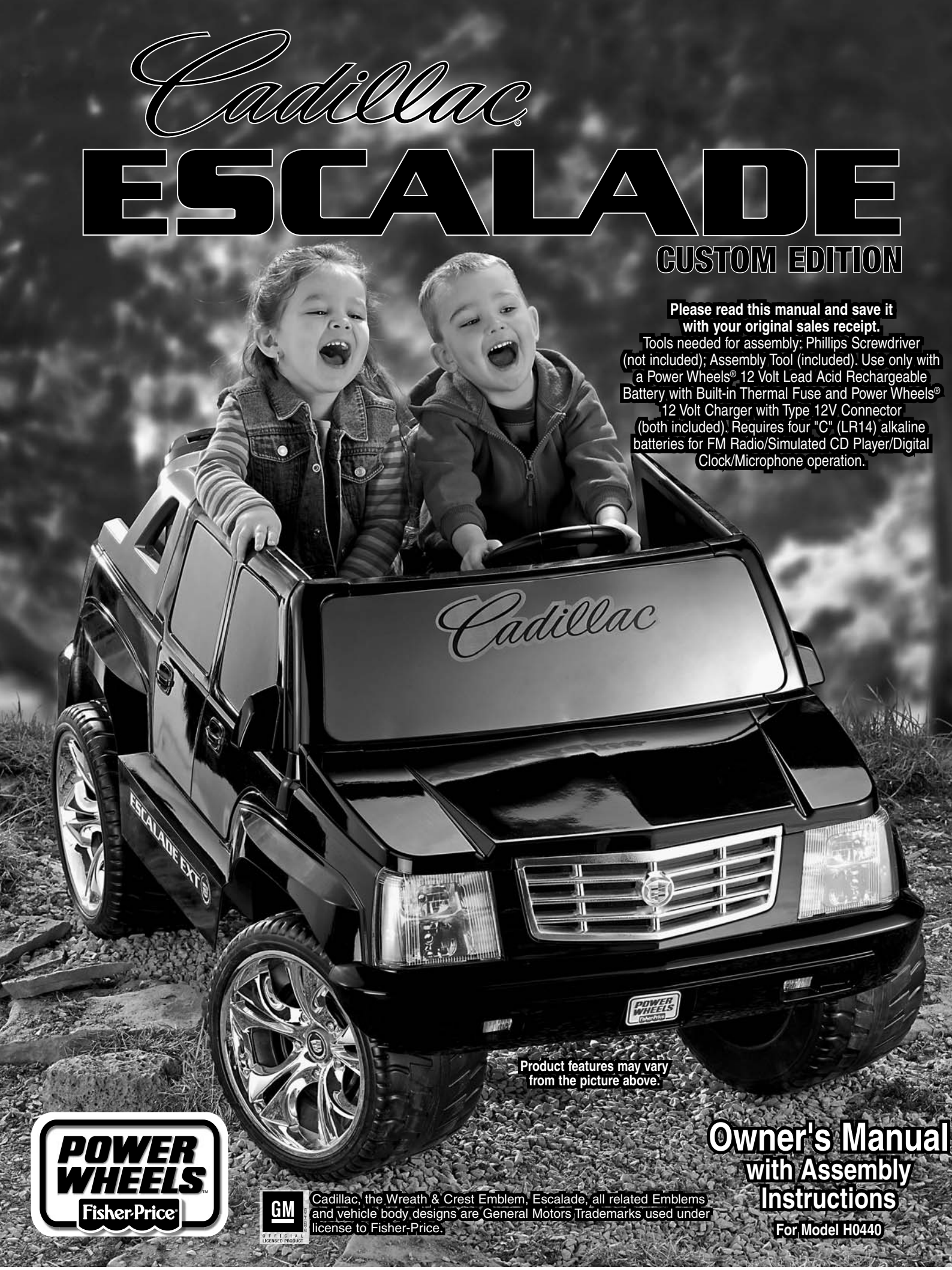

Product features may vary from the picture above.

POWER WHEELS™ Fisher-Price®

GM OFFICIAL LICENSED PRODUCT

Cadillac, the Wreath & Crest Emblem, Escalade, all related Emblems and vehicle body designs are General Motors Trademarks used under license to Fisher-Price.

Owner's Manual with Assembly Instructions

For Model H0440

TABLE OF CONTENTS

A Important Information 2
B Warnings and Cautions 3
C Parts 4
D Parts Picture 7
E Battery Charging 8
F Assembly 9
G Decoration 21
H Battery Installation 23
I Battery Care and Disposal 24
J Safe Driving Rules 25
K Vehicle Operation 26
L FM Radio/Simulated CD Player/Digital Clock/Microphone Use 27
M Charge Indicator 28
N Vehicle Care 28
O FCC Note 29
P Limited Warranty 29
Q Problems and Solutions Guide 30

A IMPORTANT INFORMATION

- Your new vehicle requires adult assembly. Please set aside at least 60 minutes for assembly.
- You must charge your battery for 18 - 30 hours **before you use your vehicle for the first time**. We recommend that you start charging your battery before beginning assembly. Please see Battery Charging beginning on page 8 for detailed instructions.
- Read this manual carefully for important safety information and operating instructions before using your vehicle. Keep this manual for future reference as it contains important information.
- This vehicle is designed for use on: grass, asphalt and other hard surfaces; on generally level terrain; and by children 3 years of age and older.
- Use this vehicle **ONLY** outdoors. Most interior flooring can be damaged by riding this vehicle indoors. Fisher-Price® will not be responsible for damage to the floor if the vehicle is used indoors.
- To prevent damaging the motors and gears, teach your child to stop the vehicle before switching direction. Do not tow anything behind the vehicle or overload it. Do not exceed the maximum weight capacity of 130 lbs (59 kg).
- This vehicle has adjustable play seat belts. Please note that the adjustable seat belts are designed to be a play feature only and do not function as protective safety restraints.
- For safety reasons, your vehicle has been pre-set so that it will only operate at low speed. **You must remove the high speed lock-out screw to allow operation of the vehicle at high speed. Please see page 26 for detailed instructions.**
- If you have any questions about your Power Wheels® vehicle, please call our toll-free service lines at **1-800-348-0751** from 9 AM to 7 PM (EST) Monday through Friday and 11 AM to 5 PM (EST) Saturday. Trained customer service representatives are available to take your call in English or French. Habla Español? Si usted tiene alguna pregunta ó necesita asistencia llame gratis **1-800-348-0755** para los Estados Unidos. Tenemos representantes que hablan español para atender su llamada.
- For your convenience, Power Wheels® maintains an **independently owned and operated** Authorized Service Center Network with more than 300 authorized service centers nationwide. Our authorized service centers will repair or replace parts under warranty at no extra charge, and can perform non-warranty repairs for a minimal charge. To find the authorized service center nearest you, please visit us on-line at **www.powerwheels.com** or call **1-800-348-0751**.
- To register your vehicle, please visit us on-line at **www.powerwheels.com.**

ELECTRICAL HAZARD

⚠ WARNING

- Battery can fall out and injure a child if vehicle tips over. Always use battery retainer.
- **PREVENT FIRE**
  - Never modify the electrical system. Alterations could cause a fire resulting in serious injury and could also ruin the electrical system.
  - Use of the wrong type battery or charger could cause a fire or explosion resulting in serious injury.
  - Use of Power Wheels® components in products other than Power Wheels® vehicles could cause overheating, fire or explosion.
- The battery must be handled by adults only. The battery is heavy and contains sulfuric acid (electrolyte). Dropping the battery could result in serious injury.
- Never allow children to charge the battery. Battery charging must be done by adults only. A child could be injured by the electricity involved in charging the battery.
- Read the safety instructions on the battery.
- Examine the battery, charger and their connectors for excessive wear or damage each time you charge the battery. If damage or excessive wear is detected, do not use the charger or the battery until you have replaced the worn or damaged part.
- **HOT** motors. Handle carefully.

RIDING HAZARD

⚠ WARNING

- **Prevent Injuries and Deaths**
  - Direct Adult Supervision Required
  - Never Ride at Night.
  - Keep Children Within Safe Riding Areas.
    These areas must be:
    - away from swimming pools and other bodies of water to prevent drownings
    - generally level to prevent tipovers
    - away from steps, steep inclines, cars, roads and alleys.
  - Riding Rules
    Make sure children know and follow these rules for safe driving and riding.
    - Always sit on the seat.
    - Always wear shoes.
    - Only 2 (two) riders at a time.

⚠ CAUTION

- In the unassembled state, this package contains small parts. Adult assembly is required.
- Use the charger in dry locations only.

PARTS

- If you experience a problem with this product, or are missing a part, please call us at **1-800-348-0751**, rather than return this product to the store.
- Please identify all parts before assembly and save all packaging material until assembly is complete to ensure that no parts are discarded.

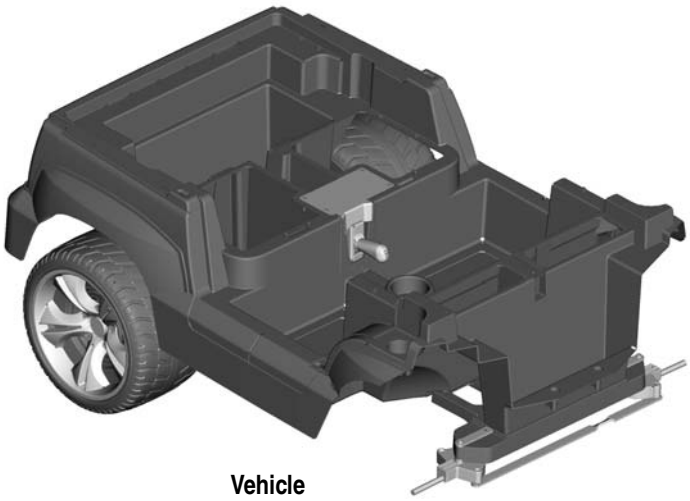

Vehicle

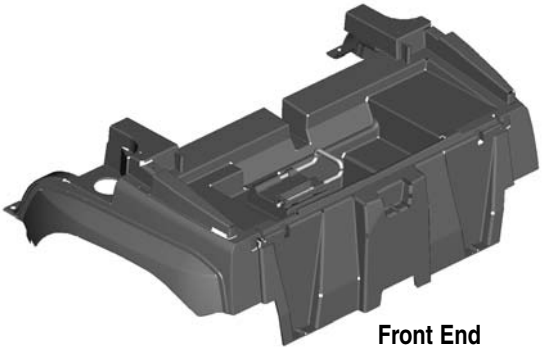

Front End

Bumper

Grille

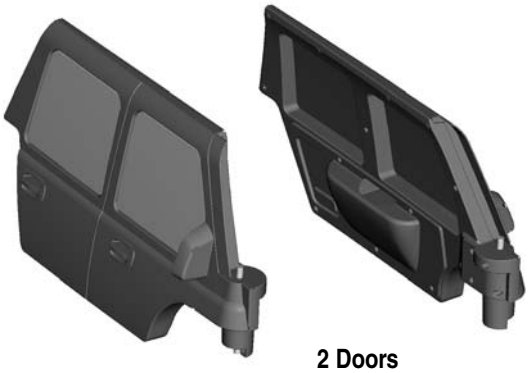

2 Doors
(Left and Right)

Seat

Windshield/Dash

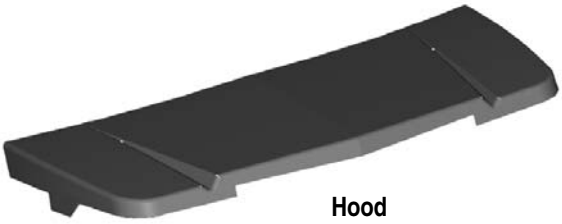

Hood

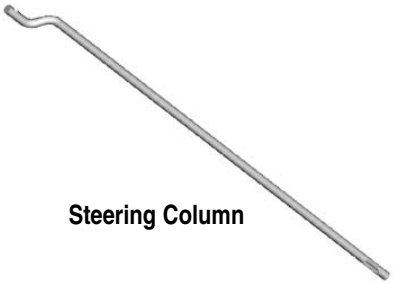

Steering Column

Steering Wheel

Steering Wheel Cap

Speaker Box Assembly

2 Headlights (Left and Right)

2 Taillights (Left and Right)

2 Front Wheels (Left and Right)

2 Wheel Covers

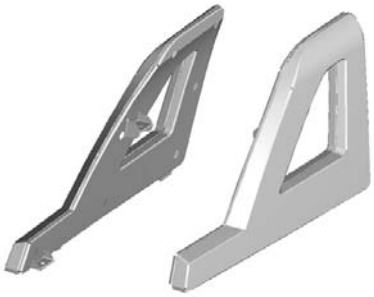

2 Wings (Left and Right)

2 Door Plates

Steering Column Cap

2 Bushings

2 Hubcaps

PARTS

2 Short Seat Belts

Long Seat Belt

Assembly Tool

Key Assembly

12 Volt Battery

12 Volt Charger

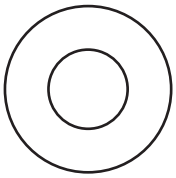

$^{7}/_{16}$" Washer – 2

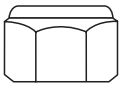

$^{3}/_{8}$" -16 Lock Nut – 2

$^{5}/_{32}$ x 1$^{1}/_{2}$" Pin – 1

#8 x $^{3}/_{4}$" Screw – 37

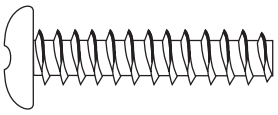

$^{1}/_{4}$ x 1$^{1}/_{4}$" Screw – 2

For your convenience, we included extra fasteners!

Note: Tighten and loosen all screws with a Phillips screwdriver. Do not over-tighten the screws.

Fasteners Shown Actual Size

Note: Some parts shown are assembled on both sides of the vehicle.

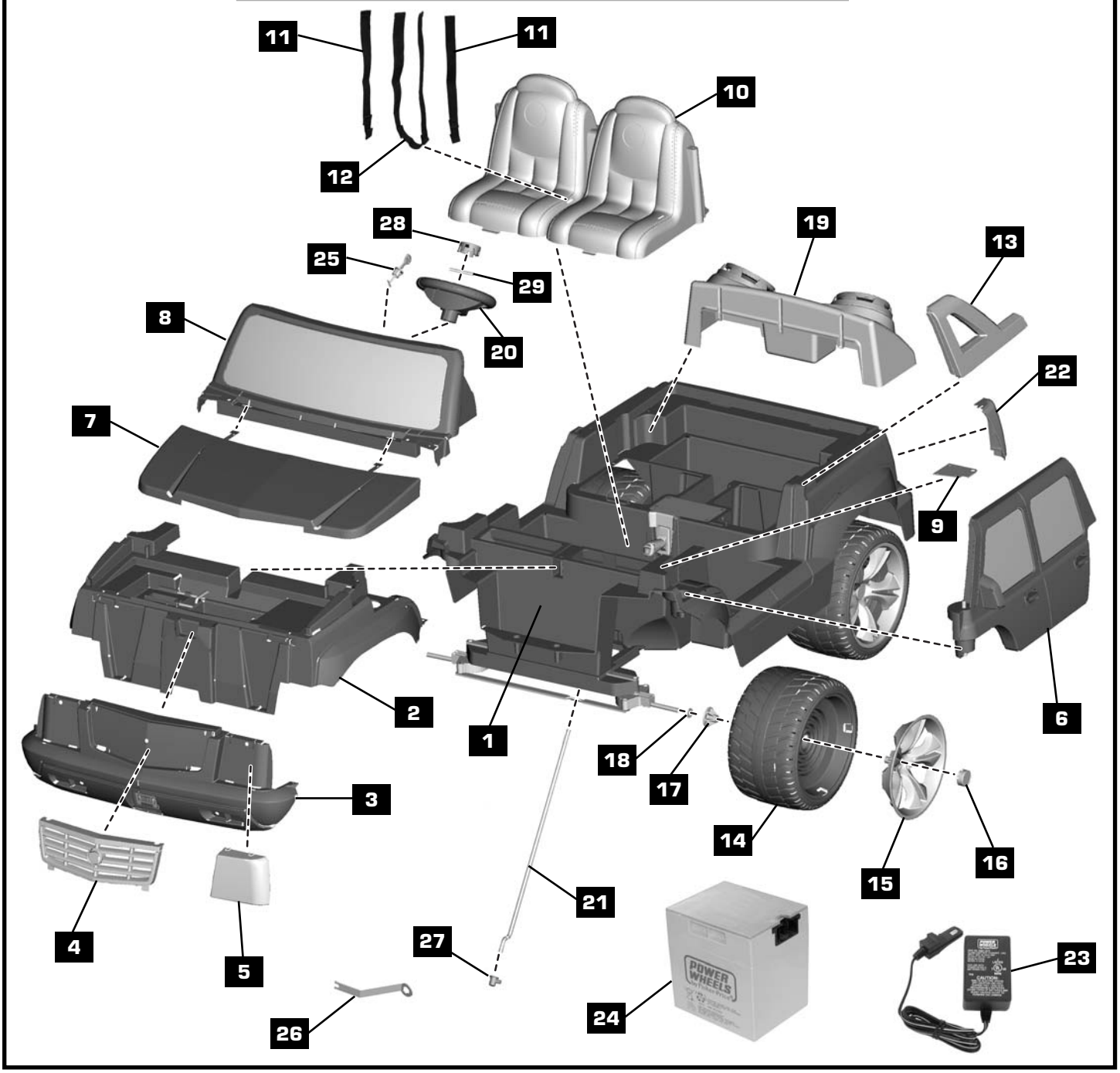

1	Vehicle	9	Door Plates - 2	17	Bushing - 2	25	Key Assembly		Parts Not Shown
2	Front End	10	Seat	18	$^{7}/_{16}$" Washers - 2	26	Assembly Tool		$^{3}/_{8}$"-16 Lock Nuts - 2
3	Bumper	11	Short Seat Belts - 2	19	Speaker Box Assembly	27	Steering Column Cap		$^{1}/_{4}$" x 1$^{1}/_{4}$" Screws - 2
4	Grille	12	Long Seat Belt	20	Steering Wheel	28	Steering Wheel Cap		#8 x $^{3}/_{4}$" Screws - 37
5	Headlights - 2	13	Wings - 2	21	Steering Column	29	$^{5}/_{32}$" x 1$^{1}/_{2}$" Pin - 1		Label Sheet
6	Doors - 2	14	Front Wheels - 2	22	Taillight - 2				
7	Hood	15	Wheel Covers - 2	23	12 Volt Charger				
8	Windshield/Dash	16	Hubcaps - 2	24	12 Volt Battery				

ELECTRICAL HAZARD

⚠ WARNING

- Battery can fall out and injure a child if vehicle tips over. Always use battery retainer.
- **PREVENT FIRE**
  - Never modify the electrical system. Alterations could cause a fire resulting in serious injury and could also ruin the electrical system.
  - Use of the wrong type battery or charger could cause a fire or explosion resulting in serious injury.
  - Use of Power Wheels® components in products other than Power Wheels® vehicles could cause overheating, fire or explosion.
- The battery must be handled by adults only. The battery is heavy and contains sulfuric acid (electrolyte). Dropping the battery could result in serious injury.
- Never allow children to charge the battery. Battery charging must be done by adults only. A child could be injured by the electricity involved in charging the battery.
- Read the safety instructions on the battery.
- Examine the battery, charger and their connectors for excessive wear or damage each time you charge the battery. If damage or excessive wear is detected, do not use the charger or the battery until you have replaced the worn or damaged part.

⚠ CAUTION

Use the charger in dry locations only.

About Thermal Fuses

Your Power Wheels 12 volt battery is equipped with a built-in thermal fuse. The thermal fuse is a self-resetting safety device which automatically “trips” and shuts down operation of the vehicle if the vehicle is overloaded or the driving conditions too severe. Once a fuse has “tripped”, remove your foot from the pedal and wait approximately 25 seconds before operating the vehicle again. To avoid repeated automatic shut-downs, do not overload the vehicle by exceeding the 130 lbs (59 kg) maximum weight capacity or by towing anything behind the vehicle. Avoid severe driving conditions, such as driving up slopes or running into fixed objects, which can cause the wheels to stop spinning while power is still being supplied to the motors and make sure your child stops the vehicle before switching speeds or direction.

If a thermal fuse in a battery continually trips under normal driving conditions, please contact your local Power Wheels® Authorized Service Center. For the location of the Authorized Service Center nearest to you, visit us on-line at **www.powerwheels.com,** or call **1-800-348-0751.**

Important Notes

- **Your new battery must be charged for at least 18 hours before you use it in your vehicle for the first time.**
- We recommend that you start charging your battery before beginning assembly of your new vehicle.
- The battery must be upright while charging.
- The charger is not a toy.
- Do not short circuit the battery.
- You do not need to remove the battery from your vehicle to recharge it.
- Before charging the battery, examine the battery case for cracks and other damage which may cause sulfuric acid (electrolyte) to leak during the charging process. If damage is detected, do not charge the battery or use it in your vehicle. Battery acid is very corrosive and can cause severe damage to surfaces it contacts.
- Do not charge the battery on a surface (such as a kitchen counter top) which could be damaged by the acid contained inside the battery. Take precautions to protect the surface on which you charge your battery.
- Use only a Power Wheels® 12 volt charger with "12V" connector (input 120 VAC, 60 Hz, 28W with an output of 12 VDC, 1200 mA) to charge your Power Wheels® 12 volt battery.

Adults Note: Regularly examine the charger for damage to the cord, plug, housing or other parts that may result in the risk of fire, electric shock or injury. In the event of any damage, do not use the charger until the damage has been properly repaired. Please call **1-800-348-0751**.

- If your battery is old and will not accept a charge, do not leave it in the vehicle. Always remove a dead battery from the vehicle.

BATTERY CHARGING

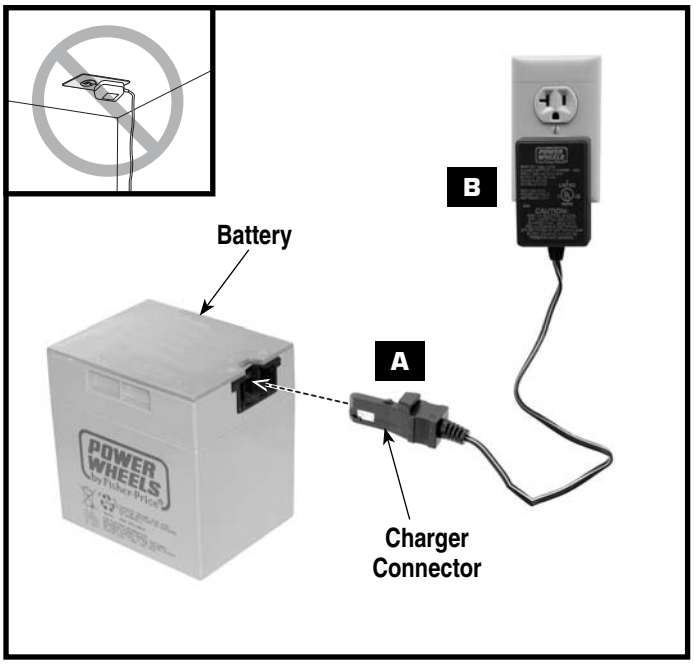

- Plug the charger connector into the battery **A**.
- Plug the charger into a standard wall outlet **B**.

Note: If power flow to the wall outlet is controlled by a switch, make sure the switch is “ON”. Use the charger only in a wall outlet. Do not plug the charger into a ceiling outlet.

- Before first-time use, charge the battery for **at least 18 hours.** Never charge the battery longer than 30 hours.
- Recharge the battery for at least 14 hours after each use of your vehicle. Do not charge the battery longer than 30 hours.
- Once the battery is charged, pull firmly on the charger connector to disconnect it from the battery. Unplug the charger from the wall outlet. The battery is now ready to be installed in your vehicle. Please see the Battery Installation section on page 23 for detailed instructions on installing your battery. If your battery is already installed in your vehicle, simply re-connect the motor harness connector to the battery. Close the hood.

ASSEMBLY

⚠ WARNING

Children can be harmed by small parts, sharp edges and sharp points in the vehicle's unassembled state, or by electrical items. Care should be taken in unpacking and assembly of the vehicle. Children should not handle parts, including the battery, or help in assembly of the vehicle.

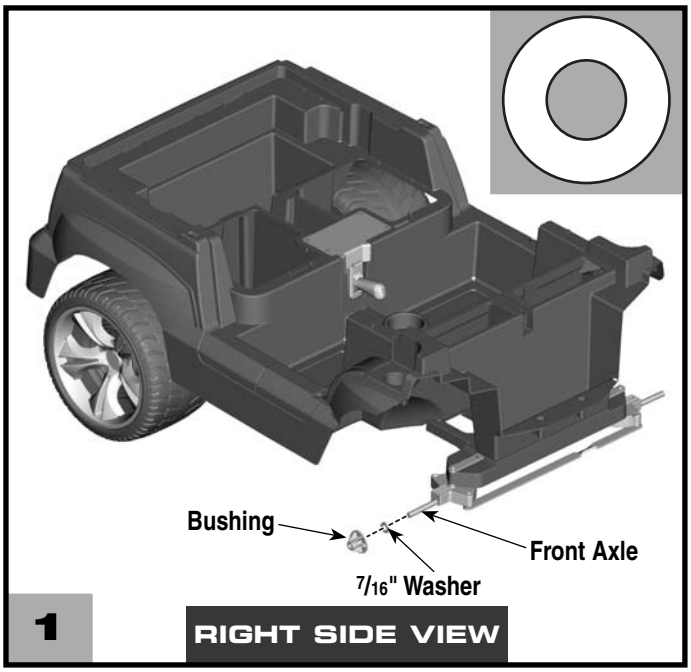

- Slide a 7/16" washer onto a front axle.
- Fit a bushing (flat side first) onto the front axle.
- Repeat this procedure to assemble the other 7/16" washer and bushing to the other front axle.

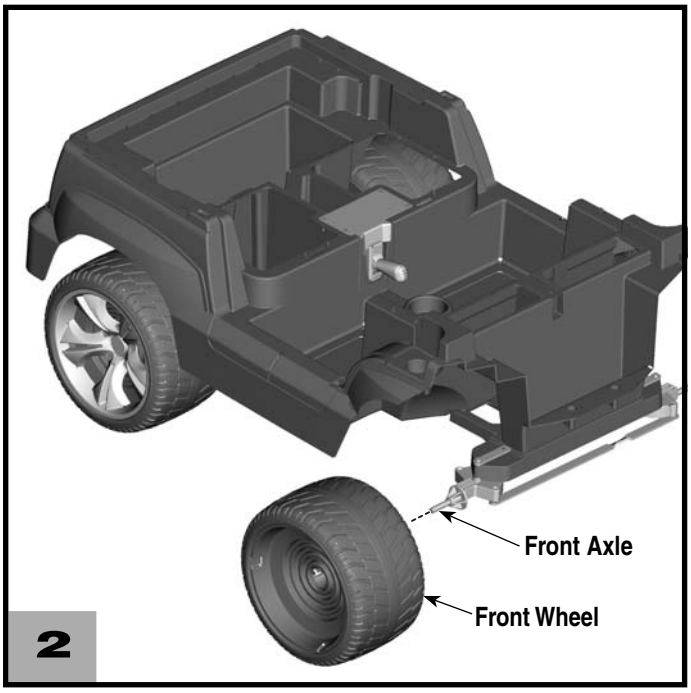

Hint: *There is a right and a left front wheel. Place the right wheel (marked R) on the passenger side of the vehicle, and the left wheel (marked L) on the driver side of the vehicle.*

- Place a front wheel onto each front axle.

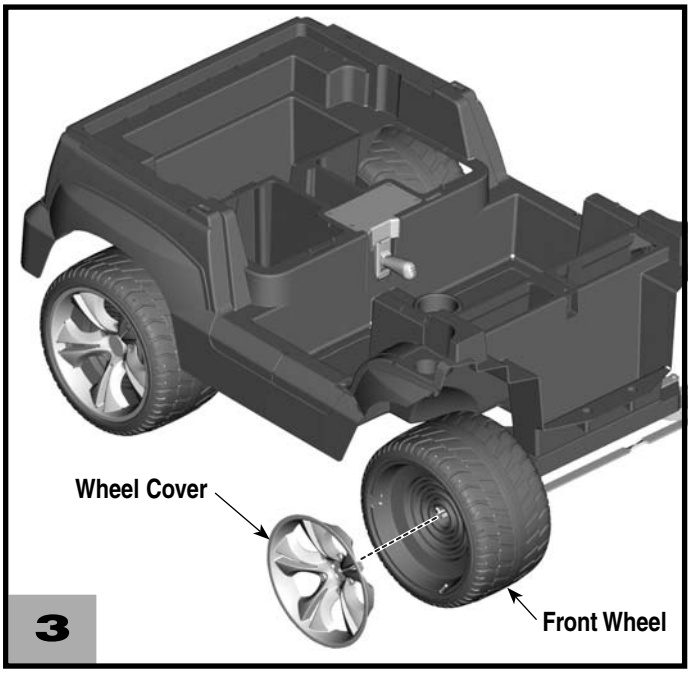

- Fit a wheel cover onto each front wheel.

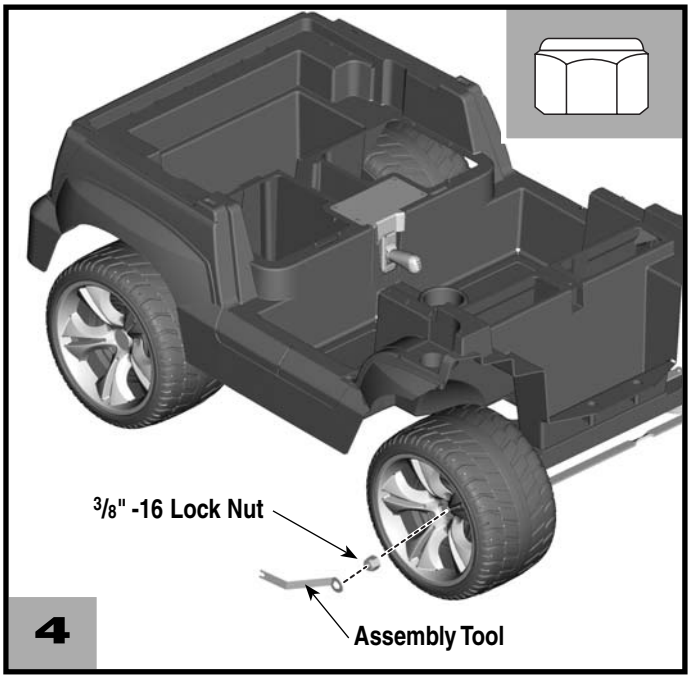

- Place a 3/8" -16 lock nut (rounded side out) onto a front axle.

IMPORTANT: Tighten the lock nut **firmly** using the closed end of the assembly tool.

- Repeat this procedure to fasten the other front wheel assembly with the other 3/8" -16 lock nut.

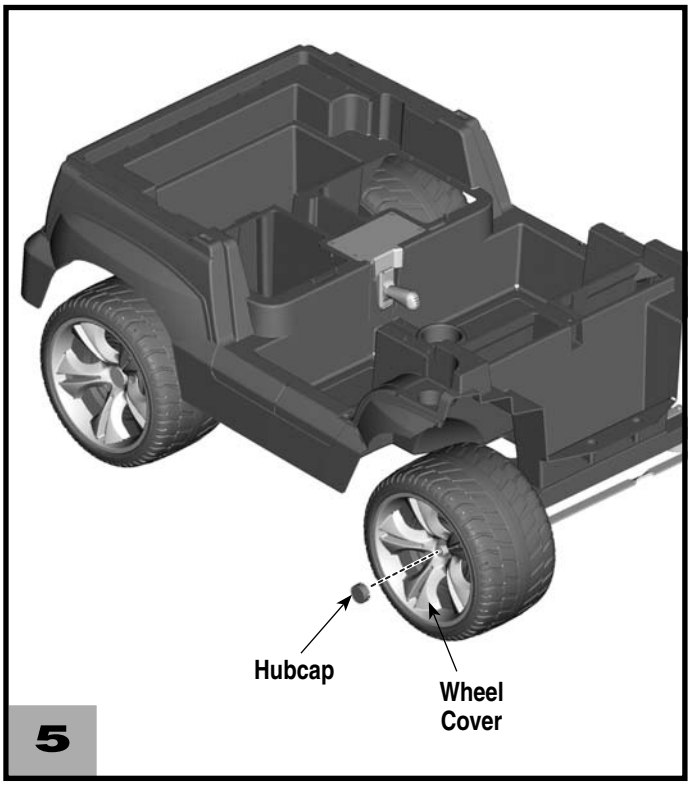

- Align the slot in a hubcap with the rib in the wheel cover. **"Snap"** a hubcap into the center of each wheel cover.

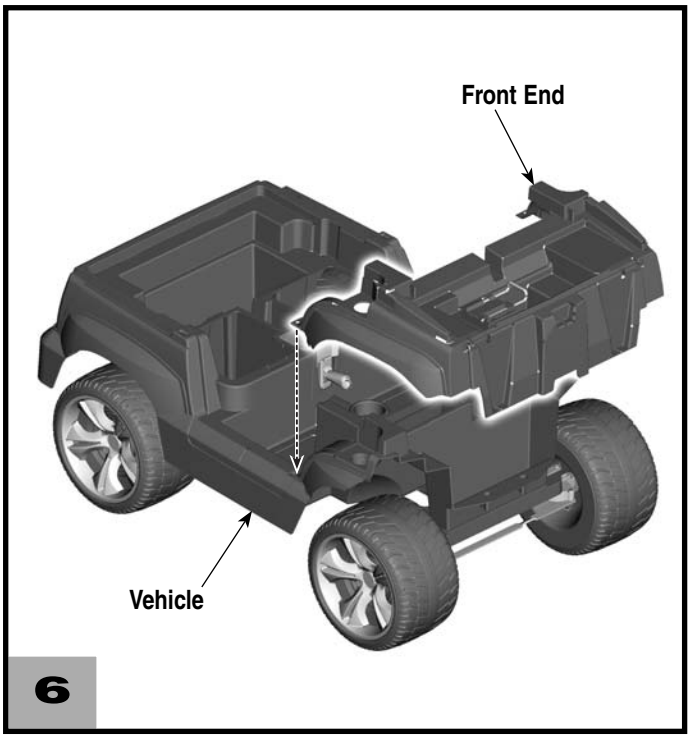

- Fit the front end onto the vehicle.
- Insert the tabs on the back edge of the front end into the slots in the vehicle.

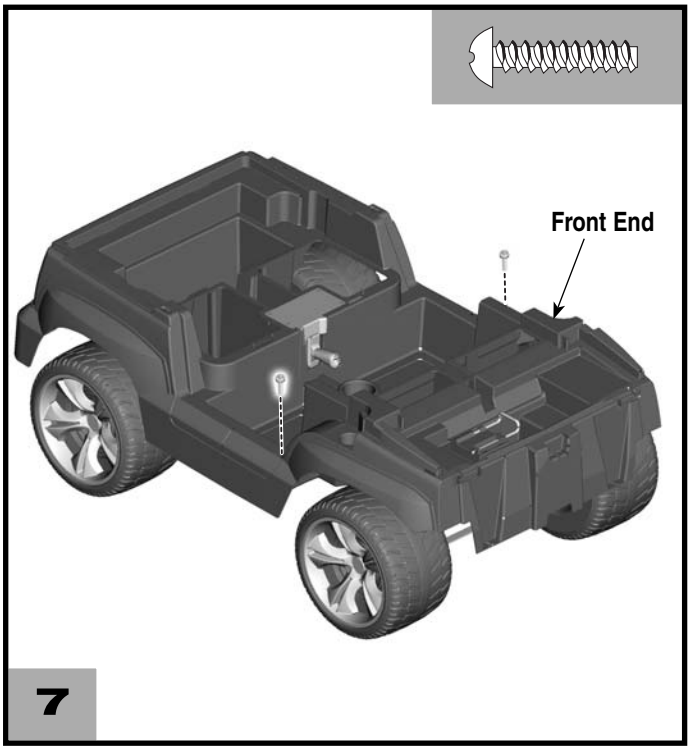

- Insert two #8 x 3/4" screws through the front end and into the vehicle. Tighten the screws.

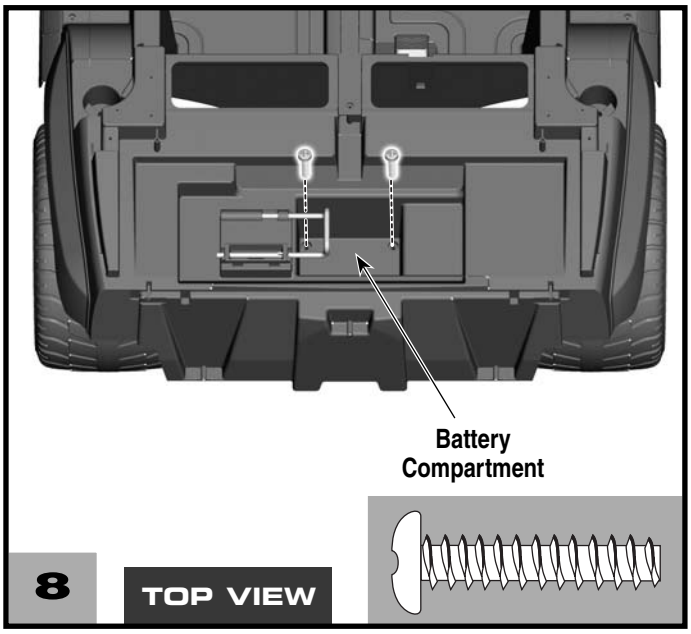

- Insert two 1/4" x 1 1/4" screws inside of the battery compartment and into the front end of the vehicle. Tighten the screws.

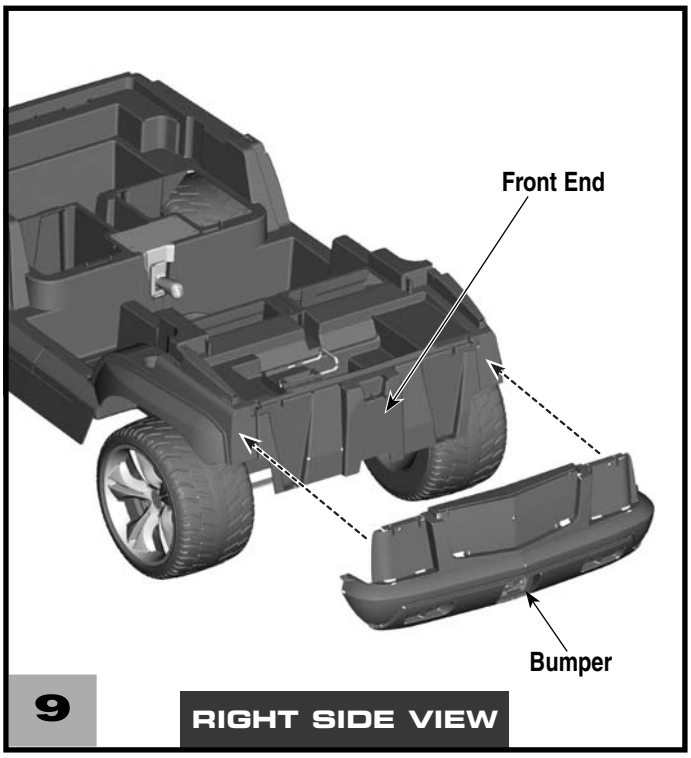

- Fit the bumper onto the front end.

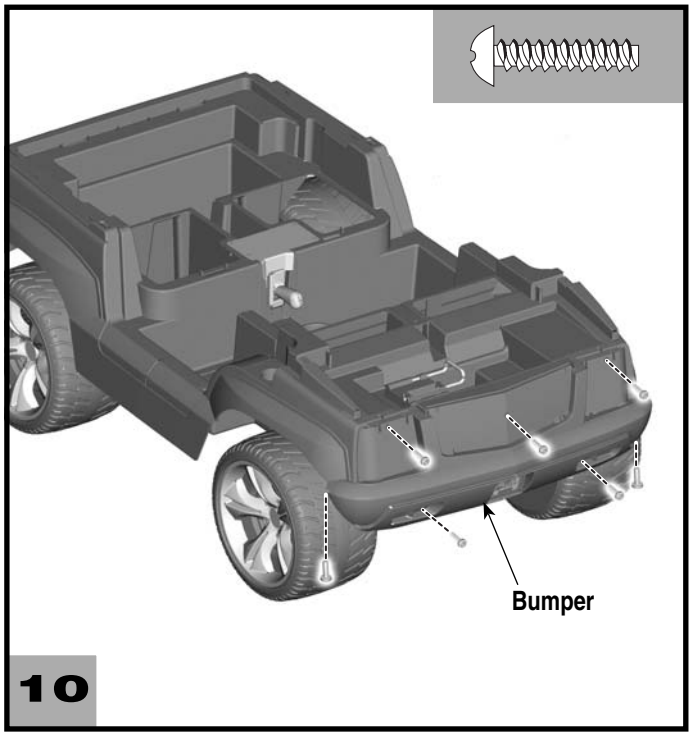

- Insert seven #8 x 3/4" screws into the bumper and tighten.

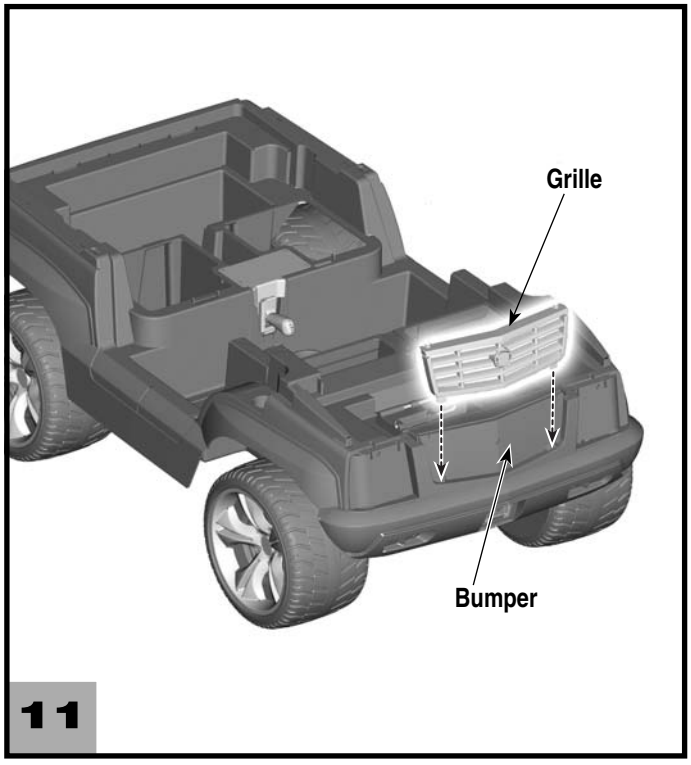

- Fit the grille onto the bumper.
- Push down to fit the tabs on the grille into the slots in the bumper.

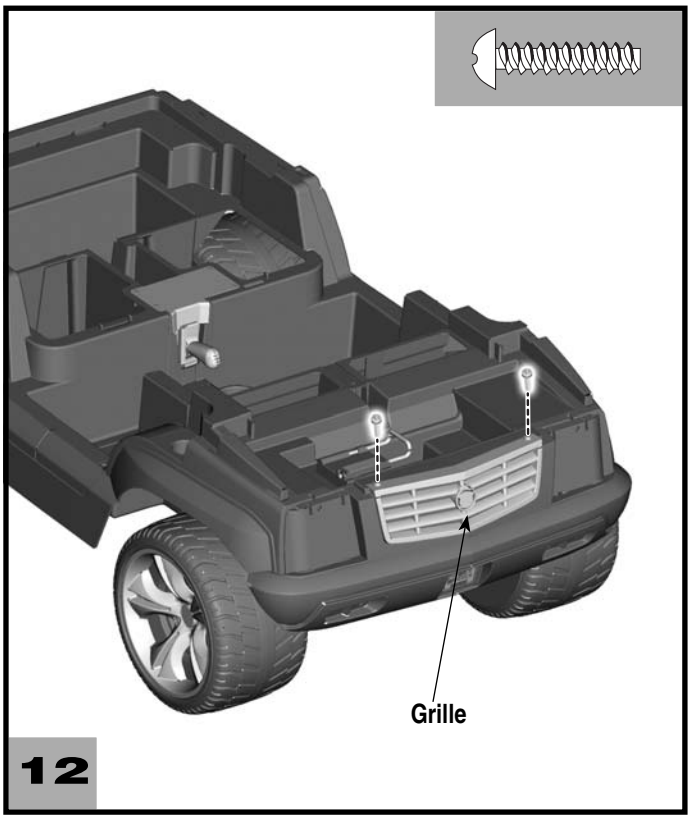

- Insert two #8 x 3/4" screws the top of the grille. Tighten the screws.

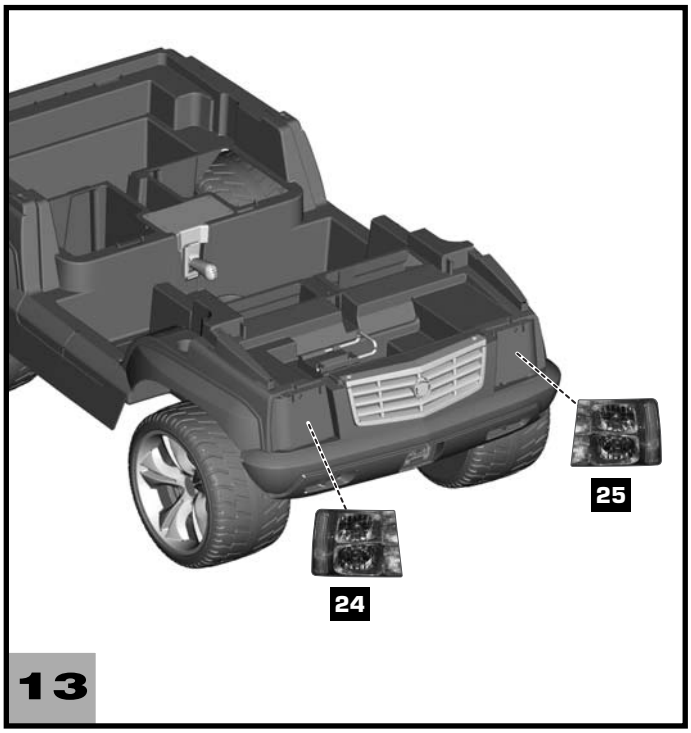

- Before applying the labels, wipe the surface of the vehicle with a clean, dry cloth to remove any dust or oils.
- Place the labels exactly as shown in the illustration.
- For best results, avoid repositioning a label once it has been applied to the vehicle.

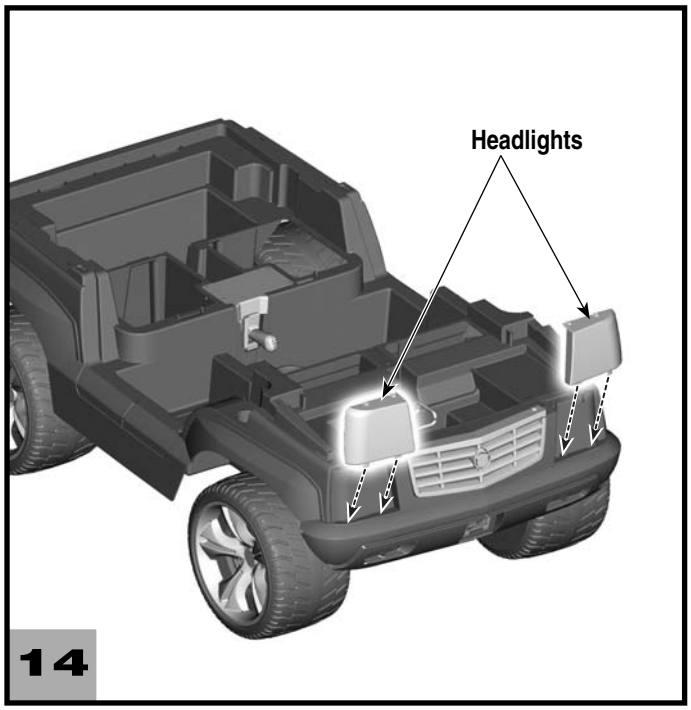

- Fit the headlights (left and right) onto the bumper.

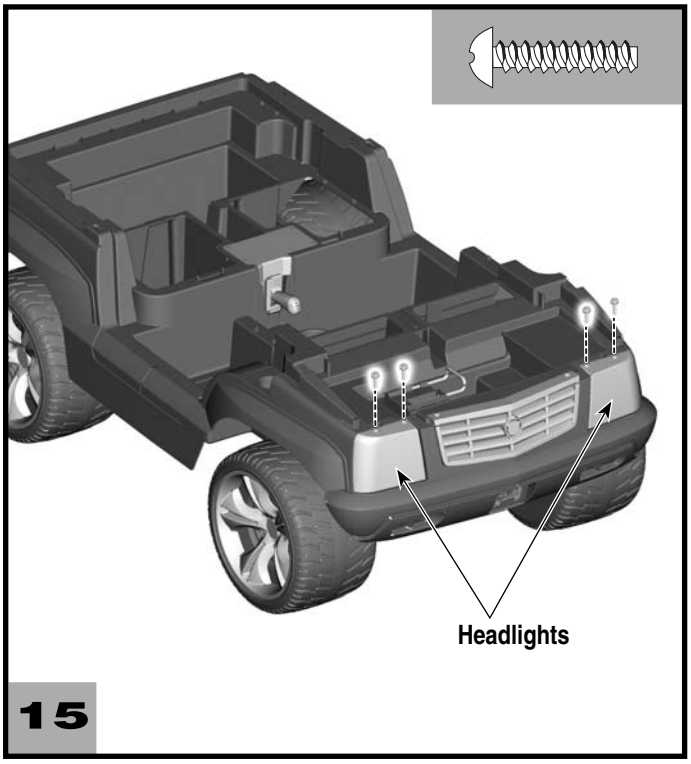

- Insert two #8 x 3/4" screws into the top edge of each headlight. Tighten the screws.

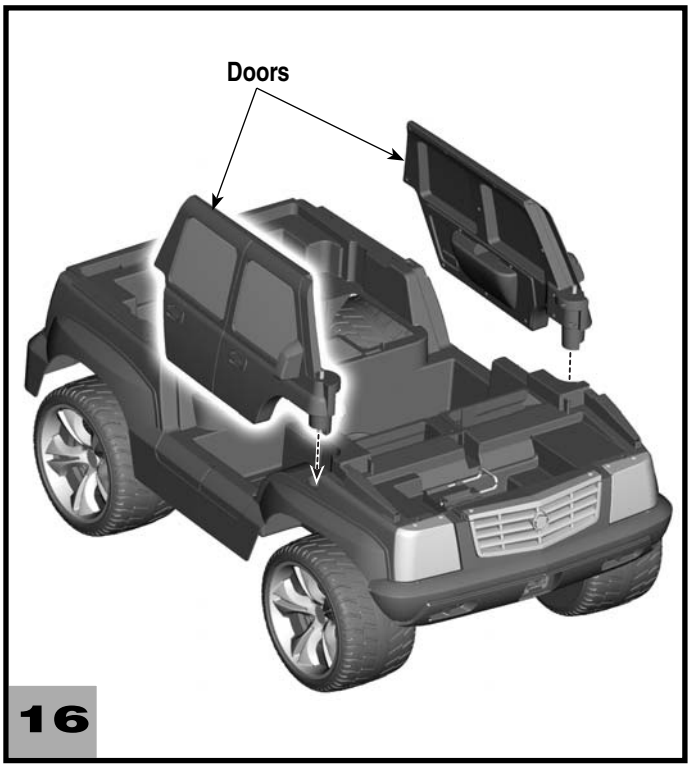

- Fit the door pegs onto the holes near the front end of the vehicle.

Hint: *There is a left and right door. They are designed to be assembled one way.*

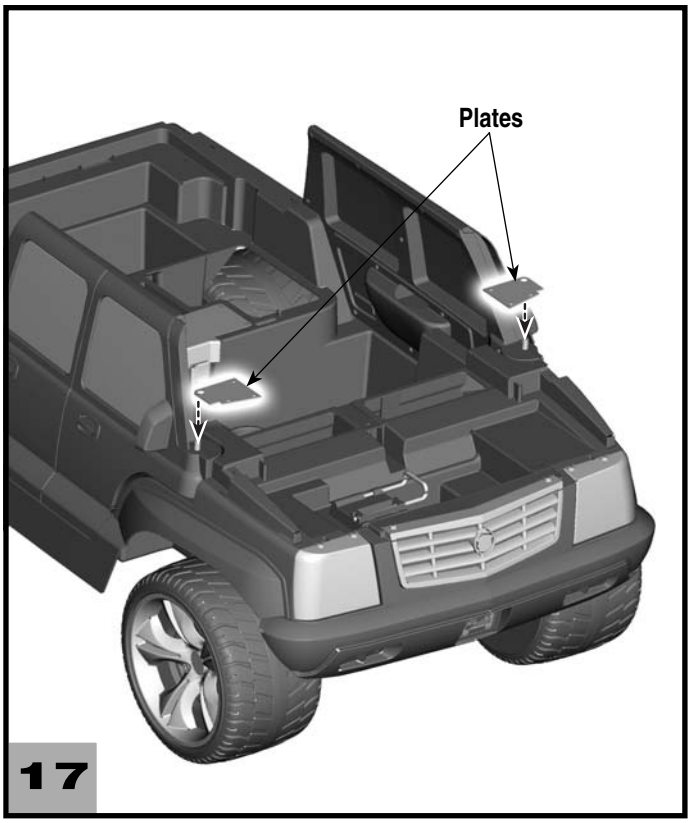

- Fit the large hole on the plates to the door posts.
- Align the holes in the plates with the holes in the top side of the vehicle.

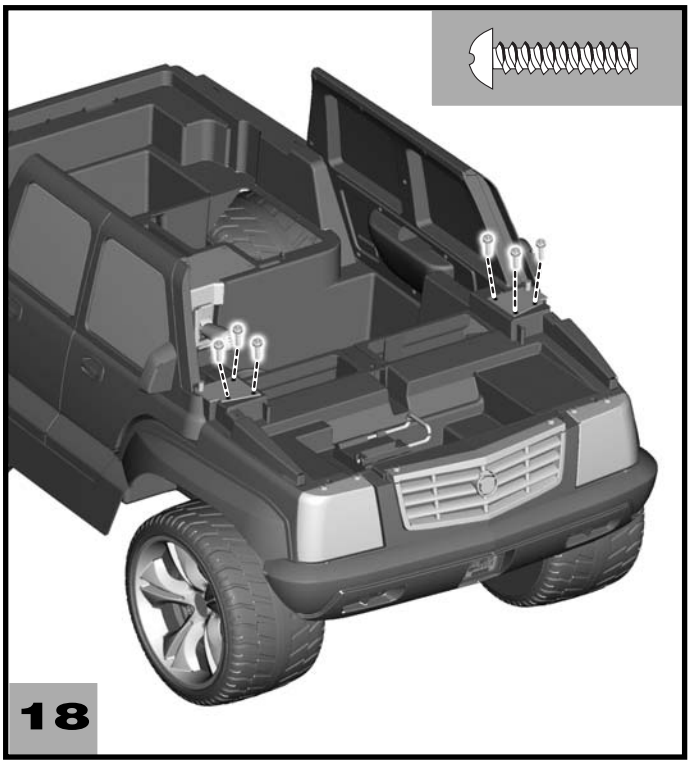

- Insert three #8 x 3/4" screws into each plate and tighten.

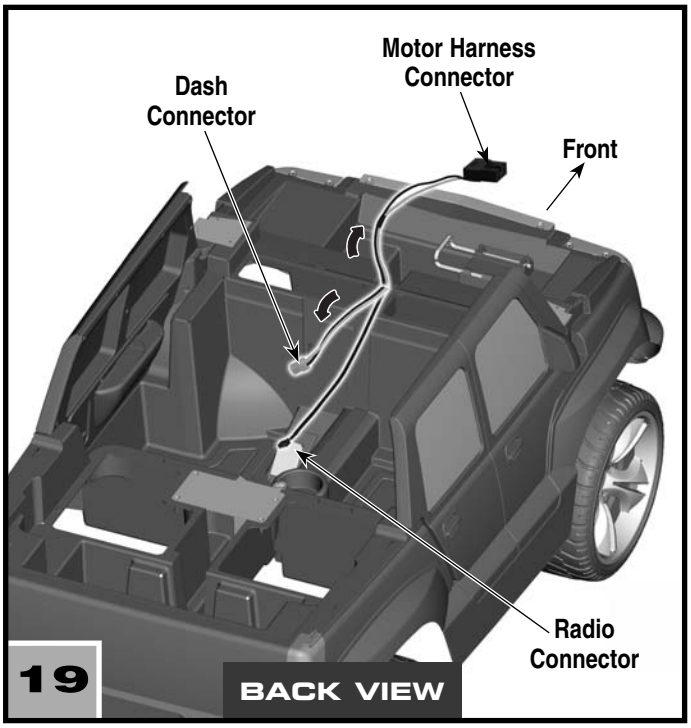

- Separate the radio and dash connector wires from the motor harness connector.
- Position the motor harness connector towards the front of the vehicle and into the battery compartment.
- Position the dash connector and radio connector wires toward the back of the vehicle.

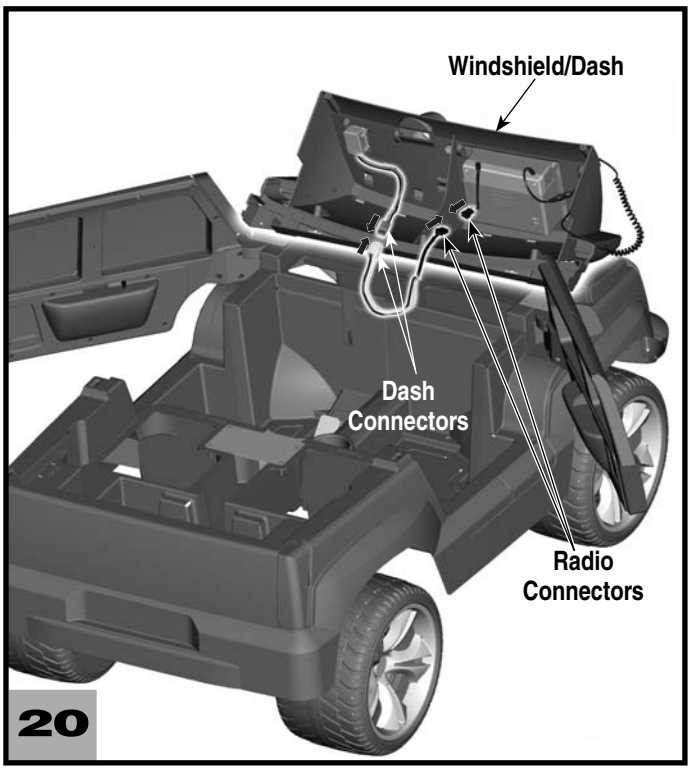

- Open the doors on the vehicle.
- Place the windshield/dash on top of the front end of the vehicle.
- Plug both dash connectors together.
- Plug both radio connectors together.

Hint: *If the connectors do not fit together, do not force them. Simply turn one of them over and try again!*

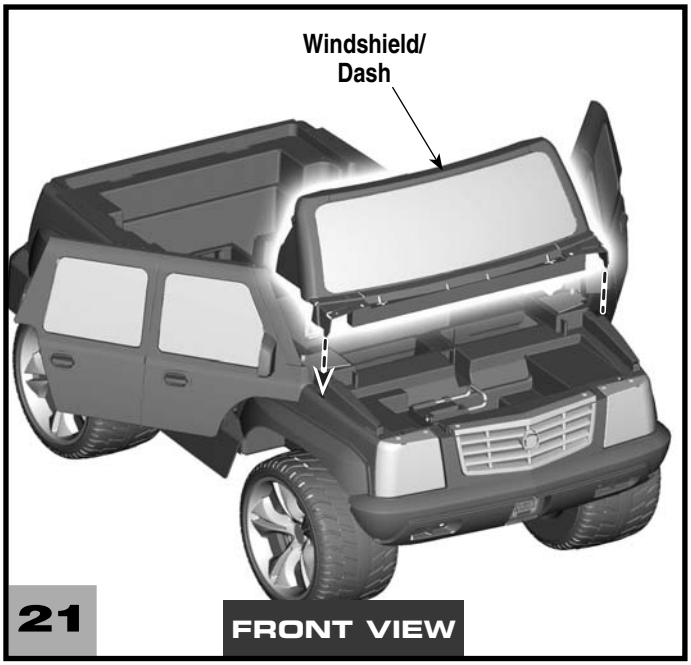

- Fit the tabs on the windshield/dash into the slots in the front end of the vehicle.

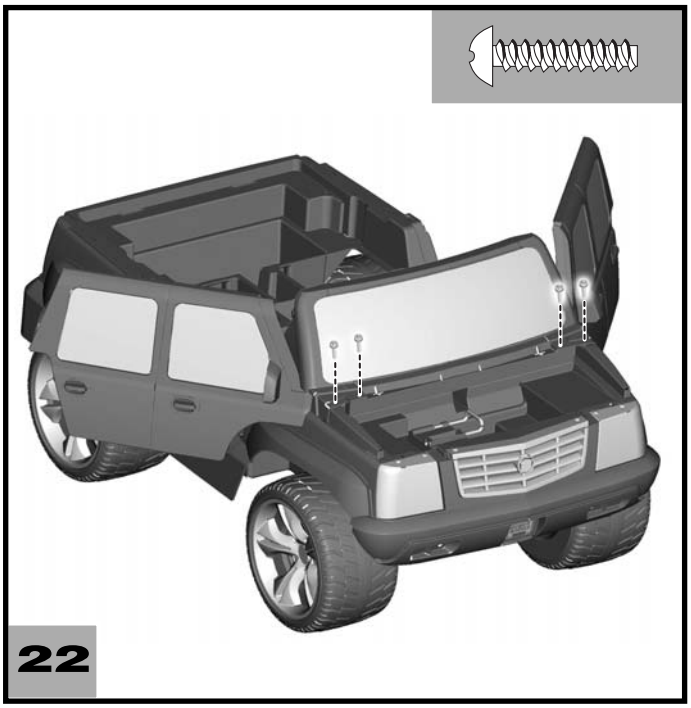

- Insert four #8 x 3/4" screws into the base of the windshield/dash. Tighten the screws.

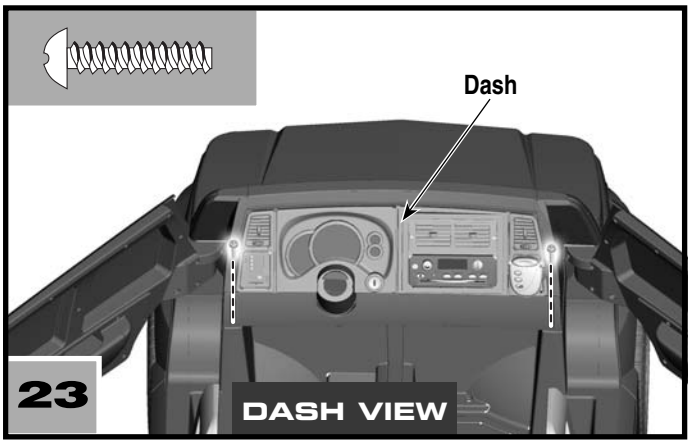

- Insert two #8 x 3/4" screws into the sides of the windshield/dash. Tighten the screws.
- Close the doors on the vehicle.

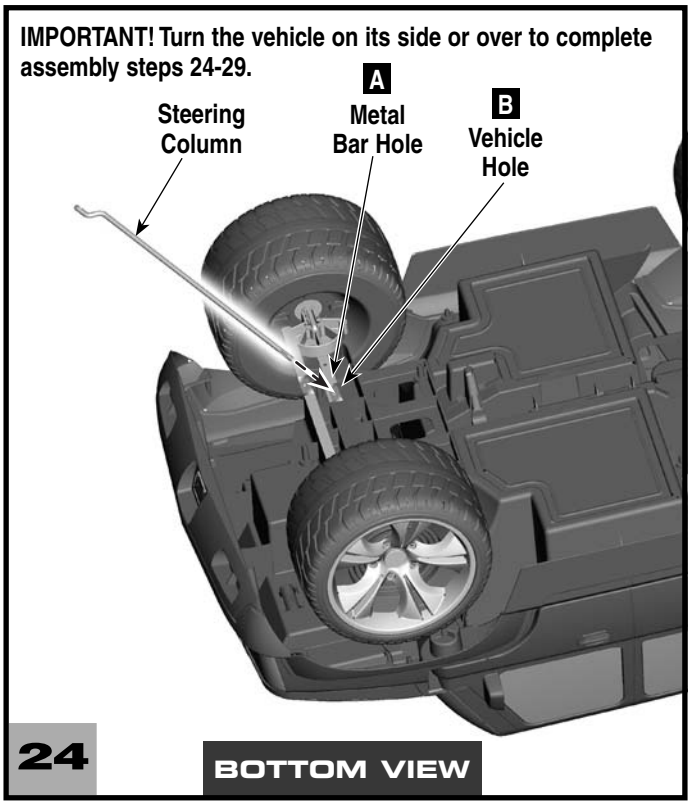

- Wipe the steering column with a paper towel to remove any excess lubricant.
- First, insert the straight end of the steering column down through the hole in the metal bar **A**; then through the hole in the vehicle floor **B**; and finally, out through the hole in the dash.

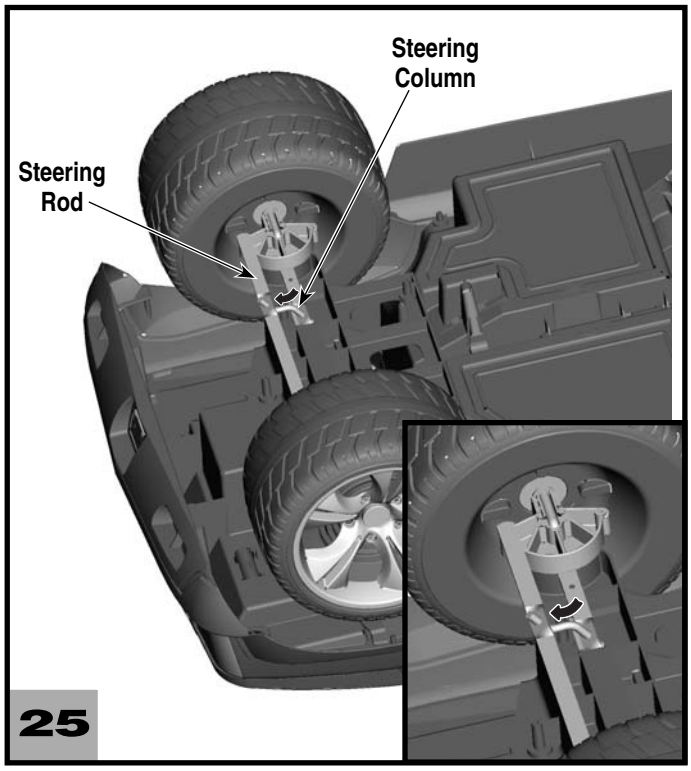

- Insert the curved end of the steering column through the hole in the steering rod.

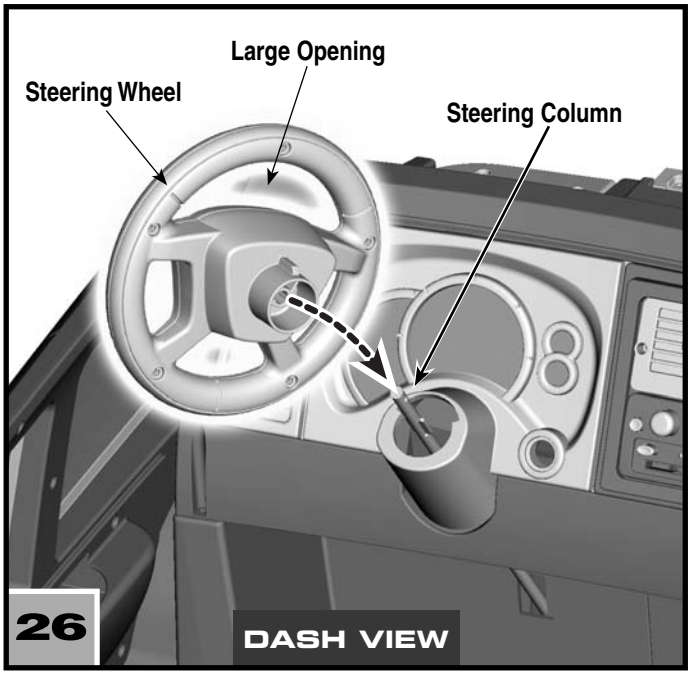

- Position the steering wheel so that the large opening is **UP**.
- Fit the steering wheel onto the steering column.

- While pressing down on the steering wheel, grasp the steering column under the dash and pull it up as far as it will go.
- Insert the $^{5}/_{32}$" x $1^{1}/_{2}$" pin through the hole in the steering column.
- Grasp the steering column again and pull down to fit the pin into the center of the steering wheel.

- Insert and "**snap**" the steering wheel cap into the center of the steering wheel.

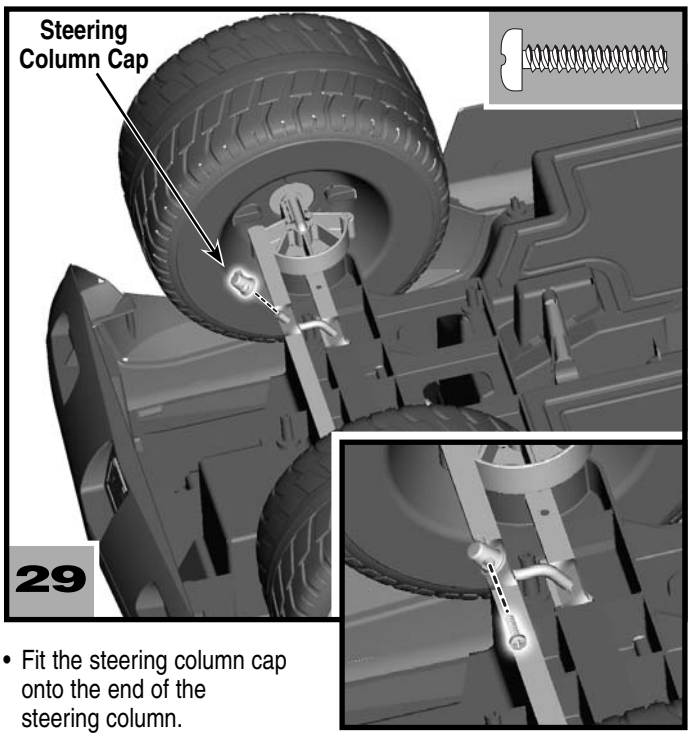

- Fit the steering column cap onto the end of the steering column.
- Insert a #8 x $^{3}/_{4}$" screw through the large opening in the steering column cap and into the hole in the steering column. Tighten the screw.
- Turn the vehicle upright.

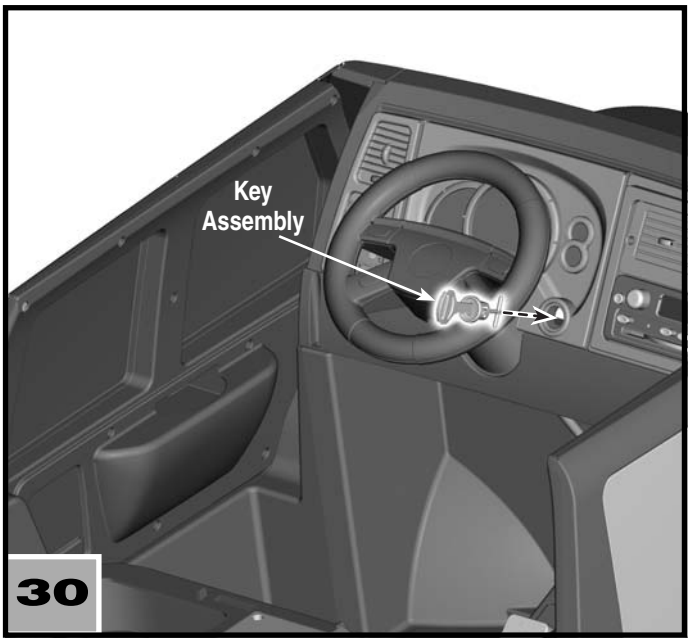

- Insert and "**snap**" the key assembly into the slot in the dash.

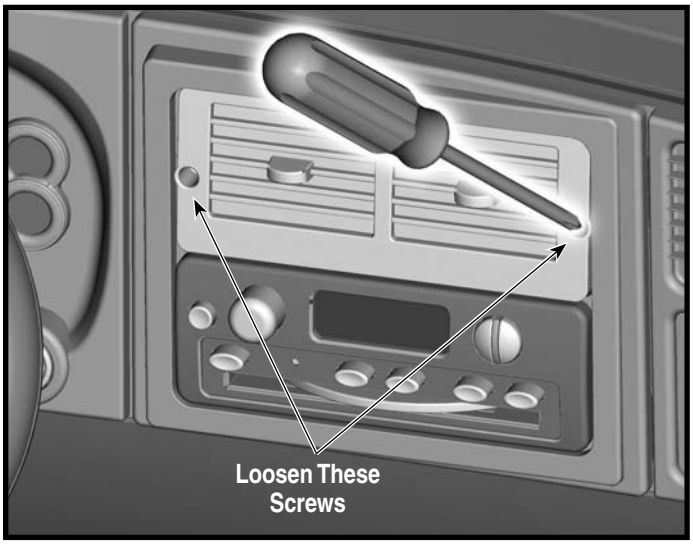

- Locate the FM Radio/Simulated CD Player/Digital Clock on the dash.
- Loosen both screws in the battery compartment door.
- Remove the battery compartment door.
- Insert four, new "C" (LR14) **alkaline** batteries.

Hint: *We recommend using* ***alkaline*** *batteries for longer life.*

- Replace the battery compartment door and tighten the screws.
- When sounds become faint or stop, it's time for an adult to change the batteries! Please refer to page 27 for general information and tips for use of the FM Radio/Simulated CD Player.

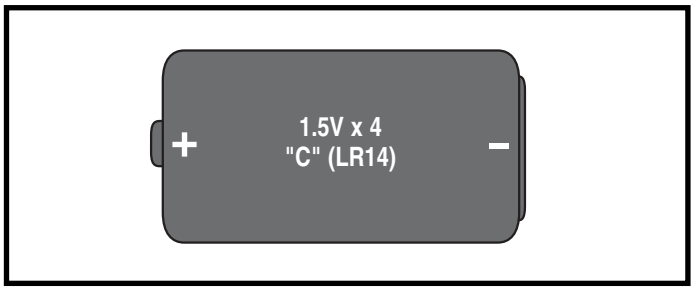

Battery Safety Information

In exceptional circumstances, batteries may leak fluids that can cause a chemical burn injury or ruin your product. To avoid battery leakage:

- Do not mix old and new batteries or batteries of different types: alkaline, standard (carbon-zinc) or rechargeable (nickel-cadmium).
- Insert batteries as indicated inside the battery compartment.
- Remove batteries during long periods of non-use. Always remove exhausted batteries from the product. Dispose of batteries safely. Do not dispose of product in a fire. The batteries may explode or leak.
- Never short-circuit the battery terminals.
- Use only batteries of the same or equivalent type, as recommended.
- Do not charge non-rechargeable batteries.
- Remove rechargeable batteries from the product before charging.
- If removable, rechargeable batteries are used, they are only to be charged under adult supervision.

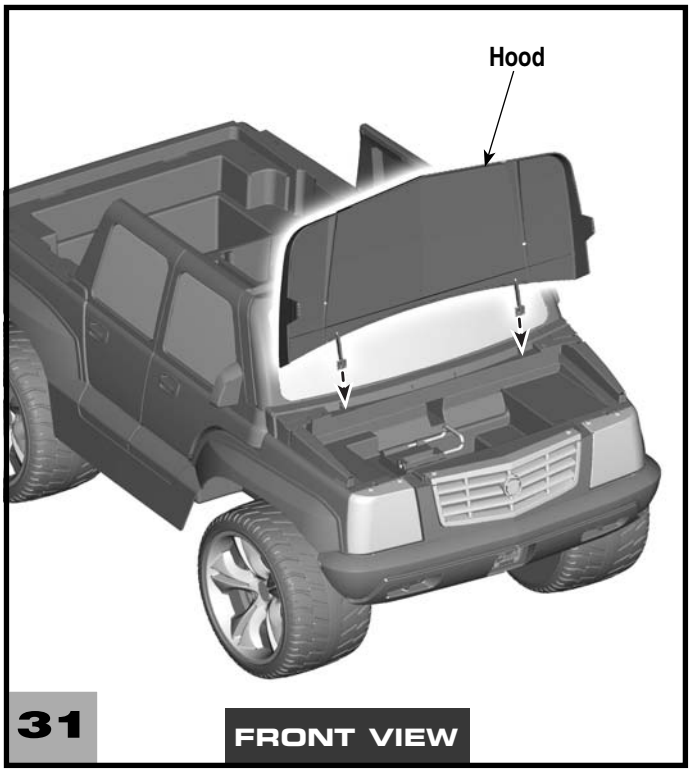

- Fit the long tabs on the hood into the slots in the front end of the vehicle.

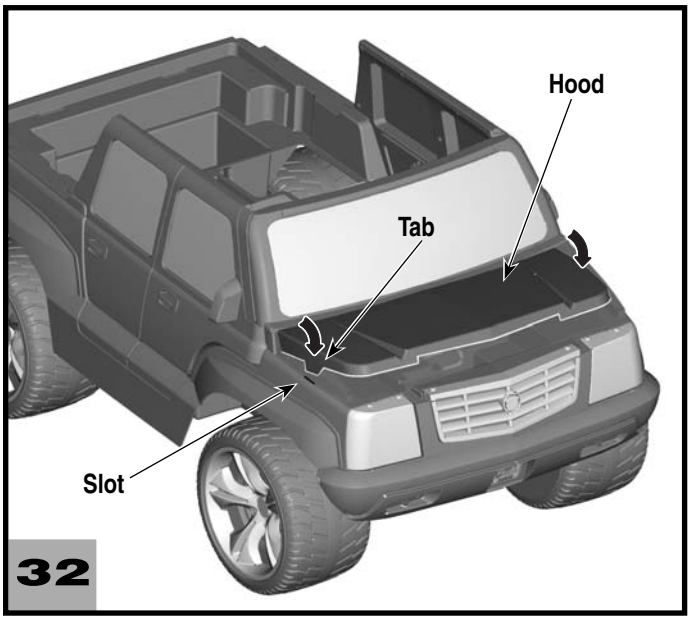

- Lower and fit the side tabs on the hood into the slots on each side of the front end of the vehicle.

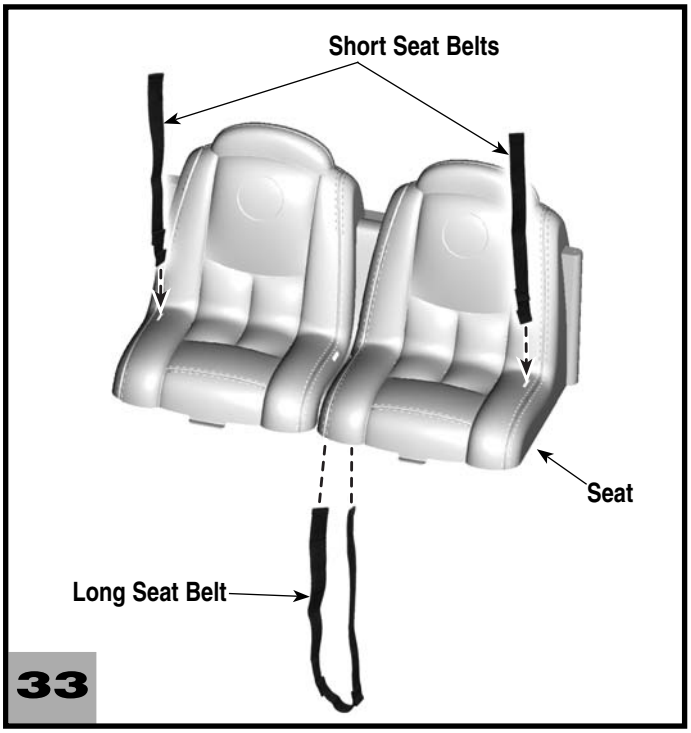

- Insert the fastener end of a short seat belt strap through the slot near the outer edge of the seat. Make sure the side of the seat belt with the fastener faces the outer edge of the seat.
- Pull the short seat belt strap completely through the slot until the last T-loop at the opposite end of the belt catches against the slot. You will pull one T-loop through the slot.
- Repeat this procedure to assemble the other short seat belt strap.
- Insert each fastener end of the long seat belt strap through a slot in the center of the seat. Make sure the fasteners face the outer edge of the seat.
- Pull each side of the long seat belt strap evenly through the slots. Make sure to pull each T-loop through a slot.

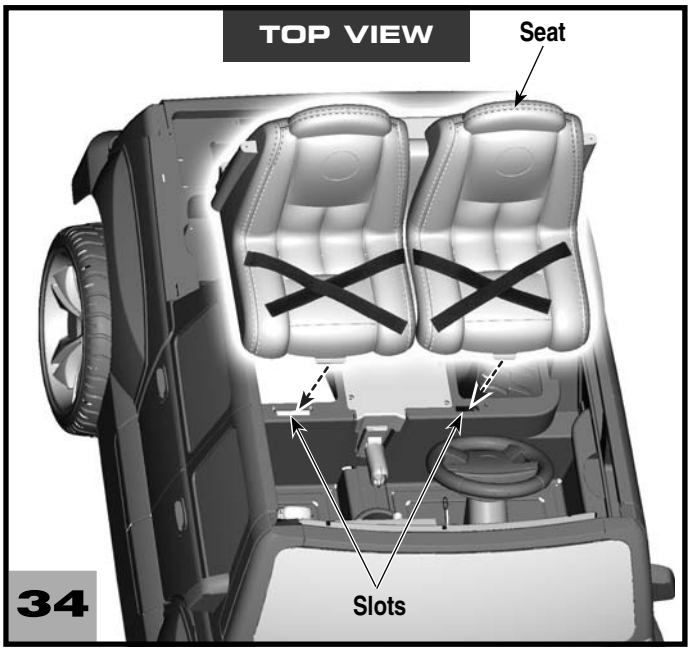

- Insert the two tabs on the front edge of the seat into the slots in the vehicle.

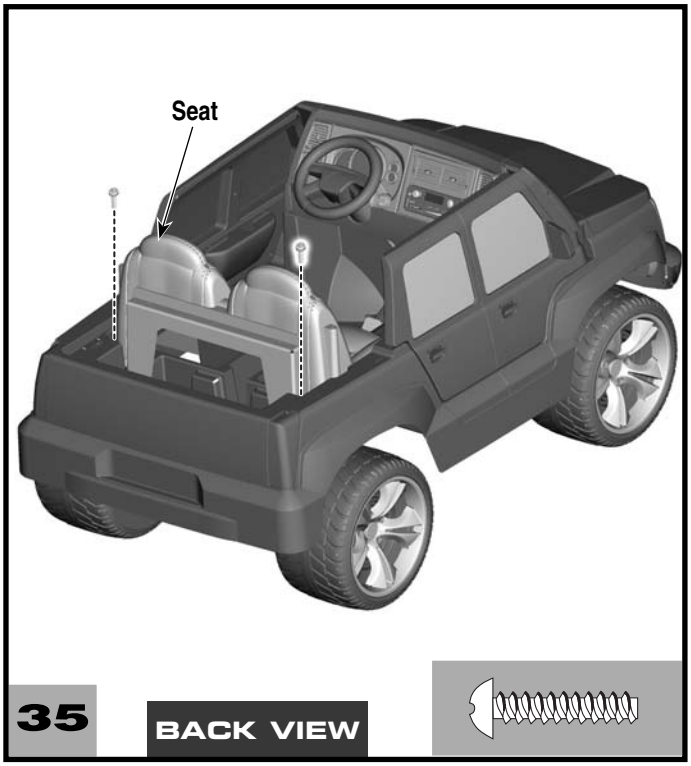

- Insert two #8 x 3/4" screws into the back of the seat. Tighten the screws.

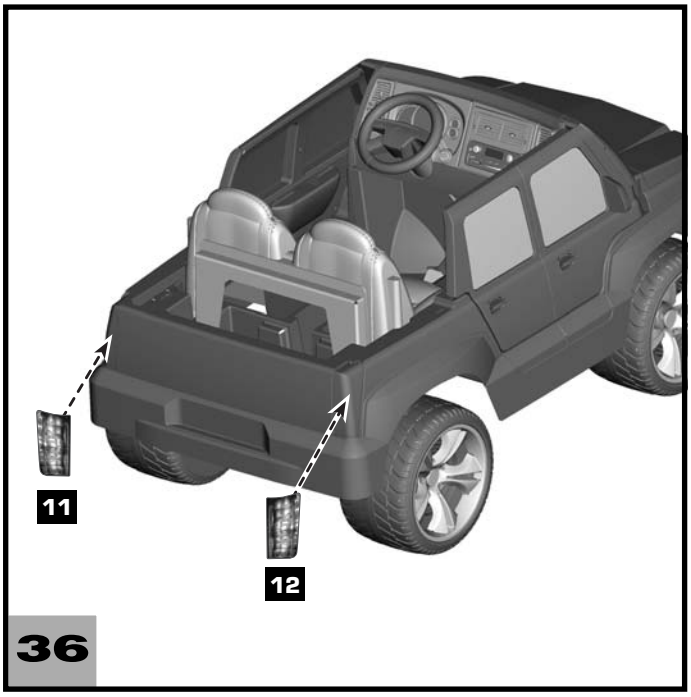

- Before applying the labels, wipe the surface of the vehicle with a clean, dry cloth to remove any dust or oils.
- First apply the inside edge of a label to the back end of the vehicle. Next, apply the outside edge of the label to the side of the vehicle. Then, smooth the center of the label. (The edges will overlap slightly.)
- For best results, avoid repositioning a label once it has been applied to the vehicle.

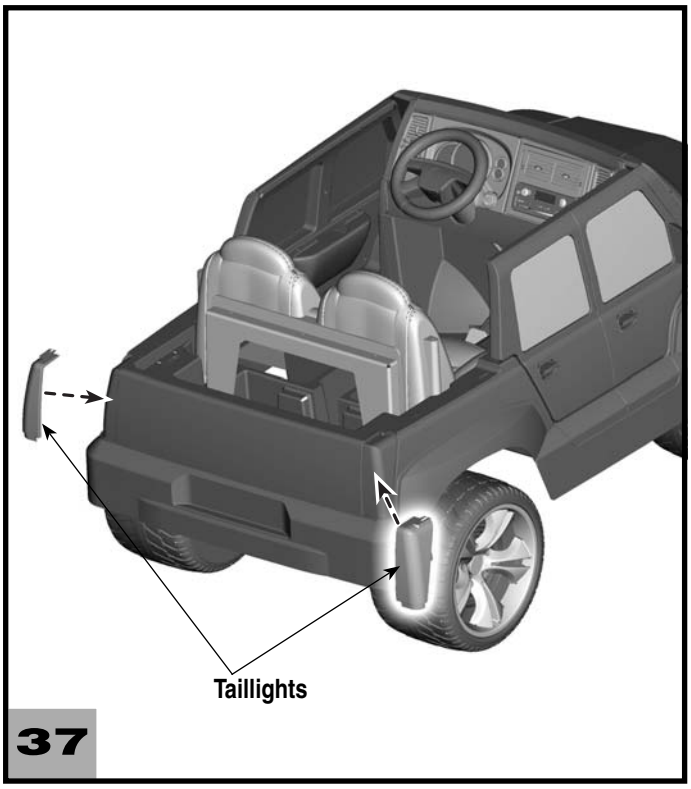

- Fit the taillights (left and right) onto the rear of the vehicle.

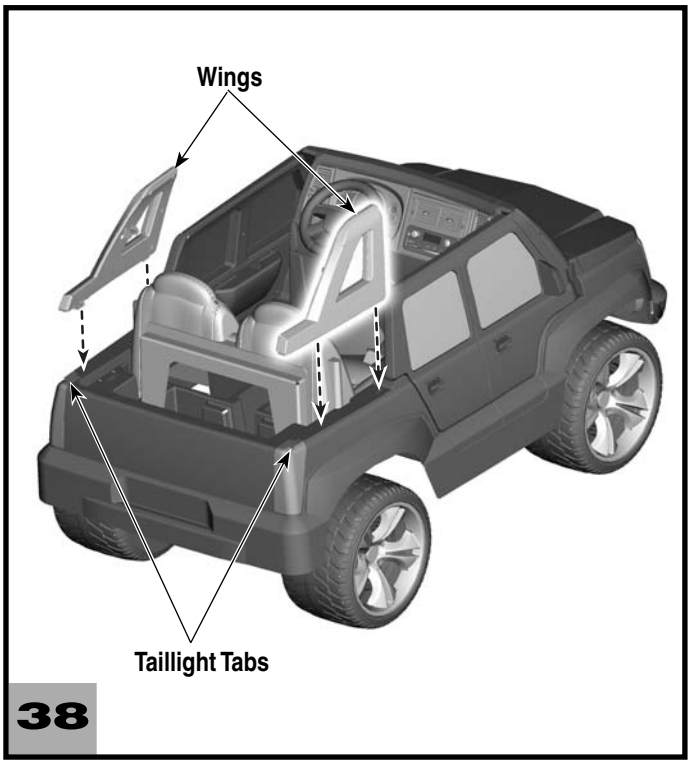

- Fit the wing tabs into the slots in the top edge near the rear of the vehicle.

Hints:

- *There is a left and right wing. They are designed to be assembled one way.*
- *Make sure the tabs on the top of the taillights fit into the bottom of each wing.*

- Insert two #8 x 3/4" screws into each wing. Tighten the screws.

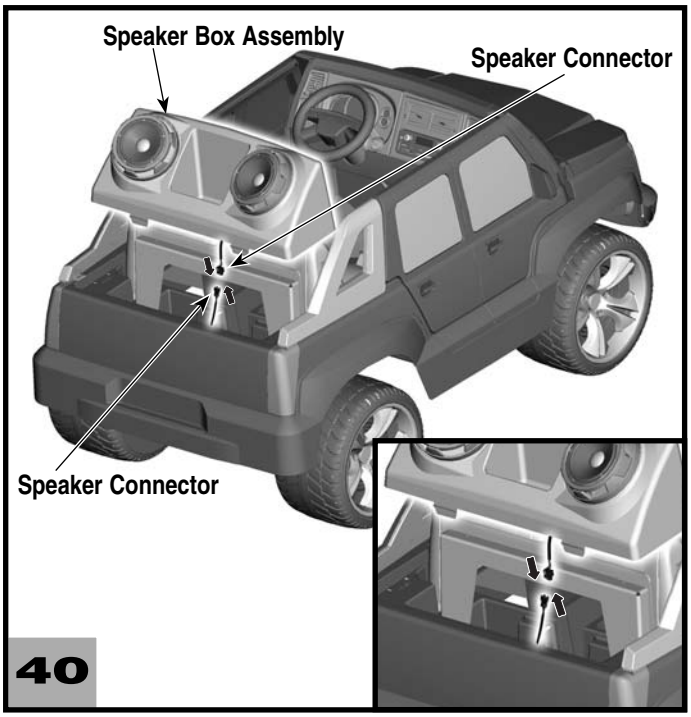

- Position the speaker box assembly over the back end of the vehicle.
- Plug both speaker connectors together.

Hint: *If the connectors do not fit together, do not force them. Simply turn one of them over and try again!*

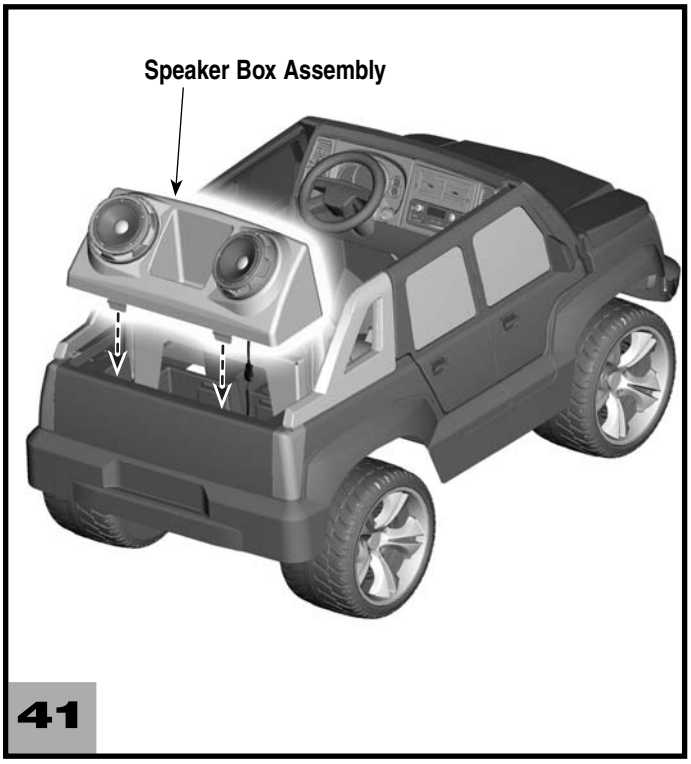

- Fit the speaker box assembly onto the vehicle.

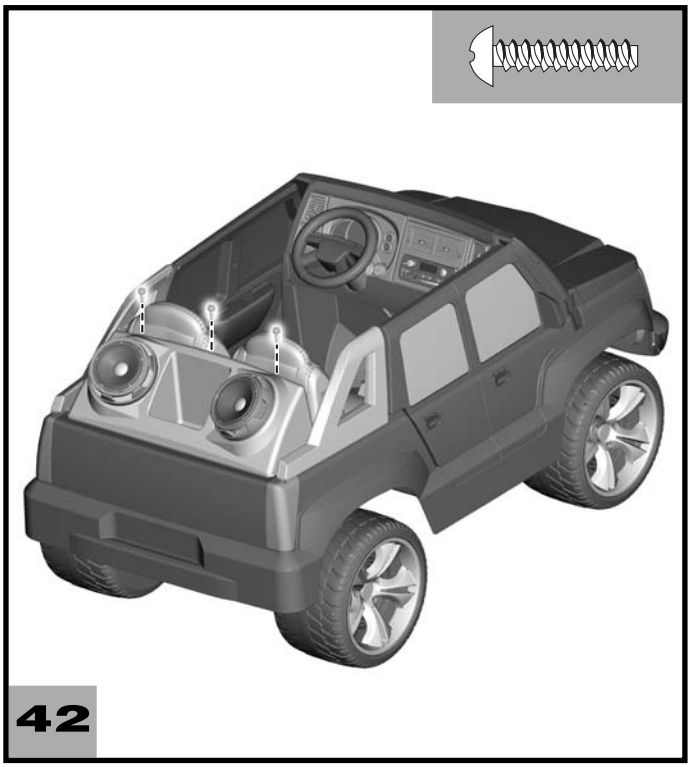

- Insert three #8 x 3/4" screws into the top of the speaker assembly. Tighten the screws.

Assembly is now complete.

Proper label application will help to keep the labels looking their best! When applying labels, keep the following guidelines in mind:

- Wash your hands before applying the labels.
- Before applying the labels, wipe the surface of the vehicle with a clean, dry cloth to remove any dust or oils.
- Place the labels exactly as shown in the illustrations.
- For best results, avoid repositioning a label once it has been applied to the vehicle.
- After applying a label, rub the label firmly with a clean, dry cloth to make sure the label is adhered to your vehicle. Start at the center of a label, and smooth towards the outer edges to remove air bubbles.

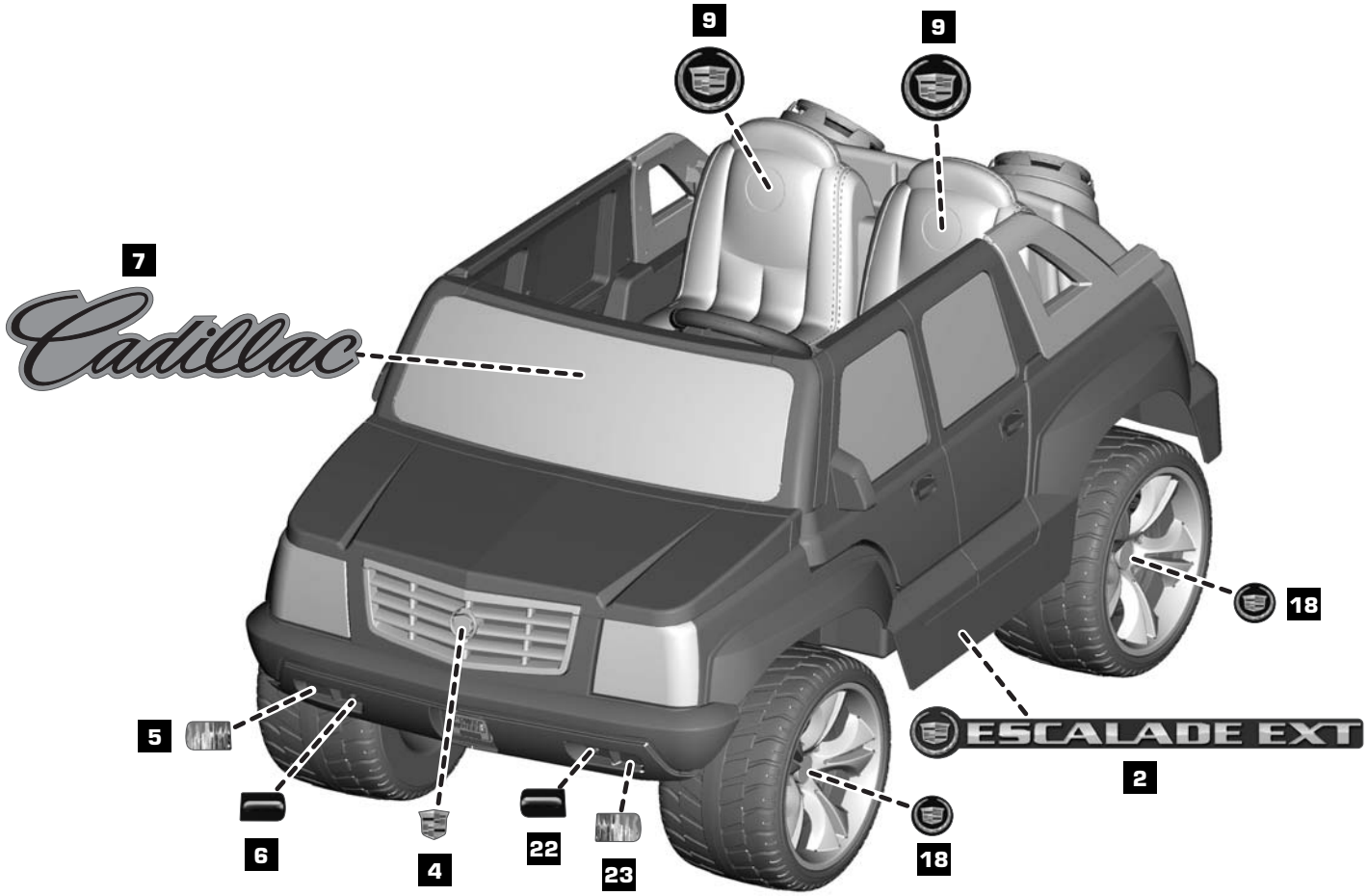

FRONT VIEW

DECORATION

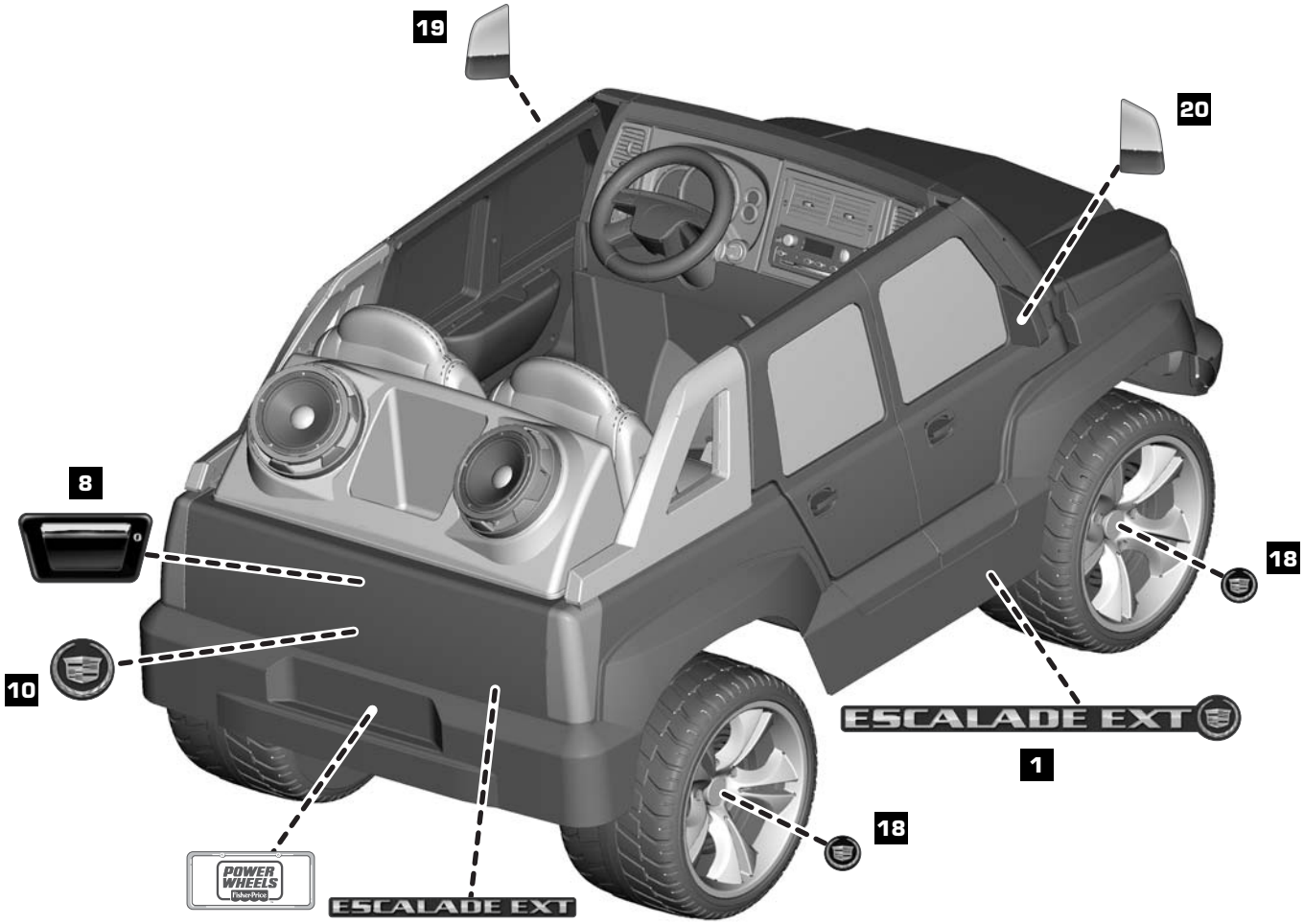

REAR VIEW

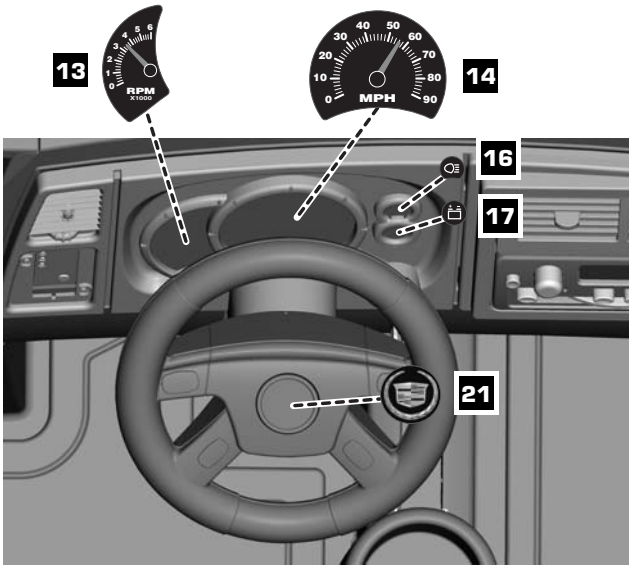

DASH VIEW

IMPORTANT! Use only a Power Wheels® 12 volt lead-acid rechargeable battery. Use of any other battery will damage your vehicle. Make sure that you charge the battery for at least 18 hours using the enclosed Power Wheels® 12 volt charger before operating your vehicle for the first time. Charge the battery for at least 14 hours after each use of the vehicle. Never charge the battery longer than 30 hours. Failure to follow these instructions may damage your battery and will void your warranty.

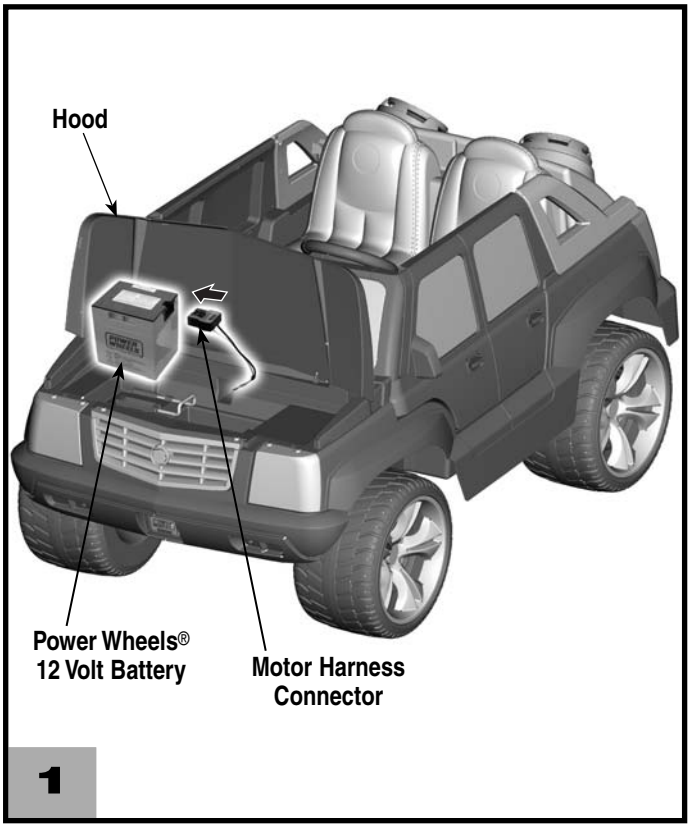

- Lift the hood to access the battery compartment.
- Plug the motor harness connector into the 12 volt battery.

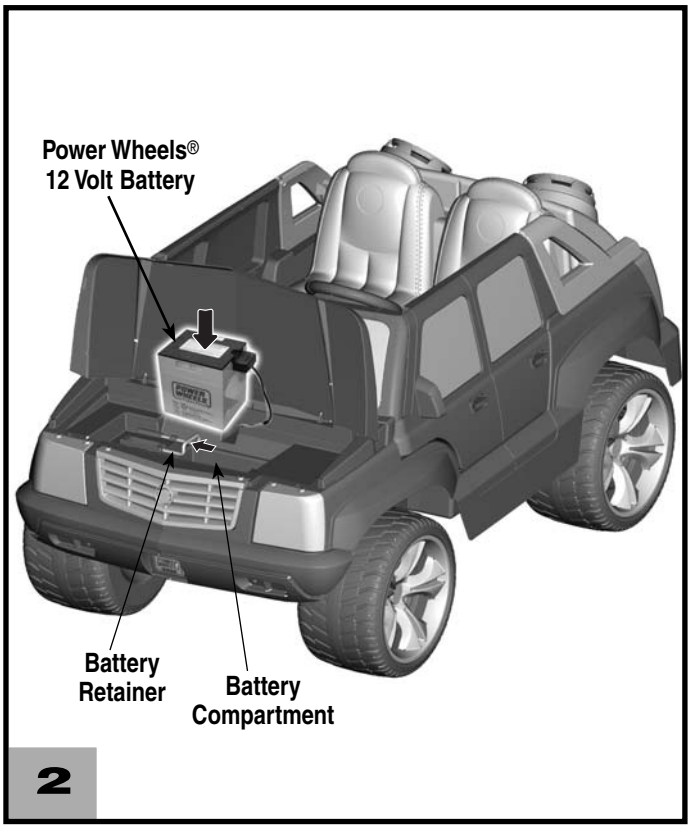

- Push the battery retainer.
- Place the 12 volt battery into the battery compartment. Make sure the battery retainer slides over the battery.
- To close the hood, fit the tabs on the front end of the hood into the slots on each side of the front end of the vehicle.

Care

If a battery leak develops, avoid contact with the leaking acid and place the damaged battery in a plastic bag. See information below for proper disposal.

If acid comes in contact with skin or eyes, flush with cool water for at least 15 minutes and call a physician.

If acid is internally ingested, give water, milk of magnesia or egg whites immediately. Never give emetics or induce vomiting. Call a physician.

- Charge a new battery for at least 18 hours before first use. Never charge the battery longer than 30 hours. Overcharging or undercharging the battery may shorten battery life and decrease vehicle running time.
- After the first charge, recharge the battery for at least 14 hours after each use. Never charge the battery longer than 30 hours. Charge the battery after each use, regardless of how long the vehicle was used.
- The battery must be upright while charging.
- Do not allow the battery to run down completely before charging.
- Charge the battery before storing the vehicle.
- Charge the battery at least once per month, even if the vehicle has not been used.
- Leaving the battery in a discharged condition will ruin it.
- Always remove an exhausted battery from the vehicle. Battery leakage and corrosion can damage the vehicle.
- Do not store the battery on a surface (such as a kitchen counter top) which could be damaged by the acid contained inside the battery. Take precautions to protect the surface on which you store the battery.
- Do not store the battery in temperatures above 75° F or below -10° F.
- Use only a Power Wheels® 12 volt battery. Remember to charge the new battery for at least 18 hours before first use.
- Prevent the battery from moving freely inside the battery compartment. **Always use the battery retainer to secure the battery in the battery compartment.**
- Examine the battery, charger and their connectors for excessive wear or damage each time you charge the battery. If damage is detected, do not use the charger or the battery until you have replaced the worn or damaged part.

Disposal

- Your Power Wheels® battery is a non-spillable, sealed lead-acid battery. It must be recycled or disposed of in an environmentally sound manner.
- Do not dispose of a lead-acid battery in a fire. The battery may explode or leak.
- Do not dispose of a lead-acid battery in your regular, household trash. The incineration, landfilling or mixing of sealed lead-acid batteries with household trash is prohibited by law in most areas.
- Protect the environment by not disposing of this product with household waste (2002/96/EC). Check your local authority for recycling advice and facilities (Europe only).
- Return an exhausted battery to a federal or state approved lead-acid battery recycler, such as a Power Wheels® authorized service center or a local seller of automotive batteries. For the authorized service center location nearest to you, please visit us on-line at **www.powerwheels.com** or call **1-800-348-0751**. Contact your local waste management officials for other information regarding the environmentally sound collection, recycling and disposal of lead-acid batteries. If you live in the State of Florida or the State of Minnesota, it is prohibited by law for anyone to throw away lead-acid batteries in the municipal waste stream.

RIDING HAZARD

⚠ WARNING

- **Prevent Injuries and Deaths**
  - Direct Adult Supervision Required
  - Never Ride at Night.
  - Keep Children Within Safe Riding Areas. These areas must be:
    - away from swimming pools and other bodies of water to prevent drownings
    - generally level to prevent tipovers
    - away from steps, steep inclines, cars, roads and alleys.
  - Riding Rules
    Make sure children know and follow these rules for safe driving and riding.
    - Always sit on the seat.
    - Always wear shoes.
    - Only 2 (two) riders at a time.

Teach Safety Rules to Children

While children can quickly develop the skill necessary to drive this vehicle, it is important to remember that their judgment skills are still very immature. Unsupervised driving by children can lead to serious injury. Before children use this vehicle, an adult should carefully evaluate the driving area as well as the children's skill level and ability to drive this vehicle safely. Children are not always able to recognize or anticipate hazards, even when they have been taught about them. There is no acceptable substitute for direct adult supervision.

Teach appropriate safety rules to your child before allowing operation of this vehicle. These rules should also be reviewed with neighborhood children or other playmates who want to drive this vehicle.

Riding Rules

Make sure children know and follow these rules for safe driving:

1. Always sit on the seat.
2. Always wear shoes.
3. Only 2 (two) riders at a time. A child who is not sitting on the seat or who is standing on the vehicle could fall off, cause a tip-over or block the driver's view. A child could be seriously injured.
4. Do not allow any child to drive the vehicle in the street or near moving (motorized) vehicles.
5. Do not allow any child to drive near bodies of water (such as pools or creeks), obstructions (such as furniture, low tree limbs or play equipment), or drop-offs (such as stairs or decks).
6. Do not allow any child to drive the vehicle in the dark. A child could encounter unexpected obstacles and have an accident. Operate the vehicle only in the daytime or a well-lit area.
7. Do not allow your child to drive on sloped or inclined surfaces. Restrict your child's driving to generally level ground ONLY!
8. Do not allow your child to drive down or across a steep slope.
   - The vehicle may gain unsafe speed, even if the pedal is released to stop.
   - The vehicle may tilt and tip over.
   - The wheels could lose traction, causing the vehicle to slip.
9. Do not allow your child to drive up steep inclines. The motor may stop and the vehicle could roll backwards at an unsafe speed.
10. Never put anything near any moving parts. Rotating parts such as motors, gear boxes and wheels can snag fingers, hair, etc., causing serious injury. Do not allow operation of the vehicle when it is on its side or in an upside-down position.
11. Do not operate the vehicle near flammable vapors (gasoline, paint thinner, acetone, liquid wax, etc.). The vehicle's electrical switches, like most electrical switches, emit an internal spark when first turned on or turned off. The presence of flammable liquids or vapors could cause an explosion or a fire. Keep all flammable products in tightly sealed containers and away from the vehicle.
12. Do not allow a child to operate the vehicle without direct adult supervision. To prevent unsupervised use of the vehicle, disconnect the motor harness from the battery when the vehicle is not in use.

IMPORTANT! Use this vehicle **ONLY** outdoors. Most interior flooring can be damaged by riding this vehicle indoors. Fisher-Price® will not be responsible for damage to the floor if the vehicle is used indoors.

Beginner Use - Low Speed Drive

As assembled, your vehicle is ready to roll in low speed (2½ mph, maximum). It has been pre-set so it will only operate in low speed. After your child has mastered the basic skills of driving and understands the rules for safe driving, it's time to remove the high speed lock-out screw to allow the vehicle to operate in low or high speed. **See the instructions on this page to remove the high speed lock-out screw.**

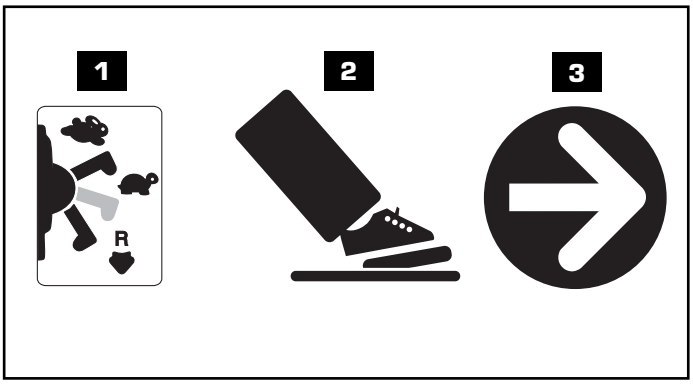

- Make sure the shifter is in the low speed position 1 .
- Press down on the foot pedal 2. The vehicle goes forward at a maximum of 2½ mph 3. Help your child practice steering to learn how far and how quickly to turn the steering wheel when driving forward in low speed.

To Back Up

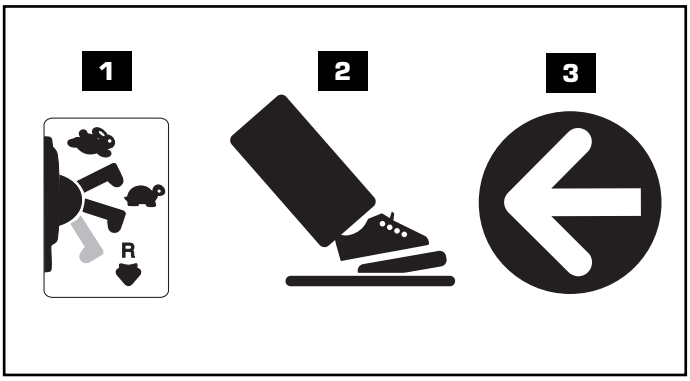

IMPORTANT! To avoid damaging the motors and gears, stop the vehicle before shifting from forward to reverse.

- Once your child is completely comfortable with operating the vehicle in the forward mode, introduce reverse .
- Make sure the shifter is in the reverse position 1.
- Press down on the foot pedal 2.The vehicle will go in reverse at a maximum of 2½ mph 3. The vehicle is designed to operate in low speed only in reverse. Help your child practice steering to learn how far and how quickly to turn the steering wheel when driving in reverse.

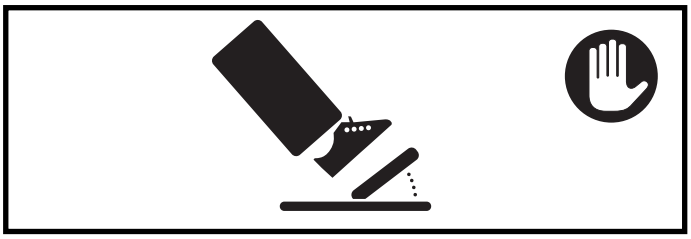

- Your vehicle has a patented, electronic braking system that automatically stops the vehicle when your child's foot lifts from the pedal. Make sure your child is comfortable with steering the vehicle and automatically knows how to stop.

Advanced Use - High Speed Drive

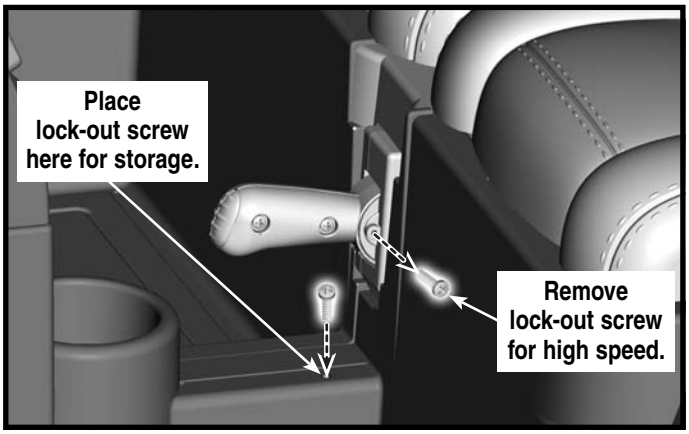

- Before you disconnect the high speed lock-out, make sure your child knows how to steer, how to start and stop the vehicle and knows the rules for safe driving. When the high speed lock-out is disconnected, the vehicle can be driven forward in low speed (2½ mph, maximum) or high speed (5 mph, maximum).
- Make sure the shifter is in the reverse position.
- Loosen and remove the screw in the shifter box.
- Place the lock-out screw into the hole in the vehicle for future use. It can be re-inserted into the shifter box to lock-out high speed.

To Drive

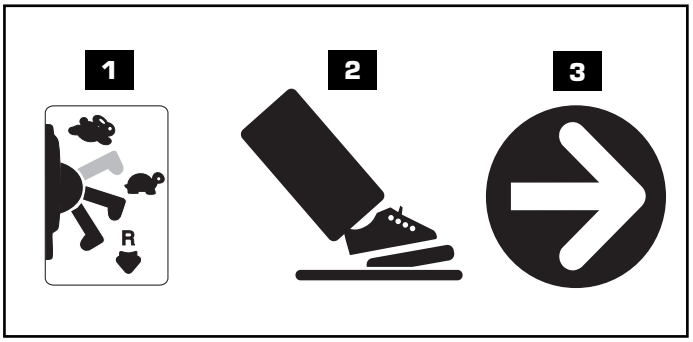

- Make sure the shifter is in the high speed position 1.
- Press down on the foot pedal 2. The vehicle goes forward at a maximum of 5 mph 3. Help your child practice steering to learn how far and how quickly to turn the steering wheel when driving forward in high speed.

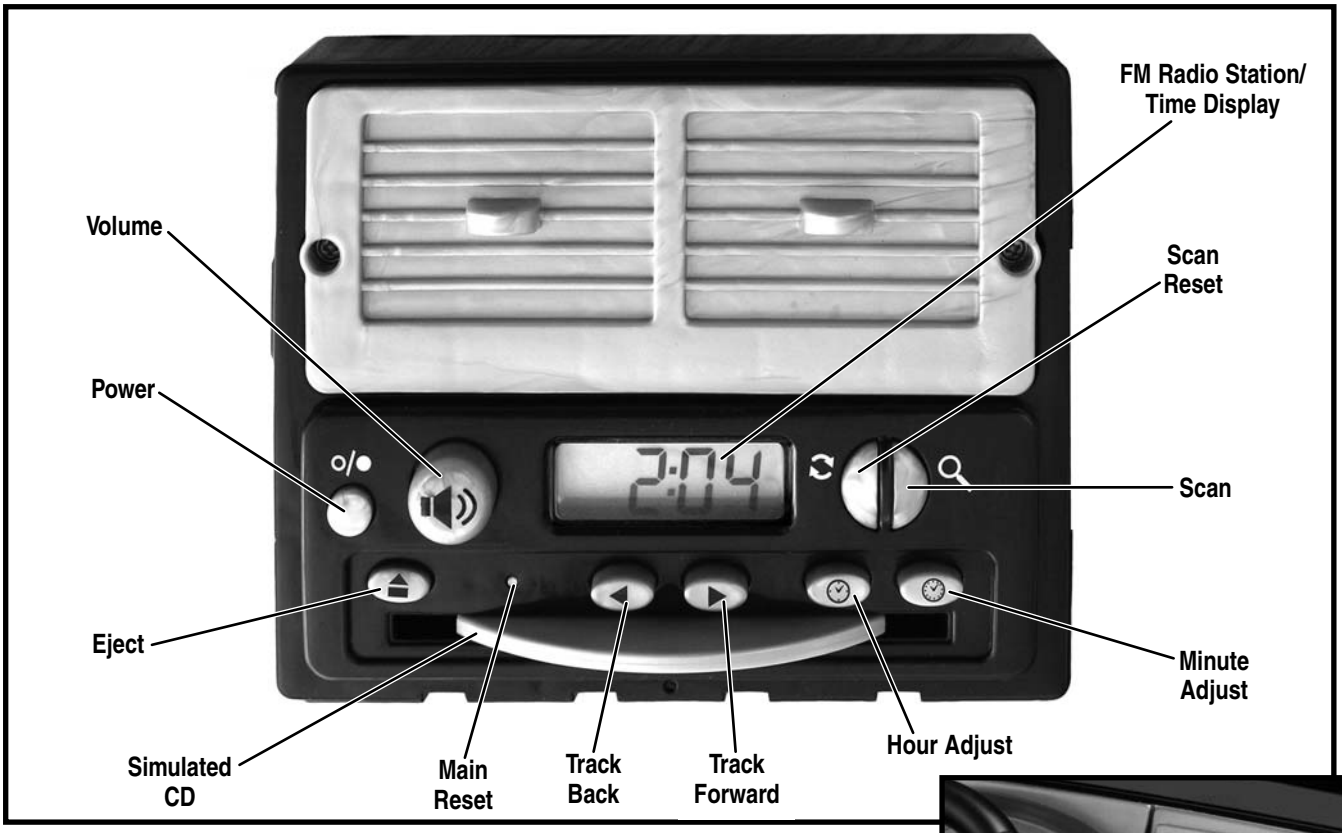

Power/Volume

- Press the power button ○/● to turn on or off.
- Turn the volume dial to adjust to a comfortable listening level.

Hint: *The FM Radio will turn off automatically after about one hour of non-use.*
The Simulated CD Player will turn off automatically after about 10 minutes of non-use.

FM Radio

- Press the scan button to find a station.
- Press the scan button again to go to the next station.
- To reset the radio to the first station, press the scan reset button .
- FM Radio reception varies from area to area. If the tuned station is lost due to poor reception, the radio automatically scans to the next station with good reception.

Hint: *Each time power is turned off and back on, the FM Radio will reset to the first station.*

Simulated CD Player

- Press the simulated CD to “pop” it in.
- Press the track forward ▶ or track back ◀ buttons to move ahead or backward through the songs.
- Press the eject button to switch back to FM Radio.

Setting the Digital Clock

- Press the eject button to "eject" the simulated CD.
- Press the power button ○/● off.
- Press the hour adjust button to set the hour.
- Press the minute adjust button to set the minute.

Hint: *Your child may accidentally hit the hour or minute adjust buttons and change the time on the clock. Simply use these buttons to reset to the correct time!*

Microphone

- Press the button on the side of microphone and talk. Listen to your voice.
- Press any button on the top of the microphone for fun phrases!

IMPORTANT! If the FM Radio, Simulated CD Player or Digital Clock function erratically, press the main reset button with the point of a pen (or similar object).

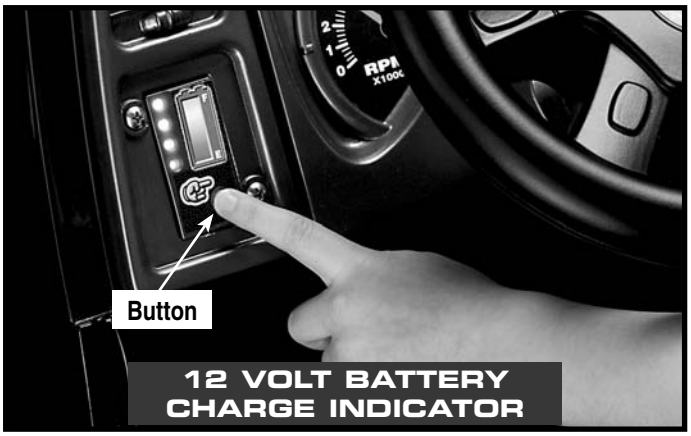

- Press the 12 volt battery charge indicator button to check the power level of your battery:
  - All four lights means the 12 volt battery is 100% (fully) charged.
  - Three lights means the 12 volt battery is 75% (mostly) charged.
  - Two lights means the 12 volt battery is 50% charged. We recommend recharging your battery for 14 hours.
  - One or no lights means the 12 volt battery needs charging. Fully charge your battery for 14 hours.

Hint: *For the most accurate reading, do not press the battery charge indicator while the vehicle is moving.*

- Check all screws, cap nuts and their protective coverings regularly and tighten as required. Check plastic parts on a regular basis for cracks or broken pieces.
- During snowy or rainy weather, the vehicle should be stored inside or under a protective cover. Remember to charge the battery at least once per month while your vehicle is not in regular use.
- Avoid operating the vehicle in wet or snowy conditions, and do not spray the vehicle with a hose. Do not wash the vehicle with soap and water. Water or moisture in the motors or electrical switches can cause them to corrode, and could cause switch or motor failure.
- Avoid operating the vehicle on sand, loose dirt or gravel. Sand, loose dirt or gravel in the motors or electrical switches can cause them to jam, and could cause switch or motor failure.
- The vehicle can be wiped down with a soft, dry cloth. For a shiny finish, you can wipe plastic parts with a non-wax furniture polish applied to a soft-cloth. Do not use automotive wax. Do not use soap and water or spray the vehicle with a hose.
- To ensure that your vehicle stays in good operating order, we recommend that you periodically have your vehicle checked by a Power Wheels® authorized service center. For the location of the authorized service center nearest you, please visit us on-line at **www.powerwheels.com** or call **1-800-348-0751**.

FCC NOTE (United States Only)

Note: This equipment has been tested and found to comply with the limits for a Class B digital device, pursuant to Part 15 of the FCC Rules. These limits are designed to provide reasonable protection against harmful interference in a residential installation. This equipment generates, uses and can radiate radio frequency energy and, if not installed and used in accordance with the instructions, may cause harmful interference to radio communications. However, there is no guarantee that interference will not occur in a particular installation. If this equipment does cause harmful interference to radio or television reception, which can be determined by turning the equipment off and on, the user is encouraged to try to correct the interference by one or more of the following measures:

- Reorient or relocate the receiving antenna.
- Increase the separation between the equipment and receiver.
- Consult the dealer or an experienced radio/TV technician for help.

Note: Changes or modifications not expressly approved by the manufacturer responsible for compliance could void the user's authority to operate the equipment.

LIMITED WARRANTY

Bumper-to-Bumper* Limited Warranty

***One year limited warranty from the date of purchase on the Power Wheels® vehicle.**

Six month limited warranty on the 12 volt battery.

For the original purchaser, this one year limited warranty covers the Power Wheels® ride-on vehicle (purchased from Power Wheels®) against defects in materials and workmanship. The six month limited warranty applies only to the 12 volt battery included by Power Wheels® with the original purchase of the vehicle. This warranty covers normal use and does not cover the Power Wheels® vehicle or battery if damaged by unreasonable use, neglect, accident, abuse, misuse, improper service or other causes not arising out of defects in materials or workmanship. Evidence of any attempt at consumer repair will void this warranty. THIS WARRANTY DOES NOT COVER, AND IS INTENDED TO EXCLUDE, ANY LIABILITY ON THE PART OF POWER WHEELS®, WHETHER UNDER THIS WARRANTY OR IMPLIED BY LAW FOR ANY INDIRECT OR CONSEQUENTIAL DAMAGES FOR BREACH OF WARRANTY. SOME STATES DO NOT ALLOW THE EXCLUSION OR LIMITATION SO THIS LIMITATION MAY NOT APPLY TO YOU.

Should you need service or assistance with your vehicle during the warranty period, do not return the vehicle to the store. Power Wheels® has provided a nationwide network of authorized service centers. If there is not an authorized service center in your area, please visit us on-line at **www.powerwheels.com** or call Consumer Relations for information, **1-800-348-0751**.

This warranty gives you specific legal rights, and you may also have other rights which may vary from state to state.

PLEASE SAVE YOUR ORIGINAL SALES RECEIPT.

PROBLEMS AND SOLUTIONS GUIDE

IMPORTANT! If you experience a problem with your vehicle, first check the Problems and Solutions Guide below. If you still experience a problem, please contact Power Wheels® Consumer Relations, toll-free at **1-800-348-0751** between 9 AM and 7 PM (EST) Monday through Friday and 11 AM and 5 PM (EST) Saturday. Or, contact your local Power Wheels® authorized service center. For the location nearest you, please visit us on-line at **www.powerwheels.com**, or call **1-800-348-0751**.

PROBLEM	POSSIBLE CAUSE	SOLUTION
Vehicle does not run	Undercharged battery	Charge the battery. A new battery should have been charged for at least 18 hours before using the vehicle for the first time. After first-time use, recharge the battery for at least 14 hours after each use. Never charge the battery longer than 30 hours.
		Check all connectors. Make sure the charger is tightly plugged into the battery, and that the charger is plugged into the wall.
		Make sure power flow to the wall outlet is “ON”.
	Charger is not working	There is no sure way to tell if your charger is working unless you have a volt meter. If you suspect there is a problem with your charger, contact your local Power Wheels® authorized service center. They can test your charger for you.
	Tripped thermal fuse	The built-in thermal fuse may "trip" and shut down operation of the vehicle if the vehicle is overloaded or the driving conditions too severe. Once a fuse has "tripped", remove your foot from the pedal and wait approximately 25 seconds before operating the vehicle again. To avoid repeated automatic shutdowns, do not overload the vehicle by exceeding the 130 lbs maximum weight capacity or by towing anything behind the vehicle. Do not drive up hills or run into fixed objects, which can cause the wheels to stop spinning while power is still being supplied to the motors. If a thermal fuse continually trips, contact your local Power Wheels® authorized service center.
	Loose wires or loose connectors	Check all wires and connectors. Make sure the motor harness connector is tightly plugged into the battery and that there are no loose wires around the motors.
	Dead battery	If your battery is old or if you have not followed Battery Care instructions, your battery may be dead. If you are unsure whether or not the battery are dead, you can have it tested at your local Power Wheels® authorized service center.
	Electrical switch damage	The electrical switches can become corroded due to exposure to water or moisture, or can jam due to loose dirt, sand or gravel. Contact your local Power Wheels® authorized service center for diagnosis and repair.
	Motor damage	Contact your local Power Wheels® authorized service center for diagnosis and repair.

PROBLEM	POSSIBLE CAUSE	SOLUTION
Vehicle was running but suddenly stopped	Loose wires or loose connectors	Check all wires and connectors. Make sure the motor harness connector is tightly plugged into the battery, and that there are no loose wires around the motors.
	Tripped thermal fuse	The built-in thermal fuse may "trip" and shut down operation of the vehicle if the vehicle is overloaded or the driving conditions too severe. Once a fuse has "tripped", remove your foot from the pedal and wait approximately 25 seconds before operating the vehicle again. To avoid repeated automatic shutdowns, do not overload the vehicle by exceeding the 130 lbs maximum weight capacity or by towing anything behind the vehicle. Do not drive up hills or run into fixed objects, which can cause the wheels to stop spinning while power is still being supplied to the motors. If a thermal fuse continually trips, contact your local Power Wheels® authorized service center.
Short run time (Less than 1 - 3 hours per charge)	Undercharged battery	Charge the battery. A new battery should have been charged for at least 18 hours before using the vehicle for the first time. After first-time use, recharge the battery for at least 14 hours after each use. Never charge the battery longer than 30 hours.
		Check all wires and connectors. Make sure the motor harness connector is tightly plugged into the battery, and that the charger is plugged into the wall.
		Make sure power flow to the wall outlet is “ON”.
	Overcharged battery	Do not charge the battery longer than 30 hours. If you suspect that your battery is damaged as a result of overcharging, contact your local Power Wheels® authorized service center. They can test the battery for you.
	Battery is old and will not accept full charge	Even with proper care, a rechargeable battery does not last forever. Average battery life is 1 to 3 years depending on vehicle use and use conditions. Replace only with a Power Wheels® 12 Volt Lead-Acid Rechargeable Battery. **Do not substitute parts.**
	Tripped thermal fuse	The built-in thermal fuse may "trip" and shut down operation of the vehicle if the vehicle is overloaded or the driving conditions too severe. Once a fuse has "tripped", remove your foot from the pedal and wait approximately 25 seconds before operating the vehicle again. To avoid repeated automatic shutdowns, do not overload the vehicle by exceeding the 130 lbs maximum weight capacity or by towing anything behind the vehicle. Do not drive up hills or run into fixed objects, which can cause the wheels to stop spinning while power is still being supplied to the motors. If a thermal fuse continually trips, contact your local Power Wheels® authorized service center.

PROBLEM	POSSIBLE CAUSE	SOLUTION
Vehicle runs in low speed, but does not run in high speed Please Note: The vehicle is designed to operate in low speed only in reverse .	High speed lock-out not disconnected	The vehicle was pre-set to run only in low speed. To allow the vehicle to run in low and high speed, you must disconnect the High Speed Lock-Out. Follow the instructions on page 26 to remove the High Speed Lock-Out screw.
When the foot pedal is pressed one rear wheel spins	Operation of vehicle in low speed	It is possible that only one rear wheel may spin when both only rear wheels are raised off the ground and the vehicle is in low speed. This does not necessarily indicate a problem. Check for proper operation of the drive system by raising the rear wheels off the ground and pressing the foot pedal. If only one rear wheel spins, carefully press your hand on the spinning wheel to slow it down. The other rear wheel should begin to spin. If the other rear wheel does not begin to spin, there may be a problem with the vehicle. Contact your local Power Wheels® authorized service center for diagnosis and repair.
Vehicle runs sluggishly	Undercharged battery	Charge the battery. A new battery should have been charged for at least 18 hours before using the vehicle for the first time. After first-time use, recharge the battery for at least 14 hours after each use. Never charge the battery longer than 30 hours.
		Check all connectors. Make sure the charger connector is tightly plugged into the battery, and that the charger is plugged into the wall.
		Make sure power flow to the wall outlet is “ON”.
	Battery needs charging	Be sure to charge the battery after each use.
	Battery is old and will not accept full charge	Even with proper care, a rechargeable battery does not last forever. Average battery life is 1 to 3 years depending on vehicle use and use conditions. Replace only with a Power Wheels® 12 Volt Lead-Acid Rechargeable Battery. **Do not substitute parts.**
	Vehicle is overloaded	Make sure you do not overload the vehicle by allowing more than two riders at one time, exceeding the 130 lbs. maximum weight capacity, or by towing objects behind the vehicle. If the vehicle is overloaded, the built-in thermal fuse in the battery may "trip", and automatically shut down operation for approximately 25 seconds. Adjust the driving conditions to prevent repeated automatic shutdowns.
	Driving conditions are too stressful	Use only on generally level ground.

PROBLEM	POSSIBLE CAUSE	SOLUTION
Sometimes the vehicle doesn't run, but other times it does	Loose wire or connector	Check all wires around the motors and all connectors to make sure they are tight.
	Motor or electrical switch damage	Contact your local Power Wheels® authorized service center for diagnosis and repair.
When the foot pedal is pressed, the vehicle won't run without a push	Loose wire or connector	Check all wires around the motors and all connectors to make sure they are tight.
	"Dead Spot" on motor	Contact your local Power Wheels® authorized service center for diagnosis and repair.
Battery's thermal fuse constantly "trips", but the vehicle is not overloaded nor the driving conditions too severe	Damaged battery	Contact your local Power Wheels® authorized service center for diagnosis and repair.
	Child is switching between FORWARD and REVERSE without stopping	Teach your child to stop the vehicle before switching direction.
Loud clacking or grinding noise from a motor-gearbox	Broken gears	Contact your local Power Wheels® authorized service center for diagnosis and repair.
Charger gets warm during use	It is normal for some chargers to get warm during use and is not reason for concern. Some chargers do not get warm during use.	No action required.
		If your charger does not get warm during use, it does not mean that it is not working properly.
Battery makes a sizzling or gurgling noise when charging	It is normal for some batteries to make noise and swell slightly while charging and is not reason for concern.	No action required.
		If your battery does not make noise or swell slightly during charging, it does not mean that it is not accepting the charge.

PROBLEMS AND SOLUTIONS GUIDE

PROBLEM	POSSIBLE CAUSE	SOLUTION
FM Radio does not function	Simulated CD is inserted	Press the eject button ⏏ to switch back to FM radio use.
	Power is off	Power automatically turns off after about one hour of non-use. Press the power button ○/● to turn it back on.
	Batteries are weak or dead	Replace all four batteries with four, new "C" (LR14) **alkaline** batteries.
FM Radio station changes automatically	Poor reception	You may find better reception of a particular station in a different location.
	Power was turned off and the radio reset back to the first station	Use the scan button to reset to your favorite station.
Simulated CD Player does not function	Simulated CD is not inserted	Press the simulated CD to "pop" it in.
	Power is off	Power automatically turns off after about 10 minutes of non-use. Press the power button ○/● to turn it back on.
	Batteries are weak or dead	Replace all four batteries with four, new "C" (LR14) **alkaline** batteries.
Digital Clock display is faint or not visible	Batteries are weak or dead	Replace all four batteries with four, new "C" (LR14) **alkaline** batteries.
	FM Radio is in use	Digital Clock displays only when FM Radio and simulated CD Player power is off or simulated CD Player is in use.
I still hear sounds, but the display is blank on the FM Radio/ Simulated CD Player/Digital Clock	Batteries are weak or dead	Replace all four batteries with four, new "C" (LR14) **alkaline** batteries.
FM Radio/Simulated CD Player/ Digital Clock function erratically	Electronic lock-up	Press the main reset button on the front of the unit with the point of the pen (or similar object).
Microphone does not function	Batteries are weak or dead	Replace all four batteries with four, new "C" (LR14) **alkaline** batteries.

If, after reviewing the Problems and Solutions Guide, the vehicle still fails to operate, please contact your nearest authorized service center.

Before first-time use, you must charge the battery 18 hours!

Charge the battery immediately after each use.

Charge the battery once a month, even if the vehicle is not used or stored.

Do not return your vehicle to the store!

We're a toll-free phone call away, and we can help.
If you are missing parts or need assistance, please call:

1-800-348-0751

Or contact your local **independently owned and operated** Power Wheels® Authorized Service Center.

For the location nearest you, visit us on-line at **www.powerwheels.com**.

Fisher-Price, Inc., a subsidiary of Mattel, Inc., East Aurora, New York 14052 U.S.A.
©2006 Mattel, Inc. All Rights Reserved.

PRINTED IN MEXICO

H0440pr-0923