This Owner's Manual is provided and hosted by Appliance Factory Parts.

Appliance Factory Parts
Experts in BBQ, Humidifier, & Appliance Parts
1-800-955-7075

FISHER PRICE H0440 Owner's Manual

Shop genuine replacement parts for FISHER PRICE H0440

Find Your FISHER PRICE Ride On Parts - Select From 999 Models

-------- Manual continues below --------

IMPORTANT!

Please follow these instructions to assemble the steering wheel to the steering column.

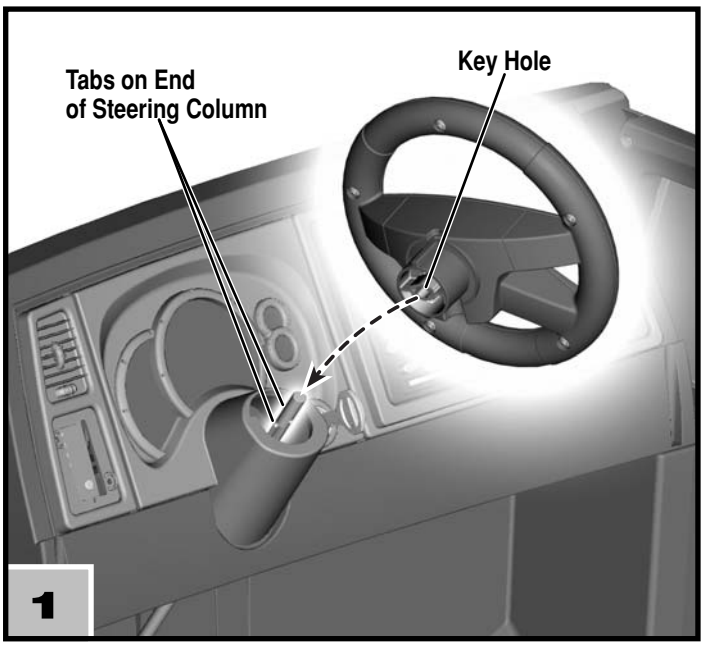

• Fit the keyhole inside the steering wheel to the tabs on the end of the steering column.

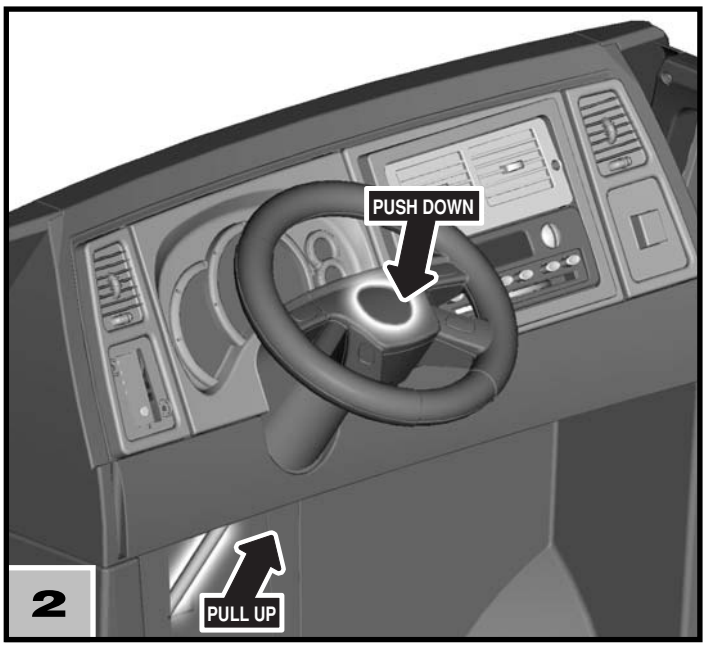

• While pulling up on the steering column, push down on the center of the steering wheel.

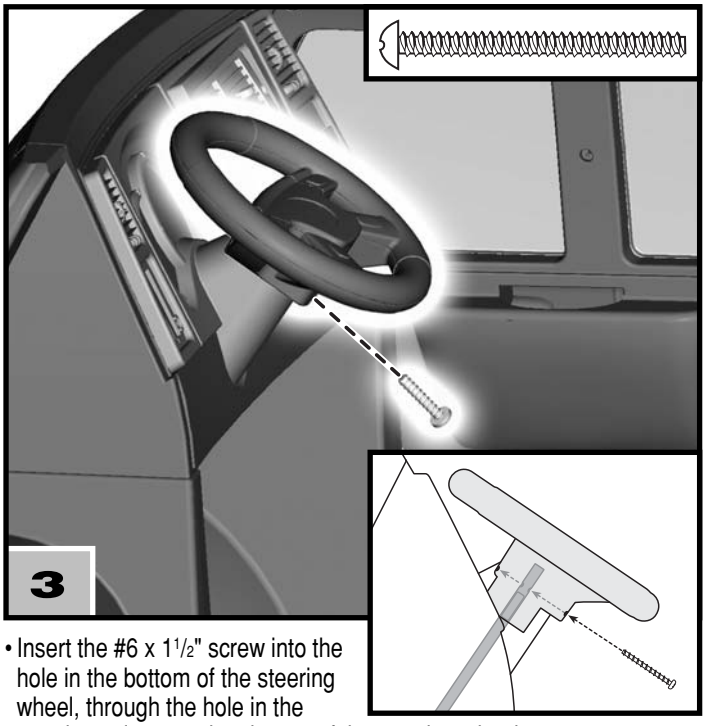

• Insert the #6 x 1½" screw into the hole in the bottom of the steering wheel, through the hole in the steering column and to the top of the steering wheel.

Hint: *You may need to push down on the center of the steering wheel to be sure the screw goes through the steering column.*

• Tighten the screw.

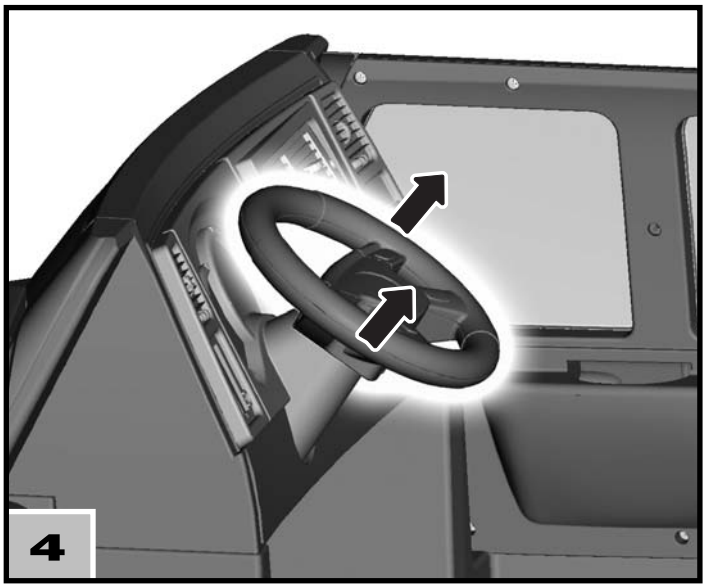

• Pull up on the steering wheel to be sure it is assembled correctly. **If you can remove the steering wheel, you have not inserted the screw through both the bottom of the steering wheel and the steering column.** Please review these instructions and re-assemble the steering wheel.

Fisher-Price, Inc., a subsidiary of Mattel, Inc., East Aurora, NY 14052 U.S.A.
©2006 Mattel, Inc. All Rights Reserved. ® and ™ designate U.S. trademarks of Mattel, Inc.

PRINTED IN MEXICO

H0440pr-0922