This Owner's Manual is provided and hosted by Appliance Factory Parts.

Appliance Factory Parts
Experts in BBQ, Humidifier, & Appliance Parts
1-800-955-7075

HOOVER S3083 Owner's Manual

Shop genuine replacement parts for HOOVER S3083

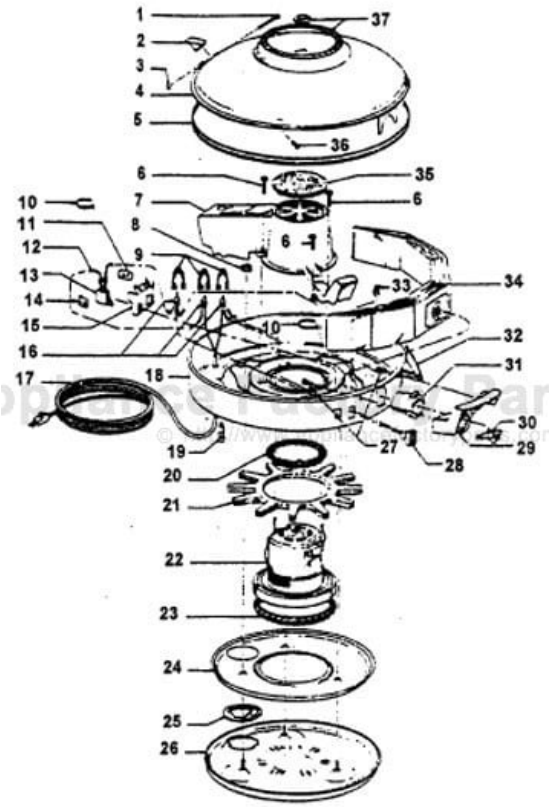

Find Your HOOVER Vacuum Cleaner Parts - Select From 1456 Models

-------- Manual continues below part list --------

Available Replacement Parts for HOOVER S3083

H-43267002	AGITATOR BEARING ASM
H-4010009H	PAPER BAG, 3 PK
H-43414073	Floor brush.
H-43414064	DUSTING BRUSH (ONE PEICE)

Models S3057, S3081, S3083, S3083-030, S3093, S3147

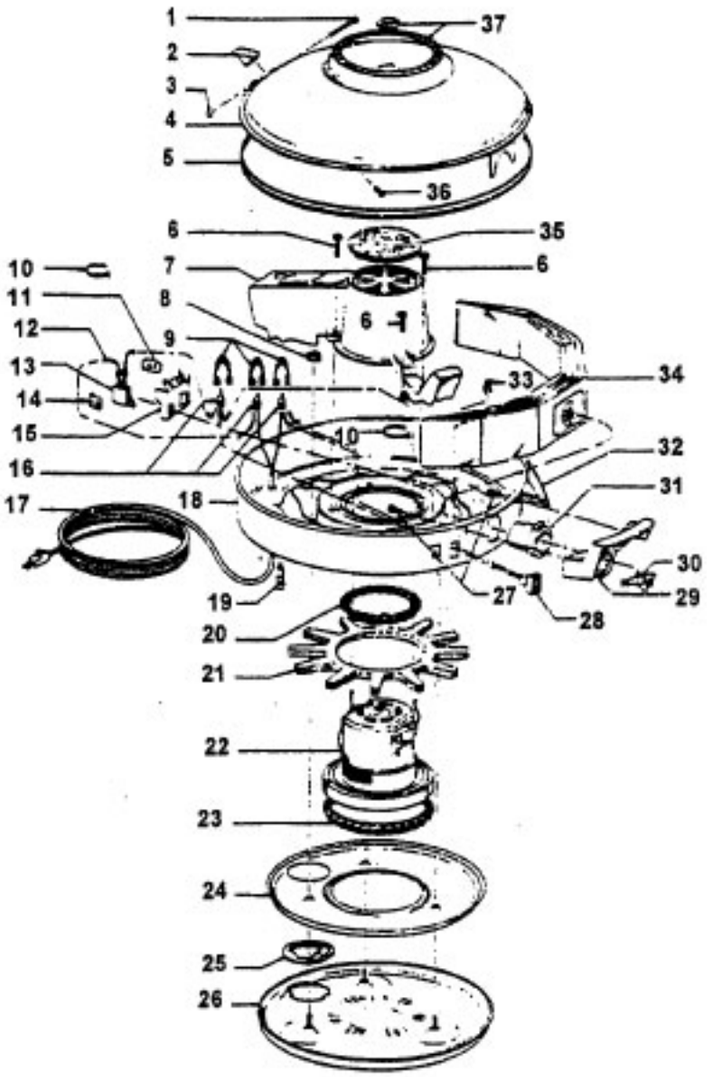

Ref. No.	Part No.	Description
1	47938	Hinge Pin
2	170362JM	Cord Clip
3	48123AV	Lock Ring
4	42211161	Upper Shell
	42211164	Upper Shell - S3081, S3093
5	170361JM	Furniture Guard
6	17001FW	Screw (3)
7	170377JM	Motor Cover
8	21652003	Nut - Hex (3)
9	161881	Terminal Lock (3)
10	27479307	Wire Tie (2)
11	13312	Switch Retaining Clamp (Metal)
	36131003	Switch Cover - R.H. (Plastic)
12	170333	Lead Wire - White
13	12971	Switch
14	13313	Switch Retaining Clamp (Metal)
	36131002	Switch Cover - L.H. (Plastic)
15	34353001	Switch Insulation
16	48969	Wire Nut (3)
17	46363195	Cord
18	42213115	Intermediate Shell
19	27482120	Strain Relief Bushing
20	169293	Motor Mount - Upper
21	31194005	Muffler
22	43177008	Motor - (P-39)
23	169294	Motor Mount - Lower
24	37215097	Intake Pan
25	170382JM	Blower Adapter (All except S3093 & S3147)
26	41421122	Bottom Pan - S3057, S3081
	41421189	Bottom Pan - S3093, S3147
27	166735EF	Screw (2)
28	46326076	Connector
29	39457006	Handle
30	36151012	Latch
31	170352AG	Bag Collar Connector
32	16439JX	Shell Cover Latch
	16439EW	Shell Cover Latch
33	34341006	Retaining Clip (Connector)
34	4010009H	Throw Away Bag (3 Pk.)
35	170332BZ	Secondary Filter
36	13533	Screw (Cord Clip)
37	52125002	Medallion - S3057
	51661008	Medallion - S3081, S3093
	51661009	Medallion - S3147
	52125006	Medallion & Trim

ITEMS NOT ILLUSTRATED

170351AW	Hinge Leaf Upper (Upper Shell)
23737202	Caster Wheel Assm. - S3083

PACKAGING MATERIAL

58177087	Carton
58259001	Top Support - S3083, S3083-030, S3093, S3147
58271001	Bottom Support - S3057, S3081
58132009	Nozzle Carton
58332001	Nozzle Support
56513015	Owner Manual - S3057
56513058	Owner Manual - S3081, S3083, S3083-030
56513071	Owner Manual - S3093
56513092	Owner Manual - S3147

S3073, S3073-030, S3079, S3079-030, S3079-035, S3081, S3083, S3083-030, S3093, S3121, S3123, S3125, S3125-030, S3127, S3131, S3131-030, S3133, S3135, S3147, S3149, S3159 S3161, S3165, S3167, S3169, S3215

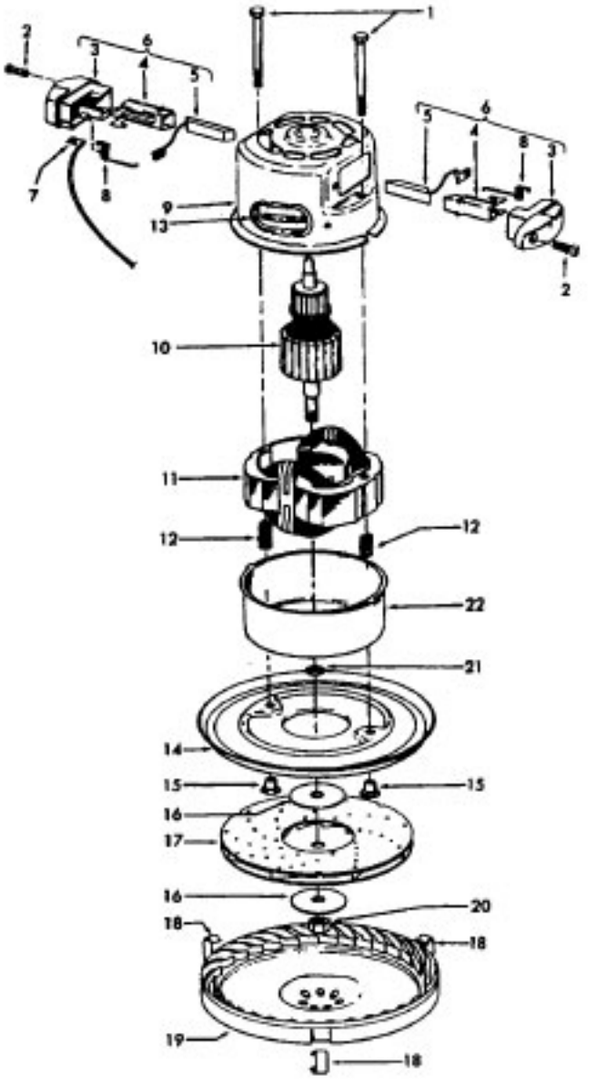

Ref. No.	Part No.	Description
1	33421004	Field Lamination Bolt
2	21429406	Screw
3	167696AG	Brush Housing - Only
4	N/A	Brush Holder - Use Brush Carrier Assem. 47318008 It. 6.
5	167681	Carbon Brush & Terminal
6	47318008	Brush Housing - Comp.
7	27666551	Terminal
8	38353004	Spring
9	169707	Motor Housing - Upper
10	168479	Armature
11	168470	Field
12	167721FW	Spring
13	169702BZ	Bushing
14	169713FW	Motor Mounting Plate
15	167695EF	Nut
16	21312774	Washer
17	43566006	Fan
18	34785004	Spring Clip
19	169714AG	Diffuser
20	33426001	Nut
21	31148002	Spacer
22	41823002	Motor Housing - Lower

Powermatic Nozzle

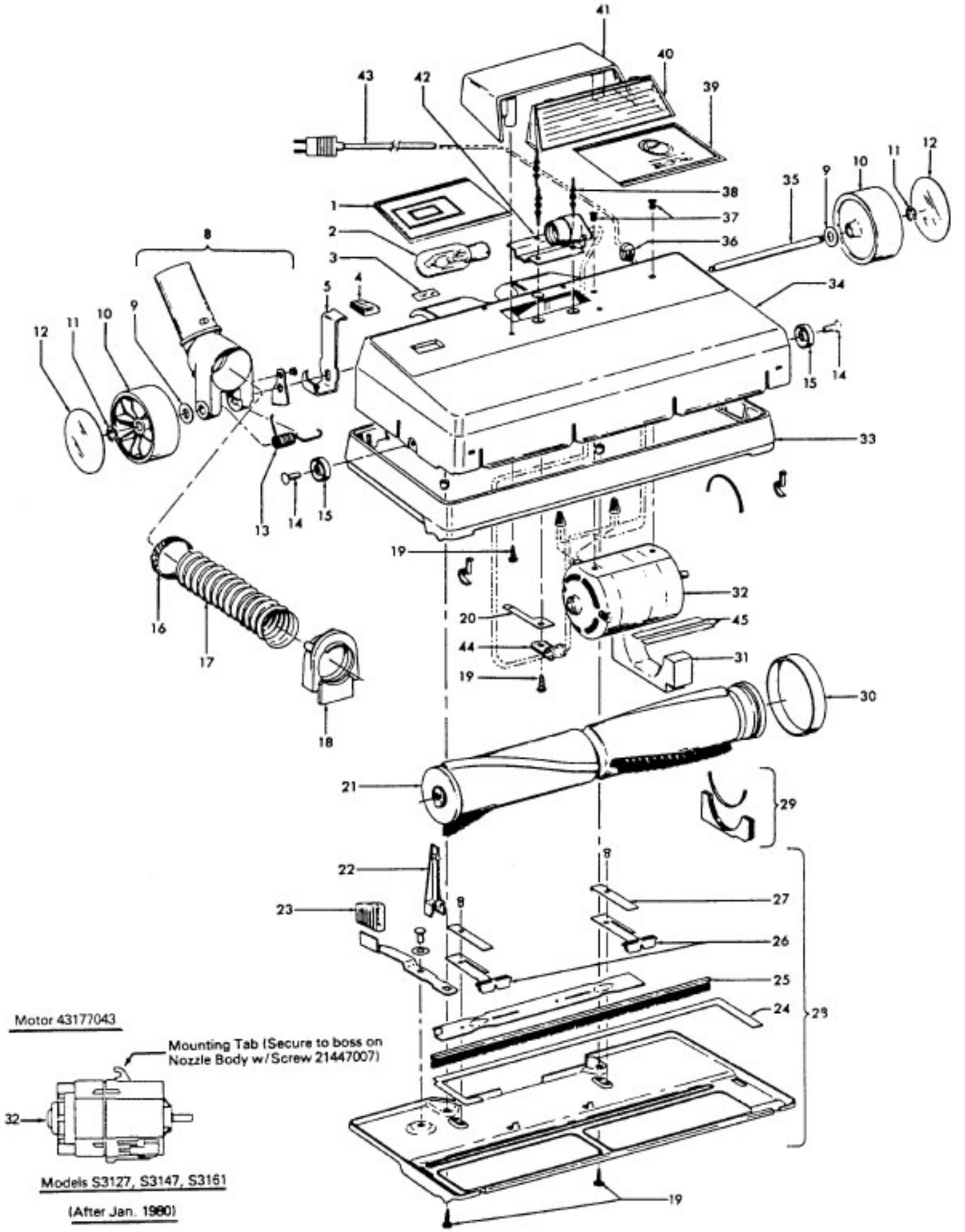

Powermatic Nozzle

Models S3057, S3059, S3059-030, S3061, S3061-030, S3077 S3079, S3079-030, S3079-035, S3081, S3083, S3083-030, S3093, S3127, S3147, S3149, S3161

Ref. No.	Part No.	Description
1	51639014	Nameplate - S3061, S3077
2	27317307	Lamp - S3061, S3061-030, S3077
3	39382013	Indicator Lens
4	38426072	Foot Pad
	38426071	Foot Pad - S3077, S3079, S3079-030, S3079-035, S3081, S3161
5	34664007	Handle Release Lever
8	43468013	Nozzle Position Bracket Assm. (Incl. Screw & Handle Position Bracket)
9	31155005	Washer - Plain (2)
10	38522001	Wheel (2)
11	13730	Lock Ring (2)
12	169242	Wheel Cover (2)
13	38355005	Torsion Spring
14	21256025	Rivet (2)
15	32761001	Wheel (2)
16	166651	Felt Seal
17	43431196	Hose
18	38638013	Hose Adapter
19	21429404	Screw (3)
20	35412003	Spring
21	48416004	Agitator
22	51151031	Indicator
23	38426080	Foot Pad
24	34123001	Seal
25	48443001	Brush
26	36952008	Brush Support (2)
27	34654003	Spring (2)
28	42246006	Bottom Plate Assm.
	42246007	Bottom Plate Assm. - S3081, S3093
	42246050	Bottom Plate Assm. - S3079-035
	42246003	Bottom Plate Assm. - S3057, S3059, S3061, S3127, S3147, S3149, S3161
29	43548001	Agitator Seal Assm.
30	38528009	Belt
31	38781003	Dirt Seal (use w/27212011 Motor)
	34284001	Motor Baffle (Use w/43177073 Motor, Models S3127, S3147, S3161 - After Jan. 1980)
32	27212011	Motor (use w/21434224 Screw, (2))
	43177073	Motor w/Mounting Tab (Use w/21447007 Screw (1), Models S3127, S3147, S3161 - After Jan. 1980)

Ref. No.	Part No.	Description
33	36235001	Furniture Guard - S3061, S3061-030
	36235017	Furniture Guard - LY -
34	42241041	Nozzle Body Assm.
35	32543002	Wheel Shaft
36	163768	Strain Relief
37	21434224	Screw (2) (Use w/27212011 Motor)
	21447007	Screw (1) Use w/43177073 Motor) (Models S3127, S3147, S3161, After Jan. 1980)
38	36218005	Isolation Grommet (3)
39	52125003	Nameplate - S3061, S3061-030
	51661006	Nameplate - S3077
	51375027	Nameplate - S3057, S3059, S3059-030, S3127, S3161
40	39383014	Lens - S3061, S3061-030 S3077
41	42252001	Housing Assm. - S3061, S3061-030
	42252002	Housing Assm. - S3077
42	47171002	Dirt Finder Socket Assm. - S3061, S3061-030, S3077
43	46321002	Cord
44	12910	Tube Clamp - S3061, S3061-030, S3077
45		Electrical Tape - 1/2" Wide
	48438084	Powered Nozzle Comp. - S3057, S3059, S3059-030, S3079, S3079-030, S3079-035, S3081, S3083, S3083-030, S3127, S3147, S3161, S3093
	48438055	Powered Nozzle Comp. - S3061, S3061-030, S3077
	48438081	Powered Nozzle Comp.
	48438120	Powered Nozzle Comp. - S3149

ITEMS NOT ILLUSTRATED

51638007	Handle Release Label - S3077, S3083
34618017	Bracket Assm. (Use w/27212011 (Plastic Case) when installing on old style Nozzle Body with two mounting holes)

Models S3057, S3059, S3059-030, S3061, S3061-030, S3077, S3079, S3079-030, S3079-035, S3081, S3083, S3083-030, S3093, S3127, S3131, S3131-030, S3133, S3135, S3137, S3139, S3139-035, S3141, S3147, S3149, S3153, S3161, S3173

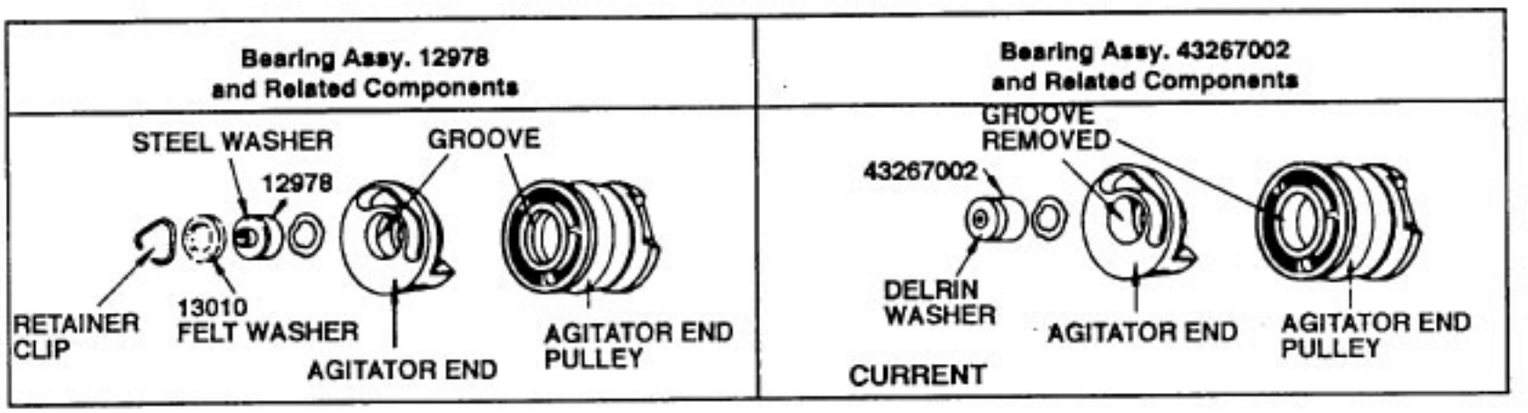

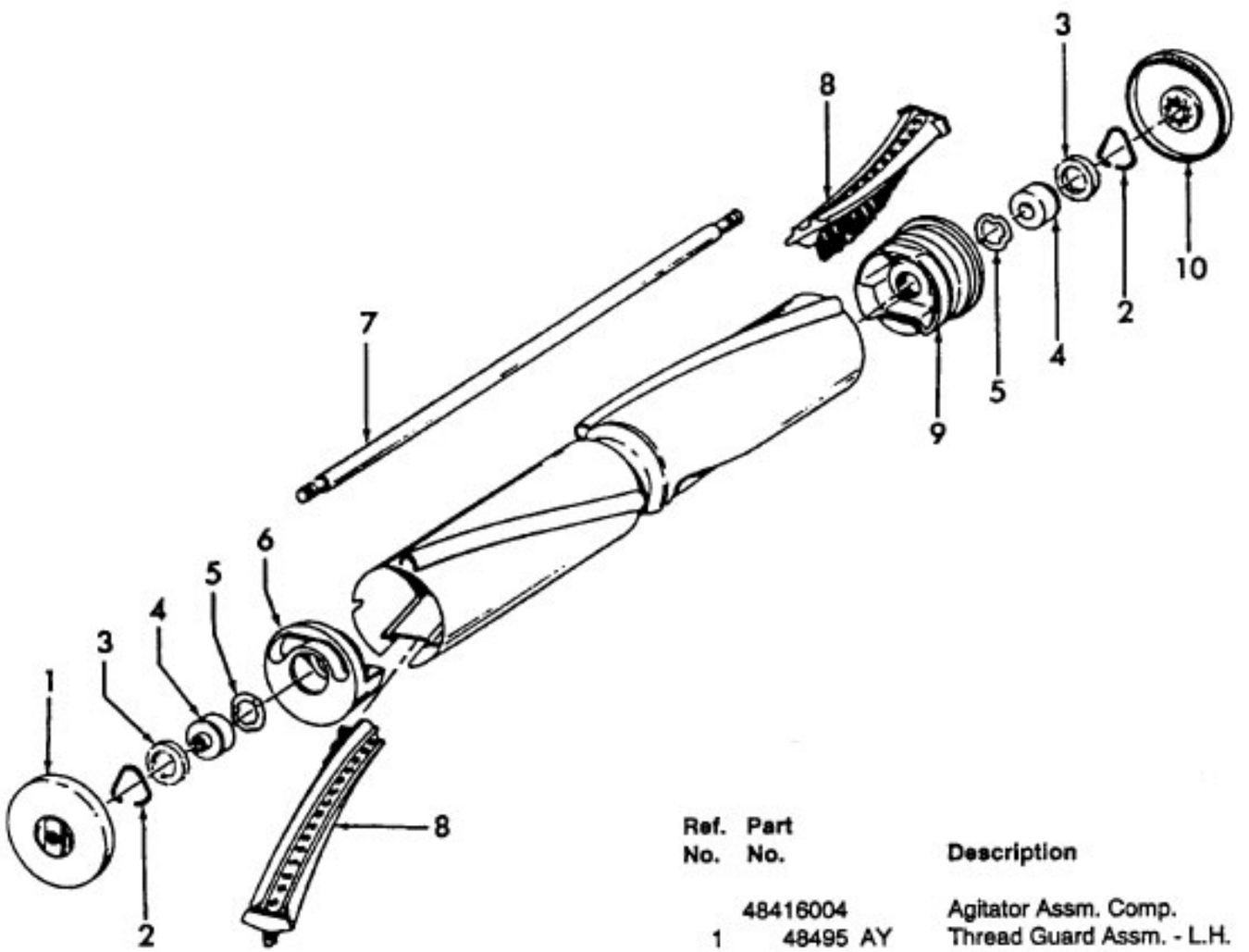

Ref. No.	Part No.	Description
	48416004	Agitator Assm. Comp.
1	48495 AY	Thread Guard Assm. - L.H.
2	12987	Retainer Clip (2)
3	13010	Washer - Felt (2)
4	12978	Agitator Bearing Assm. (2) (Use w/Item 2 & 3)
	43267002	Agitator Bearing Assm. (2) (Current)
5	21347003	Washer (2)
6	160542	Agitator End Assm.
7	160070	Agitator Shaft
8	160646 BZ	Agitator Brush Back Assm. (2)
9	160538	Agitator End Pulley
10	12985 AY	Agitator Thread Guard Assm. - R.H.

Cleaning Tools

Models S3059, S3059-030, S3061, S3061-030, S3079, S3079-030, S3083, S3083-030, S3127, S3147, S3149, S3161

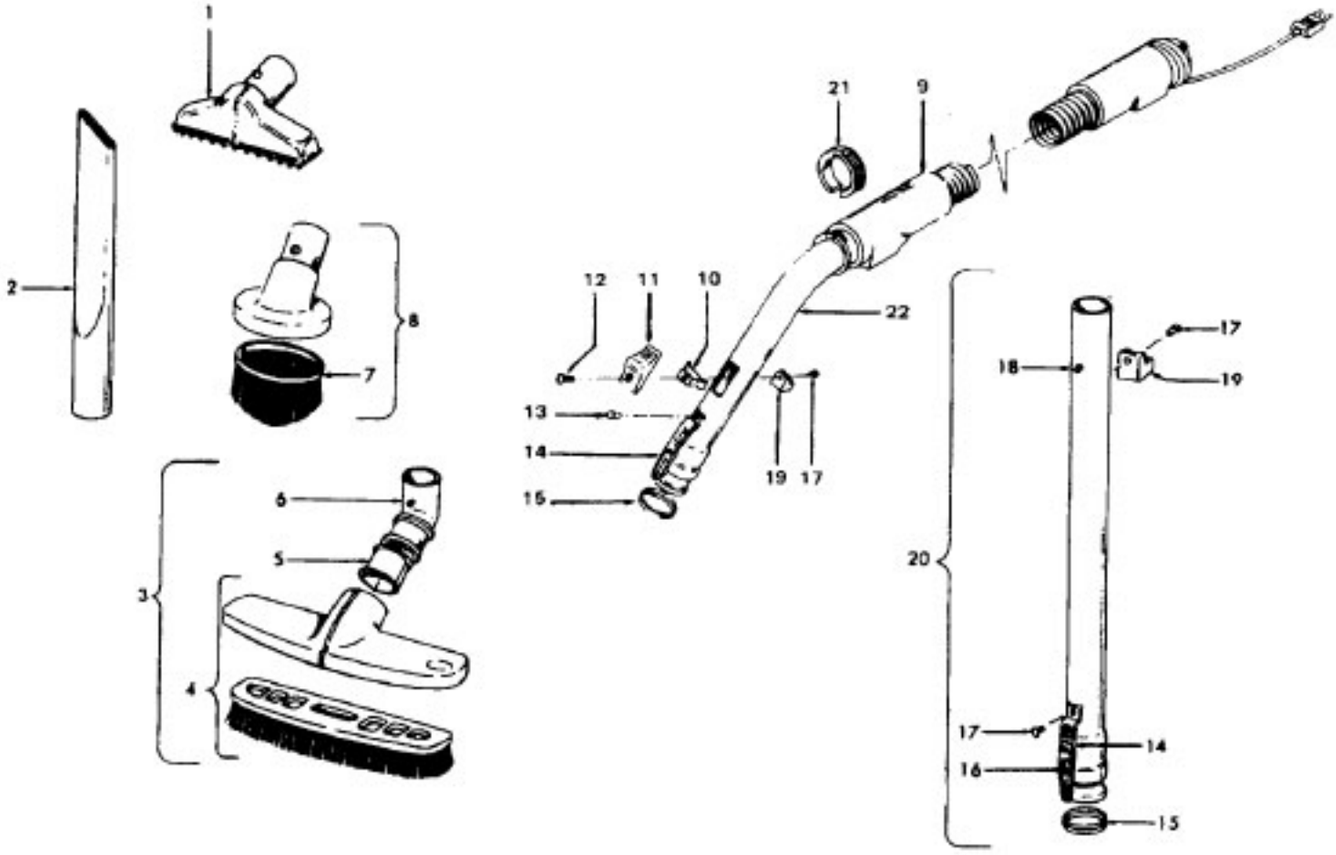

Ref. No.	Part No.	Description
1	43414057	Furniture Nozzle Comp.
2	38617017	Crevice Tool
3	13077JM	Floor Brush Assm.
	43414073	Floor Brush Assm.
4	13155JM	Brush Back & Nozzle Assm. (Use w/13077JM)
5	13276	Floor Brush Swivel Bushing (Use w/13154JM)
	33712007	Split Ring (Use w/38644040)
6	13154JM	Swivel Connector (Use w/13077JM)
	38644040	Swivel Connector (Use w/48473025
7	13263BZ	Brush (Use w/l 61851 JM)
8	161851JM	Dusting Brush Comp.
	43414064	Dusting Brush (One Piece)
9	43438022	Current Carrying Hose & Tube
	43433085	Current Car in Hose

Ref. No.	Part No.	Description
10	13257BZ	Suction Regulator Support
11	13142AG	Suction Regulator Control
12	13275	Screw
13	12783	Rivet
14	12846AG	Tube Latch (2)
15	12845JM	Gasket (2)
16	12772	Rivet
17	12783	Rivet (2)
18	12763AW	Rivet
19	36171005	Cord Clip
20	43453085	Ext. Tube (2) (17")
	43453052	Ext. Tube 20 - AX- S3127, S3161
21	36153009	Latch Ring
22	43468055	Hose Tube (Early)
	43453023	Ext. Tube - AX- 20 - S3127, S3161 (Current)
	170110	Shag Vac Rake - S3161 S3149