This Owner's Manual is provided and hosted by Appliance Factory Parts.

Appliance Factory Parts
Experts in BBQ, Humidifier, & Appliance Parts
1-800-955-7075

HOOVER S3445
Owner's Manual

Shop genuine replacement parts for HOOVER S3445

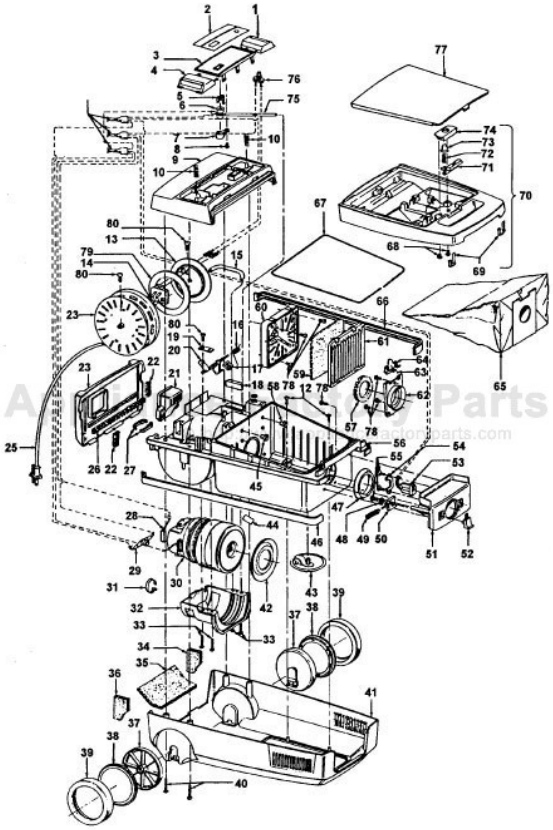

Find Your HOOVER Vacuum Cleaner Parts - Select From 1456 Models

-------- Manual continues below part list --------

Available Replacement Parts for HOOVER S3445

H-4010037M	HOOVER OEM PAPER BAG 3 PACK
H-38765006	Filter for Hoover 1 PACK, Aftermarket
H-43414073	Floor brush.
H-43414064	DUSTING BRUSH (ONE PEICE)
HR-5000	EXTENSION TUBE

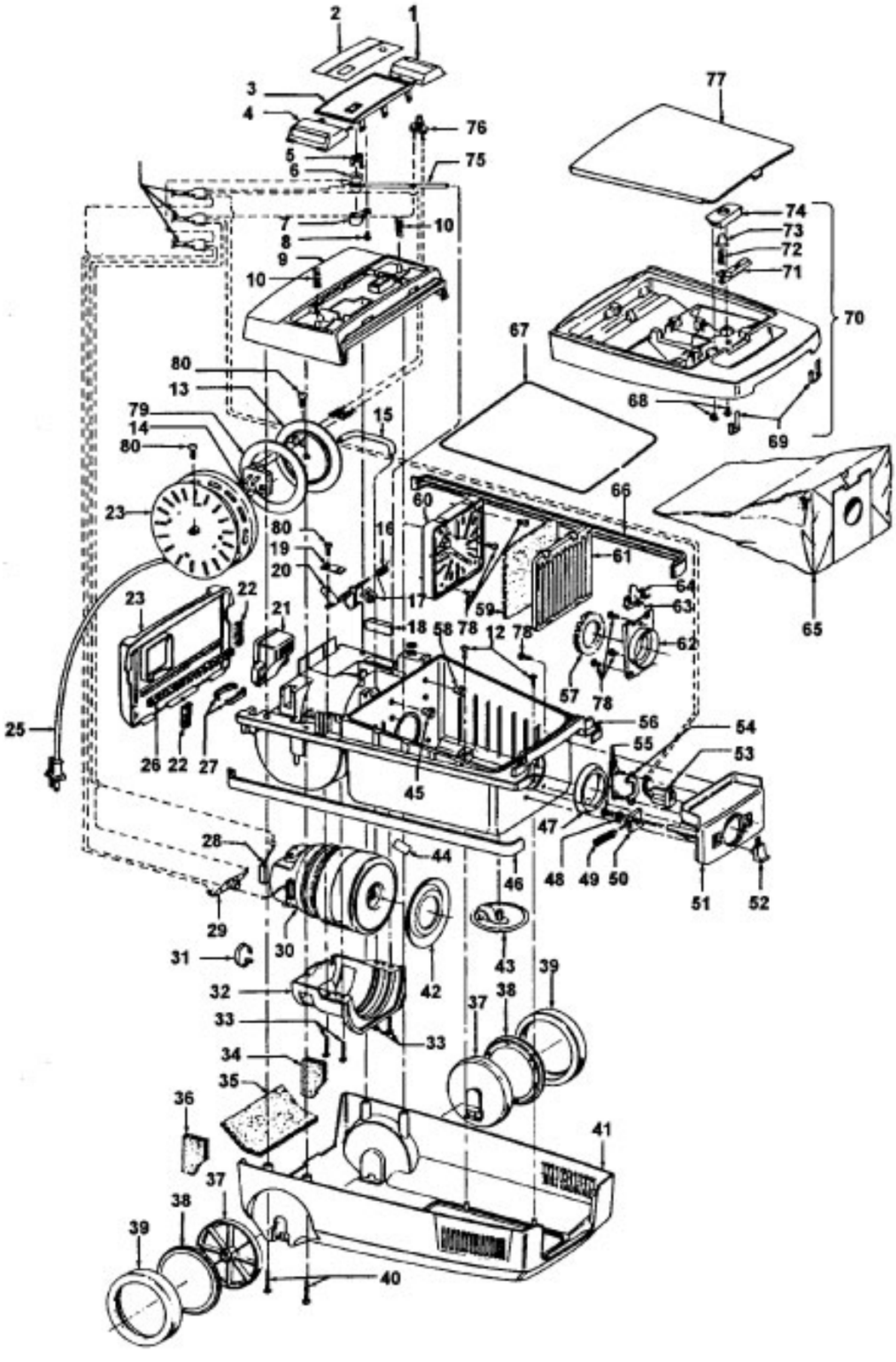
2
1
3
4
5
6
76
75
77
7
8
9
10
10
74
73
72
71
70
67
80
13
79
14
80
15
68
69
23
60
66
80
19
20
16
61
64
63
65
23
22
21
17
59
18
58
78
12
78
62
57
78
25
26
22
27
56
54
55
53
45
47
28
44
46
48
49
50
51
52
29
30
42
43
31
32
33
33
37
38
39
34
35
36
41
37
38
39
40

Ref. No.	Part No.	Description
1	38434003	Switch Pedal - AG
2	51375086	Nameplate - S3277, S3277-040
	51375111	Nameplate - S3445
	51371023	Nameplate - S3623
3	37214110	Control Panel - MS
	37214075	Control Panel - MY
	37214161	Control Panel - AG
4	38434008	Cord Pedal - AG
5	39383095	Lens
6	27343213	Bag Indicator
7	36131052	Retainer Clip
8	160508	Screw
9	37221024	Rear Deck - MP - S3277, S3277-040
	37221023	Rear Deck - ML - S3445
	37221029	Rear Deck - ABB - S3623
10	38313021	Spring
11	18972	Terminal-insulated
12	21447003	Screw
13	36924005	Brush Block Bracket
14	47342008	Brush Block
15	31725018	Vent Tube
16	38356006	Spring
17	36222008	Brake Pad
18	34132014	Foam Pad
19	36131017	Retainer
20	38458012	Brake Arm
21	37926006	Plug Housing - MS - S3277, 3277-040
	37926005	Plug Housing - MY - S3445
	37926009	Plug Housing - AG - S3623
22	34132008	Seal
23	46831025	Cord Reel
24	42224005	Rear Panel & Seals - AG -S3277, S3277-040, S3623
	42224001	Rear Panel & Seals - MY - S3445
25	46383308	Cord - AG - 23
26	34123025	Seal
27	35253004	Ferrule
28	167679	Carbon Brush
29	28382111	Hi-Limit Thermostat
30	43578037	Motor - (P - 192)
	43578082	Motor - (P - 192)
31	27479307	Wire Tie
32	37196110	Motor Cap
33	21447072	Screw
34	34214002	Seal-LH
35	34172026	Seal
36	34214001	Seal-RH
37	43244021	Inside Wheel
38	32811003	Outside Wheel - MR
	32811012	Outside Wheel - AG
	32811013	Outside Wheel - ABB
39	38522050	Tire - MS - S3277, S3277-040
	38522053	Tire - S3445, S3623
40	21447121	Screw
41	37212138	Lower Case - AG -S3277, S3277-040
	37212133	Lower Case & Seal - MX - S3445
	37212139	Lower Case & Seal - ABB - S3623
42	38784013	Seal
43	43244025	Caster Wheel
44		Tape
45	32271003	Tube Adapter
46	36235035	Furniture Guard- RH- MS- S3277, S3277-040
	36235023	Furniture Guard - RH - MY - S3445
	36235075	Furniture Guard - RH - AG - S3623
47	38784015	Seal
48	21328071	Washer
49	38313017	Spring
50	36152005	Slide Latch
51	37218018	Hose Module- MR- S3277, S3277-040, S3623
	37218017	Hose Module - MX - S3445
52	38421011	Slide Button
53	46325018	Receptacle - 2W
54	36171009	Clamp
55	21447203	Screw
56	37215111	Main Frame - AG
57	38784017	Seal
58	32282008	Tube Adapter
59	38765006	Filter
60	36434105	Back Support
61	37944004	Filter Retainer
62	36425032	Bag Collar Support
63	38351006	Spring
64	36153026	Bag Latch
65	4010037M	Paper Bag - 3 Pk.
66	36235025	Furniture Guard- LH- MS- S3277, S3277-040
	36235024	Furniture Guard - LH - MY - S3445
	36235074	Furniture Guard - LH - AG - S3623
67	31526003	Seal
68	21447017	Screw
69	21378157	Spring Clip
70	42217106	Bag Lid - AG - S3277, S3277-040, S3445
	42217137	Bag Lid - ABB - S3623
71	36152009	Latch - MP - S3277, S3277-040
	36152013	Latch - S3445
	36152014	Latch - ABB - S3623
72	38313017	Spring
73	38411053	Pop-Up Button
74	36131048	Latch Retainer
75	31727025	Vent Tube-indicator
76	47511030	Switch
77	36433024	Tool Lid - AAL (Clear)
78	21447003	Screw
79	31178027	Seal
80	21447003	Screw
	56513207	Owner Manual
	56513315	Owner Manual - S3623
	58185120	Carton - S3277, S3277-040
	58185124	Carton - S3445
	58185150	Carton - S3623
	58461024	Rear Support
	58461025	Front Support
	58216010	Bottom Pad
	58333010	Mid Pad
	58369022	Bottom Support

CLEANING TOOLS - S3277, S3277-040, S3623 - (P- 150)

38617017	Crevice Tool - AG
43414057	Furniture Nozzle - AG
43414064	Dusting Brush - AG
43414073	Floor Brush - AG
43433080	Hose- 2W
43453052	Extension Tube-AX-20
48438044	Power Nozzle (P. 145)
48438126	Power Nozzle -ABB- S3623 - (P - 145)

CLEANING TOOLS - S3445 - (P. 150)

38617017	Crevice Tool - AG
43414057	Furniture Nozzle - AG
43414064	Dusting Brush - AG
43414073	Floor Brush - AG
43433080	Hose- 2W- MX (P - 148)
43453052	Extension Tube - 20 -AX
48438044	Power Nozzle (P - 145)

ITEMS NOT ILLUSTRATED

46831076	Brush Block (Cord Reel)

Power Nozzle 48438112 + (Use 48438044)
48438124 - ABB, 48438126 - ABB
48438226 - AG T - Plug,
48438044 - AG - Standard Plug

Model S3277, S3277-040, S3279, S3491, S3493, S3623, S3625

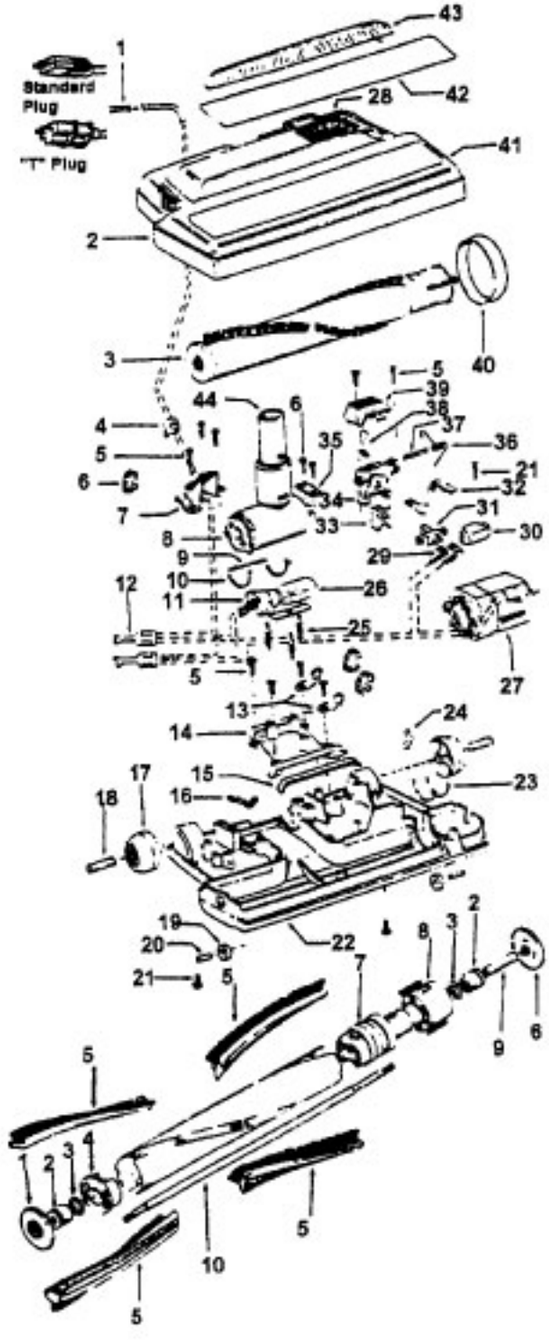

Ref. No.	Part No.	Description
1	46321088	Cord - AG - Standard Plug
	46321009	Cord - S3625
2	36231103	Furniture Guard - MS - S3277, S3277-040, S3279
	36231096	Furniture Guard - MY
3	48416030	Agitator - 4B
4	163768	Strain Relief
5	21447041	Screw
6	27479307	Wire Tie
7	36131044	Retainer Housing - MP
	36131067	Retainer Housing - AG - S3491, S3493, S3623, S3625
8	43461021	Nozzle Connector - AG (incl. Item 44)
9	34112005	Seal
10	34337003	Seal
11	47171009	Lamp Socket
12	18972	Insulated Terminal (3 Wire)
13	45517	Wire Holder
14	42256098	Dust Cover
15	34123017	Seal
16	35276001	Detent Spring
17	32175025	Wheel - AG
18	31523005	Wheel Shaft
19	32761001	Wheel
20	31522004	Wheel Shaft
21	21447007	Screw
22	42246121	Base Plate Assm. (incl. Items 17,18,19,20,23,24)
23	34337004	Lower Seal
24	13261AY	Rib Shoe
25	36218005	Grommet
26	27317307	Lamp - 15
27	43177073	Motor
28	51865002	Indicator Lens
	51865018	Indicator Lens
29	27666702	Terminal
30	37258082	Shield
31	281770KD	Switch
32	51151053	Indicator - PH
33	34361001	Switch Actuator
34	42262032	Housing
35	36131017	Retainer
36	38353007	Torsion Spring
37	31523006	Pivot Pin
38	38458002	Depressor
39	38433054	Switch Pedal - MR
	38433067	Switch Pedal - MW - S3491, S3493, S3623, S3625
40	38528011	Belt
41	42252189	Nozzle Body-AG - (incl. Items 2,43)
42	52125092	Nameplate - S3277, S3279
	52125114	Nameplate - S3277-040, S3491, 4393
	52125133	Nameplate - S3623, S3625
43	39383060	Lens
44	43457037	Swivel Tube - AG

Agitator 48416030

1	48495AY	Bearing
2	43267002	Bearing
3	21347003	Washer
4	36422001	End
5	48445017	Agitator Brush
6	41435018	Thread Guard
7	38537008	End Pulley
8	48418001	Brush Ring
9	31722019	Spacer
10	32724005	Shaft

Dimension Hose
43433087 + Hose - 2W - AAP 7-1/2'
43433080 Hose - 2W - AAB 6'

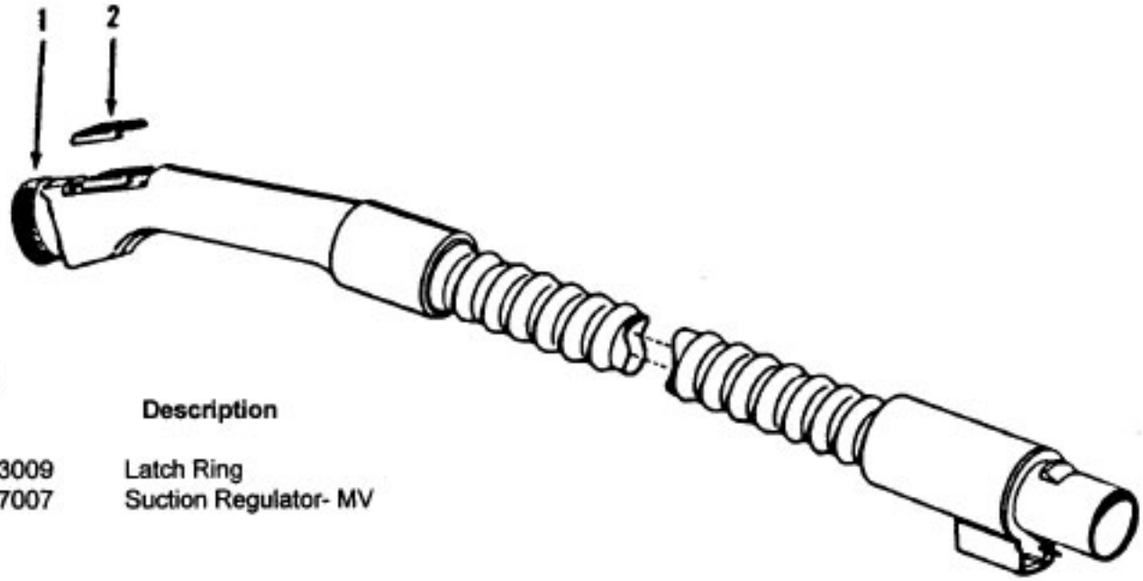

Ref. No.	Part No.	Description
1	36153009	Latch Ring
.	34777007	Suction Regulator- MV

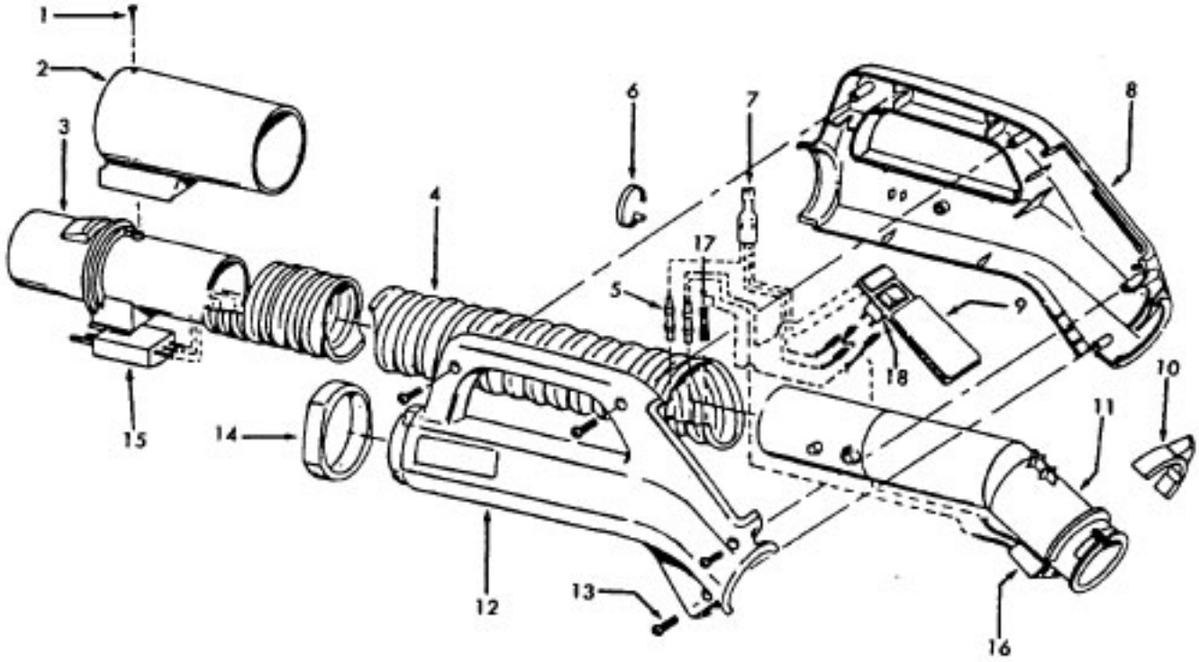

Ref. No.	Part No.	Description
	43433025	Hose - 3W - MV
	43433082	Hose - 3W - MV
1	21124102	Drive Screw
2	38634067	Grip - MV
3	38638030	Hose Connector
4	43431014	Hose - 3W
5	31712006	Insulating Sleeve
6	27479307	Wire Tie
7	12227	Insulated Terminal
8	48663161	Grip - LH - MV
	39461008	Grip - LH - MV - (43433025)
9	47551025	Grip Control Panel - AG (incl. Items 6, 7,17)

Ref. No.	Part No.	Description
10	36153029	Latch Ring
11	38646034	Inner Tube
12	48663161	Grip - RH - MV
	39461007	Grip - RH - MV - (43433025)
13	21447124	Screw
14	36131087	Retainer Ring
15	46521008	Plug - 3 Pin
16	46325024	Connector Repair Kit - (43433082 Only)
17	27613003	Wire Slice
18	28161051	Switch

Cleaning Tools - Dimension

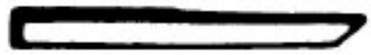

38617017 Crevice Tool - AG

43414057 Furniture Nozzle - AG

43414064 Dusting Brush - AG

38644020 Swivel Connector

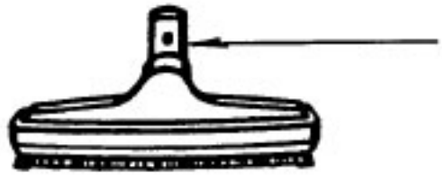

43414073 Floor Brush - AG

48447001 + Brush Back

3863801P Extension Tube - AG

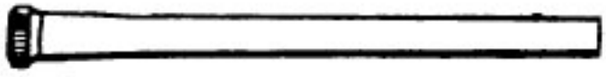

43453058 + Ext. Tube - BL - 20
43453052 Ext. Tube - AX - 20

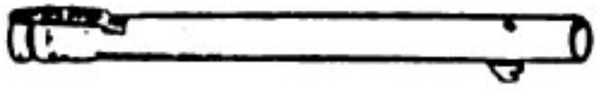
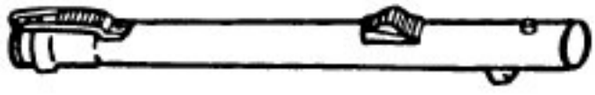
43453023 Ext. Tube - AX - 20 w/c