This Owner's Manual is provided and hosted by Appliance Factory Parts.

Appliance Factory Parts
Experts in BBQ, Humidifier, & Appliance Parts
1-800-955-7075

HOOVER S3395
Owner's Manual

Shop genuine replacement parts for HOOVER S3395

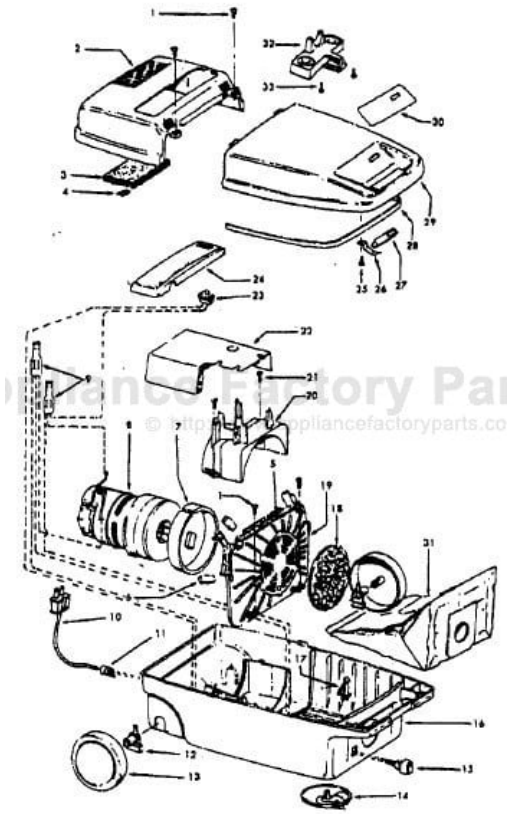

Find Your HOOVER Vacuum Cleaner Parts - Select From 1456 Models

-------- Manual continues below part list --------

Available Replacement Parts for HOOVER S3395

H-4010028K	BAG OEM HOOVER (3 PACK) K
HR-1810	FILTER HOOVER MESH FILTER
48414036	HOOVER ELITE BRUSH ROLLER
H-43267002	AGITATOR BEARING ASM
H-43414073	Floor brush.
H-43414064	DUSTING BRUSH (ONE PEICE)
HR-5000	EXTENSION TUBE
HR-1050	BELT FOR HOOVER

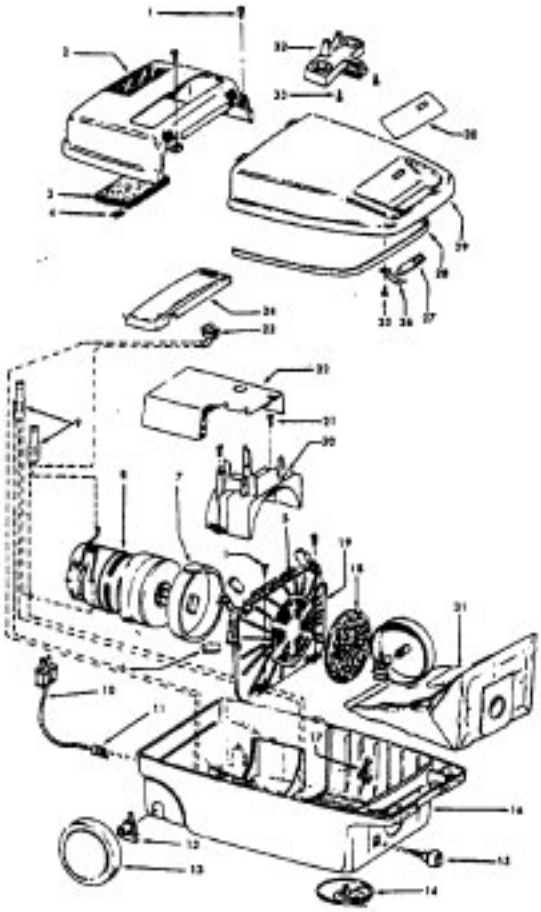

Note: Foam muffler not used on model S3391

Ref. No.	Part No.	Description
1	21447041	Screw
2	37195102	Motor Cover - ABN
	37195105	Motor Cover - ABM - S3391
3	34163003	Diffuser
4	21366004	Speed Nut
5	34133007	Seal
6	34132006	Pad
7	34143002	Seal
8	43577112	Motor - 2.2 - (P-1 74) - S339 1, S3395
	43577011	Motor Assem. Comp. - S3391 Model S3395-040 After Serial No. 059500011701
9	18972	Insulated Terminal
10	46363305	Attach. Cord - AG - 20'
11	27482301	Strain Relief
12	38511015	Wheel Bearing - AG
13	38522061	Wheel - AG
14	41432040	Wheel Carrier
15	46326079	Receptacle - AG
16	37223273	Main Body - ABN
	37223290	Main Body - ABM - S3391
17	36151015	Latch
18	31114009	Filter
19	36426012	Bulkhead
20	36321011	Motor Retainer
21	21447072	Screw
22	34267021	Foam Muffler
23	28161063	Switch
24	37214052	Control Panel
25	21447027	Screw
26	36172046	Spring Clip
27	51151010	Bag Indicator
28	38781010	Lid Seal
29	42212123	Bag Housing Lid - ABN
	42212133	Bag Housing Lid - ABM - S3391
30	51669055	Nameplate
	52125140	Nameplate - S3395-040
	52125143	Nameplate - S3391
	51879008	Check Bag Label
31	4010028K	Paper Bag - 3 Pk.
32	36433087	Tool Rack - ABN
	36433102	Tool Rack - ABM - S3391
33	21447003	Screw
	56513319	Owner Manual
	56513331	Owner Manual - S3395-040, S3391
	59814040	Carton
	59814070	Carton - S3395-040
	59814076	Carton - S3391
	58366069	Mid Pad
	58461023	Top Support

CLEANING TOOLS - (P-92)

	38614024	Furniture Nozzle - AG
	38617017	Crevice Tool - AG
	43414064	Dusting Brush - AG
	43414073	Floor Brush - AG
	43433064	Hose - 2W - AAP - S/C
	43433111	Hose - 2W - AG - S/C - Spirit
	43453052	Ext. Tube - AX - 20 - Str. S3391
	43453058	Extension Tube - BL - 20
	43453052	Extension Tube - 20 - AX
	48438254	Power Nozzle - AAP - S3395 - (P-252)
	48438257	Power Nozzle - ABE - S3395 -040 - (P -252)
	48438235	Power Nozzle - AAP - S3391 (P.252)

Items not Illustrated

	162961	Insulating Pad
	47534018	Thermal Protector - S3395-040, S3391 (models produced prior to 1/97 only)

Motor - 43577112 +
43577008 +

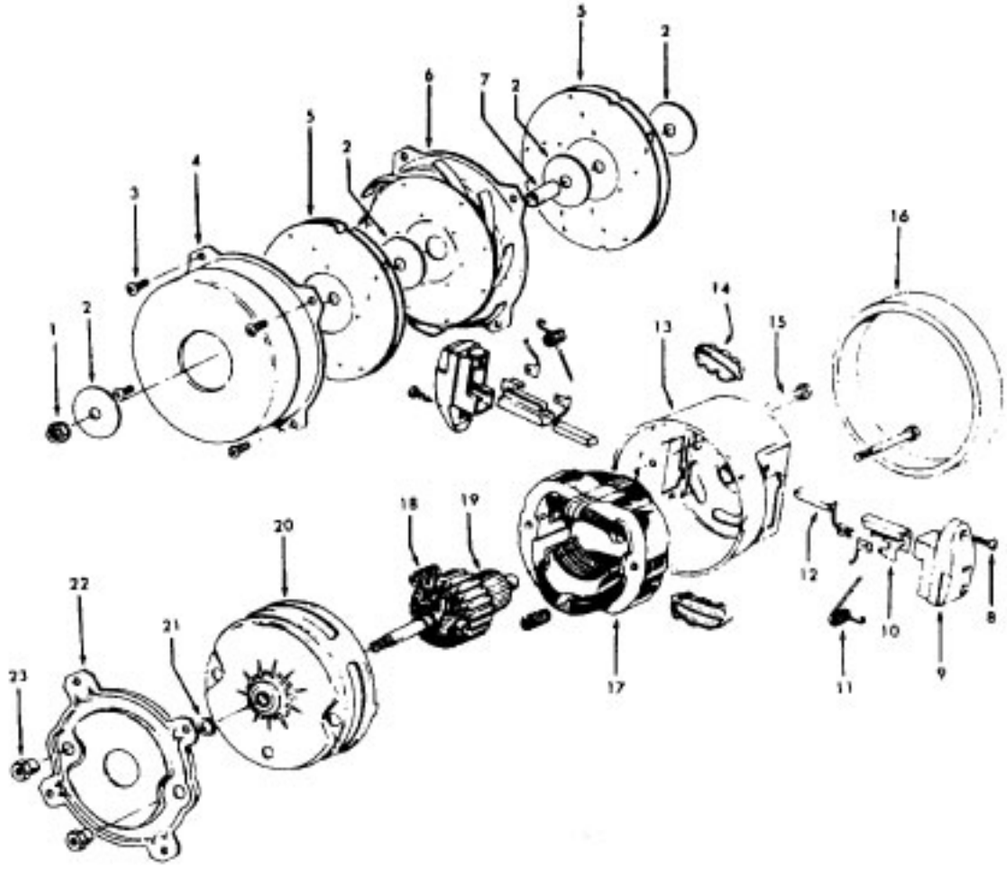

Ref. No.	Part No.	Description
1	33426001	Nut
2	21312701	Washer
3	21434224	Screw
4	37191016	Outerstage Housing
5	43566017	Fan
6	43551005	Interstage
7	31742010	Spacer
8	21429406	Screw
9	167696AG	Brush Carrier
10	N/A	Brush Holder - Use Brush Carrier Assem. 47318008 (Incl. It. 9 - 12)
11	38353004	Spring
12	167681	Carbon Brush
13	42937003	Motor Housing - Upper
14	169702BZ	Bushing
15	33421004	Bolt
16	31195002	Air Baffle
17	45311051	Field Coil - 1" Stack Height
	45312037	Field Coil - 3/4" Stack Height
18	167721FW	Compression Spring
19	44765171	Armature - 1 " Stack Height
	44765217	Armature - 3/4" Stack Height
20	37191085	Motor Housing - Lower
21	31148002	Spacer
22	36322002	Mounting Plate
23	167695EF	Nut

Powernozzle

48438235 - S3525, S3535
48438251 - S3399
48438254 - S3395
48438235 - S3420, S3520

48438076 - S3391
48438257 - S3559, S3395-040
48438261 - S3561

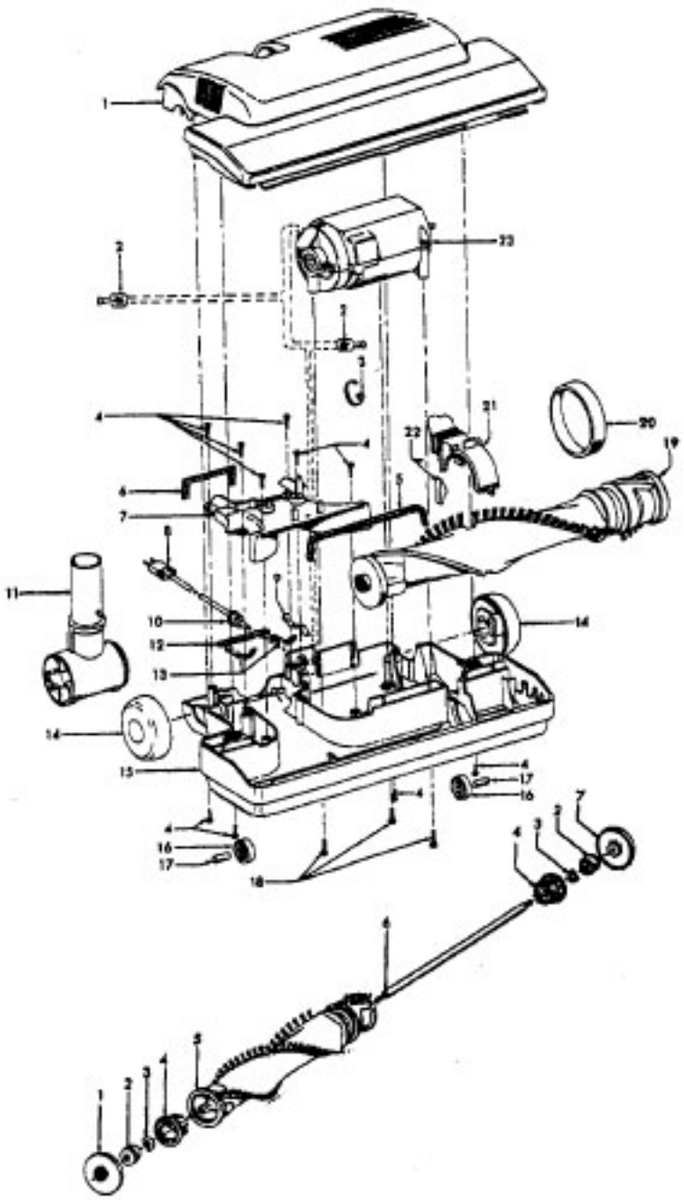

Ref. No.	Part No.	Description
1	37241004	Nozzle Body - ABY - S3561
	37241138	Nozzle Body - AAP - S3525, S3535
	37241137	Nozzle Body - AAP - S3399
	37241139	Nozzle Body - AAP - S3395
	37241140	Nozzle Body - ABE - S3395-040, S3559
	37241144	Nozzle Body - ABM - S3391
	42252A55	Nozzle Body - AG - S3420, S3520
2	12227	Insulated Terminal
	27618508	Wire Connector
3	27479307	Lead Wire Tie
4	21447003	Screw-Self Tapping (10)
5	34123039	Duct Cover Seal
6	34253018	Rear Seal
7	42256103	Duct Cover Assem. (Incl. Items 5,6)
8	46321088	Cord -AG
9	35276008	Detent Spring
10	163768	Strain Relief
11	43482106	Nozzle Connector - AG
12	34112007	Seal
13	34122014	Seal (2)
14	43244043	Wheel Assem.
15	42246115	Base Plate Assem. (Incl. Items 16,17)
	42246114	Base Plate Assem. - ABR - S3395-040, S3391 S3559 (Inc. Items 16, 17)
	42246115	Base Plate Assem. - AG - S3420, S3520 (Inc. items 16, 17)
16	32761001	Wheel
17	31522004	Wheel Shaft
18	21479801	Screw (3)
19	48414079	Agitator Assem.
20	38528011	Belt
21	36923008	Belt Guard Assem.
22	13261AY	Rib Shoe
23	43177062	Motor Assem. Comp.

Agitator 48414079

Ref. No.	Part No.	Description
1	36423016	Thread Guard - RH
2	43267002	Agitator Bearing Assem. (2)
3	21347003	Conical Washer (2)
4	36422022	Agitator End (2)
5	48414051	Agitator Body
6	32724013	Agitator Shaft
7	36423017	Thread Guard - LH

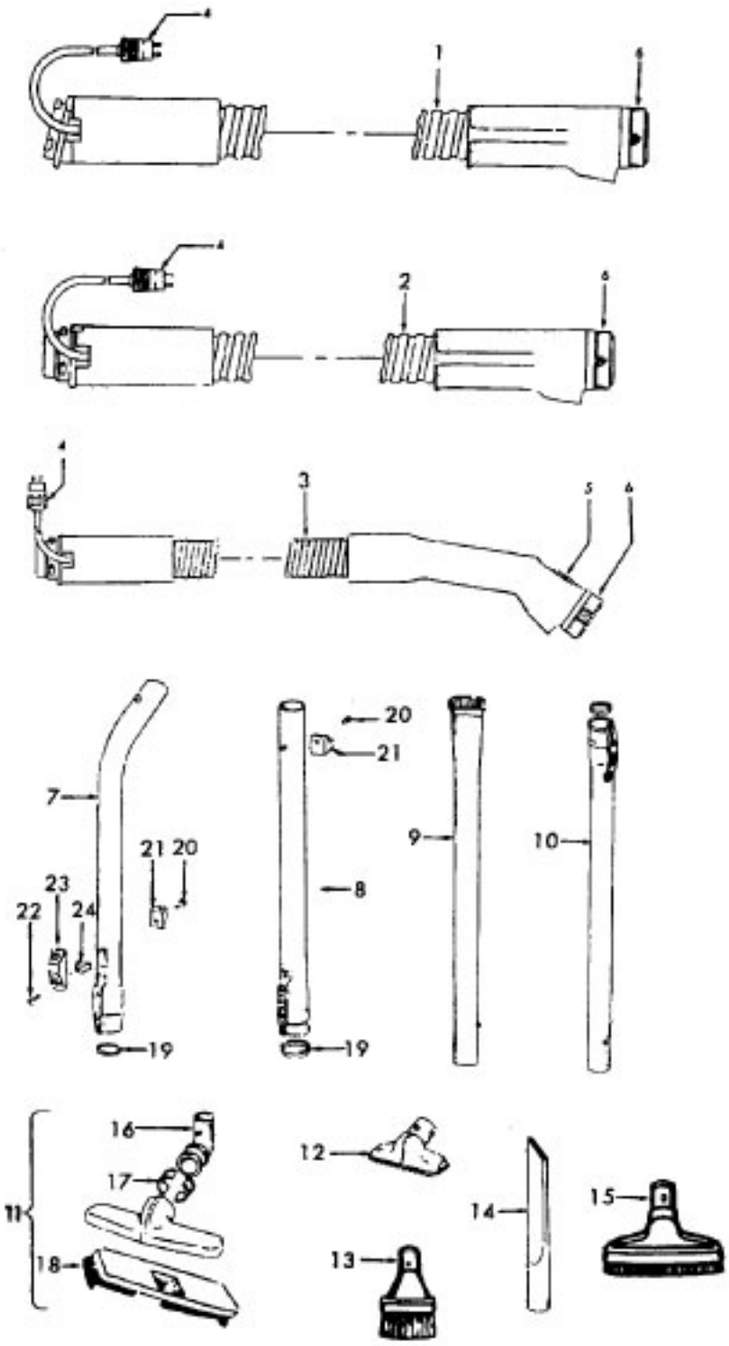

Ref. No.	Part No.	Description
1	43433085	Hose - AAP - Celebrity
2	43433032	Hose - JM - Spirit - 5-1/2'
3	43433067	Hose - AAP - Spirit - 5-1/2'
	43433081	Hose - MV -S/C- Spirit - 5-1/2'
	43433084	Hose - AAP - S/C - Spirit - 7'
	43433111	Hose - 2W - AG -S/C - Spirit
4	46321076	Cord Repair Kit
5	34777005	Suction Reg. Control - AG
	34777007	Suction Reg. Control - MV
6	36153009	Latch Ring - AG
7	43468055	Hose Tube - BL - 14
8	43453086	Extension Tube - BL - 22
	43453035	Extension Tube - AX - 22
	43453052	Extension Tube - 20 - AX (Gray Clip)
	43453058	Extension Tube - BL - 20 (Gray Clip)
9	3863801P	Extension Tube -Poly - AG
10	43453027	Extension Tube
11	43414073	Floor Brush - AG
12	38614023	Furniture Nozzle - 1 Pc. - 17
	43414057	Furniture Nozzle - AG
	38614024	Furniture Nozzle - AG
13	43414064	Dusting Brush - AG
14	38617017	Crevice Tool - AG
15	43414015	Furniture Brush - JM
	43414016	Furniture Brush - AG
16	38644040	Swivel Connector - JM
	38644020	Swivel Connector - AG
17	33712007	Split Ring
18	48447001	Brush Back
19	12845JM	Gasket
20	12783	Rivet
21	36171008	Cord Clip - MV
	36171005	Cord Clip - AG
22	13275	Screw
23	13142AG	Suction Control
24	13257BZ	Support