This Owner's Manual is provided and hosted by Appliance Factory Parts.

Appliance Factory Parts
Experts in BBQ, Humidifier, & Appliance Parts
1-800-955-7075

HOOVER S3535 Owner's Manual

Shop genuine replacement parts for HOOVER S3535

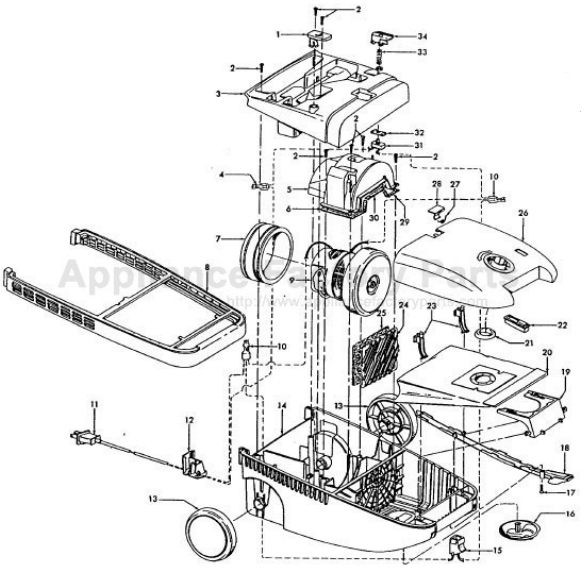

Find Your HOOVER Vacuum Cleaner Parts - Select From 1456 Models

-------- Manual continues below part list --------

Available Replacement Parts for HOOVER S3535

H-4010064S	BAG OEM HOOVER (3 PACK)
48414036	HOOVER ELITE BRUSH ROLLER
H-43267002	AGITATOR BEARING ASM
H-43414073	Floor brush.
H-43414064	DUSTING BRUSH (ONE PEICE)
H-38765009	SECONDARY FILTER
HR-5000	EXTENSION TUBE
HR-1050	BELT FOR HOOVER

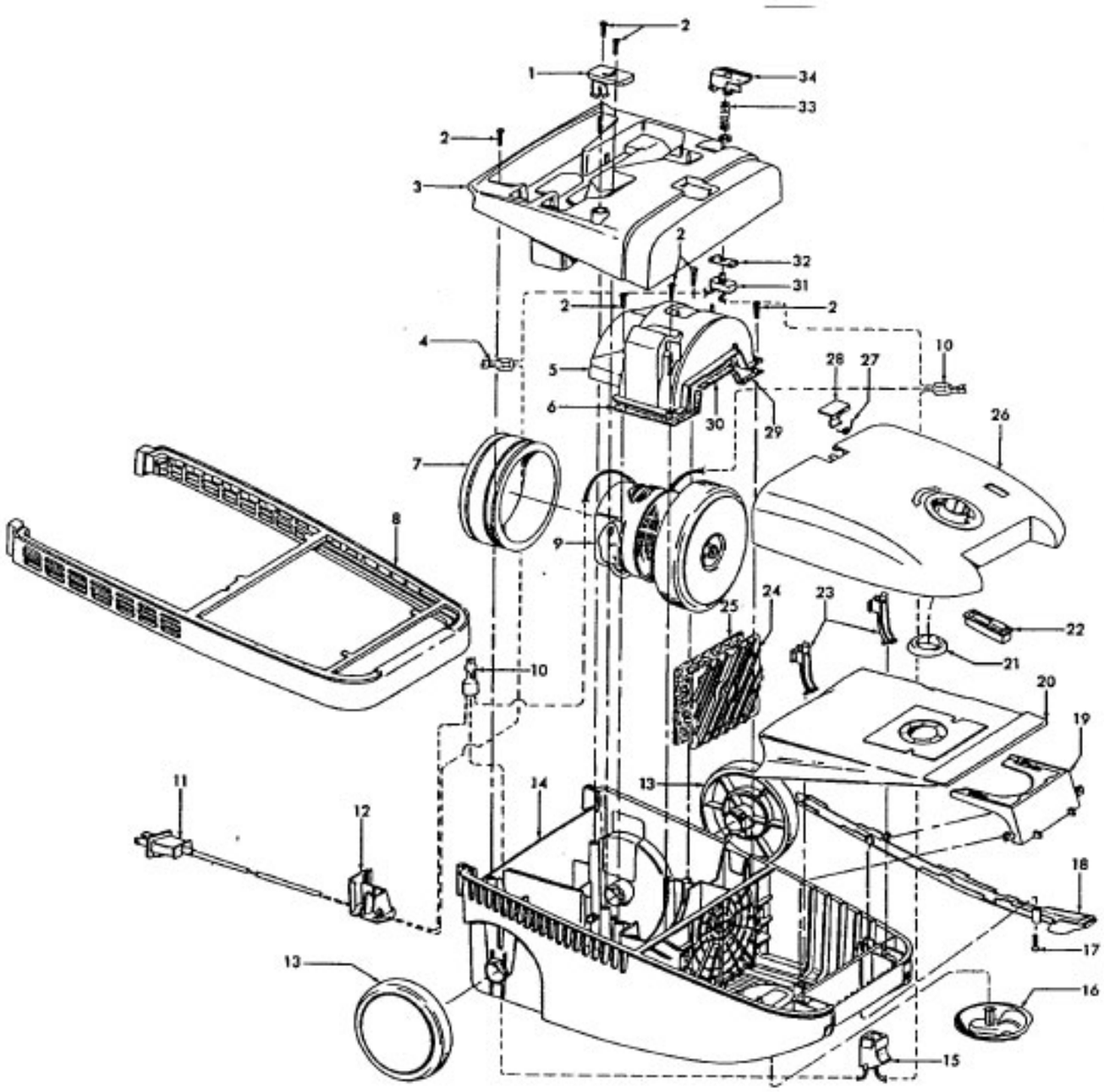
2
1
34
33
2
3
2
32
31
2
2
4
5
28
27
10
6
30
29
26
7
8
9
24
23
25
22
21
10
20
19
11
14
13
12
18
17
13
16
15

Ref. No.	Part No.	Description
1	39442034	Cord Wrap - AG
2	21447217	Screw (7)
3	41426093	Motor Cover Assm. - ABC - S3535 (Incl. Item 1)
	41426051	Motor Cover Assm. - AAR - S3545 (Incl. Item 1)
	41426096	Motor Cover Assembly - MY - S3549 (Inc. Item 1)
	41426118	Motor Cover Assem. - MB - S3520 (Inc. Item 1)
4	12227	Insulated Terminal
5	41312040	Motor Retainer Assembly (Inc. items 6, 29, 30)
6	34633003	Retainer Seal - RH
7	36322031	Motor Mount - BZ
8	36235069	Furniture Guard - AG
9	43578071	Motor Assm. (Incl. Item 7) S3535 - 9.7 Amps (S3545 -10.3 Amps) (P-250)
	43576126	Motor Assm. Incl. Item 7 S3535 -9.9 Amps (S3545 - 10.4 Amps) (P-267)
	43576118	Motor Assm. (incl. Item 7) -S3549 (P-249)
	43576184	Motor Assm. (Inc. Item 7) - S3520 (P-266)
10	18972	Insulated Terminal (2)
11	46383289	Attachment Cord - AG
12	36215033	Strain Relief - AG
13	38522065	Wheel - AG (2)
14	42215089	Main Body Assm. (Incl. Items 8,15,17,18)
	42215092	Main Body Assm. S3520 - (Inc. Items 8,15,18)
15	46326059	Receptacle Assm - AAP
	46326082	Receptacle Assm. - AG
16	41432040	Wheel Carrier Assm. - AG
17	21434288	Screw-Self Tapping
18	36218021	Cord Channel Cover - AAP
	36218020	Cord Channel Cover - AG - S3520
19	36424010	Bag Collar Support - AG
20	4010064S	Throw Away Bag Assm. - 3 Pk.
21	36424012	Bag Collar Seal - AG
22	51151010	Bag Indicator
23	36151027	Bag Lid Hinge - AG (2)
24	37944005	Filter Retainer - AG
25	38765009	Secondary Filter
26	42217109	Bag Lid Assm. - ABC - S3535 (incl. Items 21,22,27,28)
	42217110	Bag Lid Assm. - AAR - S3545 (Incl. Items 21,22,27,28)
	42217139	Bag Lid Assm. - MY -S3549 (4.0 PHP) (incl. Items 21, 27, 28)
	42217149	Bag Lid Assm. - MY - S3549 (4.8 PHP) (Incl. Items 21,27,28)
	42217173	Bag Lid Assm. - MB - S3520 (Inc. Items 21, 22, 27, 28)
27	38351009	Torsion Spring - FW
28	36153040	Bag Lid Latch - AG - S3520, S3535, S3549
	36153043	Bag Lid Latch - AAR - S3545
29	34633002	Retainer Seal - LH
30	34123040	Retainer Seal - Center
31	28212026	Switch - with Leads
	28218048	Switch - with Terminals
32	34135014	Switch Mounting Plate - AAP
33	38314022	Spring - FW
	38314026	Spring - S3520
34	38422162	Switch Pedal - AAP- with Post
	38422164	Switch Pedal - AG - w/o Post (Use with 28218048 Switch)
	56513340	Owner Manual
	56513344	Owner Manual - S3520
	59814005	Carton
	58175123	Carton - S3520
	58211011	Bottom Support - Front
	58211012	Bottom Support - Rear
	58216013	Top Support
CLEANING TOOLS (P-240)		
	38617017	Crevice Tool - AG
	43414057	Furniture Nozzle - AG
	43414064	Dusting Brush Assm. - AG
	43414073	Floor Brush - AAP
	43453052	Ext. Tube - 20 - AX
	43433107	Hose - AG (P-251)
	48438235	Powered Nozzle - AAP-S3520, S3535 (P-252)
	48438230	Powered Nozzle - AAP -S3545, S3549 (P-253)

Note: Refer to Data Label on cleaner for reference to Amp Rating.

48438235 - S3525, S3535
48438251 - S3399
48438254 - S3395
48438235 - S3420, S3520

48438076 - S3391
48438257 - S3559, S3395-040
48438261 - S3561

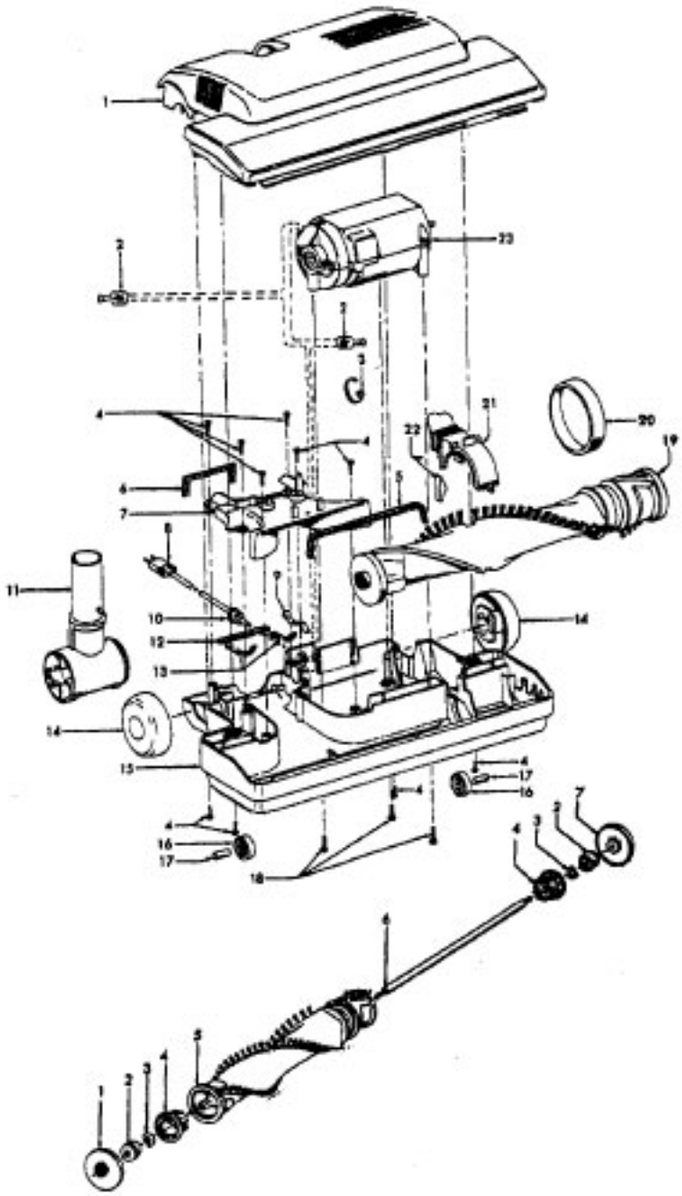

Ref. No.	Part No.	Description
1	37241004	Nozzle Body - ABY - S3561
	37241138	Nozzle Body - AAP - S3525, S3535
	37241137	Nozzle Body - AAP - S3399
	37241139	Nozzle Body - AAP - S3395
	37241140	Nozzle Body - ABE - S3395-040, S3559
	37241144	Nozzle Body - ABM - S3391
	42252A55	Nozzle Body - AG - S3420, S3520
2	12227	Insulated Terminal
	27618508	Wire Connector
3	27479307	Lead Wire Tie
4	21447003	Screw-Self Tapping (10)
5	34123039	Duct Cover Seal
6	34253018	Rear Seal
7	42256103	Duct Cover Assem. (Incl. Items 5,6)
8	46321088	Cord -AG
9	35276008	Detent Spring
10	163768	Strain Relief
11	43482106	Nozzle Connector - AG
12	34112007	Seal
13	34122014	Seal (2)
14	43244043	Wheel Assem.
15	42246115	Base Plate Assem. (Incl. Items 16,17)
	42246114	Base Plate Assem. - ABR - S3395-040, S3391 S3559 (Inc. Items 16, 17)
	42246115	Base Plate Assem. - AG - S3420, S3520 (Inc. items 16, 17)
16	32761001	Wheel
17	31522004	Wheel Shaft
18	21479801	Screw (3)
19	48414079	Agitator Assem.
20	38528011	Belt
21	36923008	Belt Guard Assem.
22	13261AY	Rib Shoe
23	43177062	Motor Assem. Comp.

Agitator 48414079

Ref. No.	Part No.	Description
1	36423016	Thread Guard - RH
2	43267002	Agitator Bearing Assem. (2)
3	21347003	Conical Washer (2)
4	36422022	Agitator End (2)
5	48414051	Agitator Body
6	32724013	Agitator Shaft
7	36423017	Thread Guard - LH

Cleaning Tools - Futura, Spectrum, Dimension, WindTunnel

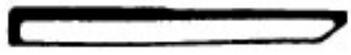

38617017		Crevice Tool - AG

43414057		Furniture Nozzle - AG
43414141		Furniture Nozzle - ABR

43414064		Dusting Brush - AG

38644020		Swivel Connector - AG
38644040		Swivel Connector - AAP

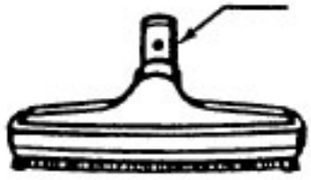

43414073		Floor Brush - AG

48447001	+	Brush Back

36172584		Cord/Wand Clip

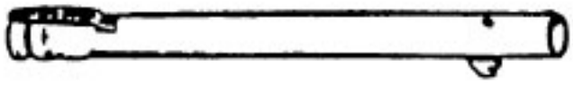

43453052		Ext. Tube - 20 - AX
43453027		Ext. Tube
43453058	+	Ext. Tube - BL 20 w/o Cord Clip

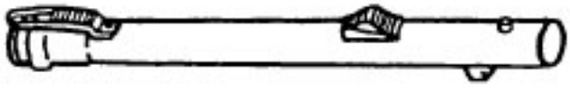

43453023		Ext. Tube - AX 20

43453095		Ext. Tube - AX 20 (Black Storage Clip) (Spectrum)
43453098		Ext. Tube - AX 20 (Gray Storage Clip) (Futura)
43453099		Ext. Tube - AX 20 (Black Storage Clip) (WindTunnel Canister)

3863801P		Extension Tube - Poly - AG