This Owner's Manual is provided and hosted by Appliance Factory Parts.

Appliance Factory Parts
Experts in BBQ, Humidifier, & Appliance Parts
1-800-955-7075

FRIEDRICH VHA09K50L-* Owner's Manual

Shop genuine replacement parts for FRIEDRICH VHA09K50L-*

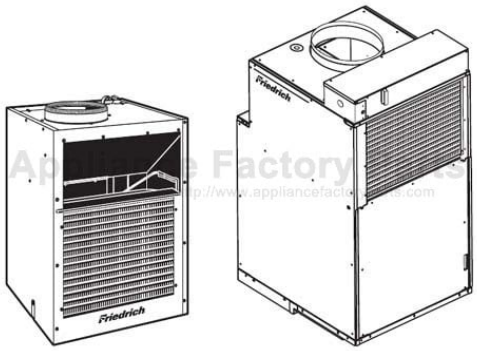

Find Your FRIEDRICH Air Conditioner Parts - Select From 1575 Models

-------- Manual continues below --------

FRIEDRICH

Parts Manual – R410A Models

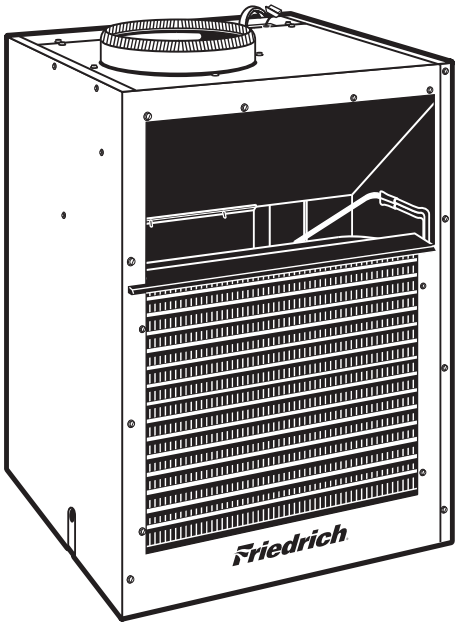

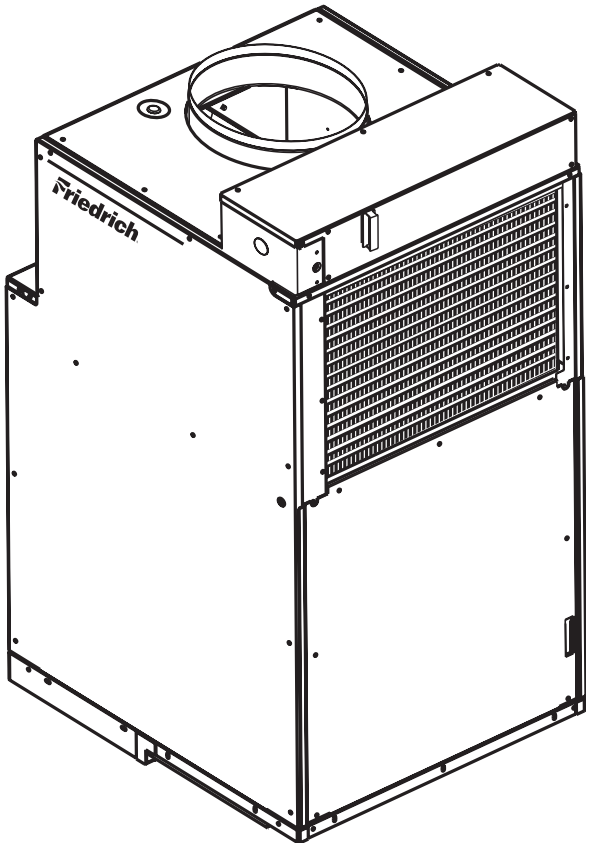

VERT-I-PAK® A Series (Electronic Controls)

Single Package Vertical Air Conditioning System

L Suffix Models

V(E, H)A09K25L-*	V(E, H)A09K34L-*	V(E, H)A09K50L-*
V(E, H)A12K25L-*	V(E, H)A12K34L-*	V(E, H)A12K50L-*
V(E, H)A18K25L-*	V(E, H)A18K34L-*	V(E, H)A18K25L-*
V(E, H)A24K25L-*	V(E, H)A24K34L-*	V(E, H)A24K50L-*
V(E, H)A24K75L-*	V(E, H)A24K10L-*	

VPAK-Parts (4-10)

*Last Digit May Vary

Table of Contents

Unit Identification 2

VPAK Diagrams for 9,000 - 18,000 BTU/h Models 3-5

VPAK Parts List for 9,000 - 18,000 BTU/h Models 6

VPAK Diagrams for 24,000 BTU/h Models 7-10

VPAK Parts List for 24,000 BTU/h Models 11

Model Identification Guide

MODEL NUMBER | V | E | A | 24 | K | 50 | RT | L

SERIES
V=Vertical Series

E=Cooling with or without electric heat
H=Heat Pump

DESIGN SERIES
A = 32" and 47" Cabinet

NOMINAL CAPACITY
A-Series (Btu/h)
09 = 9,000
12 = 12,000
18 = 18,000
24 = 24,000

VOLTAGE
K = 208/230V-1Ph-60Hz

ENGINEERING CODE

OPTIONS
RT = Standard Remote Operation

ELECTRIC HEATER SIZE
A-Series
00 = No electric heat
25 = 2.5 KW
34 = 3.4 KW
50 = 5.0 KW
75 = 7.5 KW
10 = 10 KW

VPAK Serial Number Identification Guide

SERIAL NUMBER | A | K | A | N | 00001

YEAR MANUFACTURED

LJ = 2009	AE = 2015
AK = 2010	AF = 2016
AA = 2011	AG = 2017
AB = 2012	AH = 2018
AC = 2013	AJ = 2019
AD = 2014	

PRODUCTION RUN NUMBER

PRODUCT LINE
N = VPAK

MONTH MANUFACTURED

A = Jan	D = Apr	G = Jul	K = Oct
B = Feb	E = May	H = Aug	L = Nov
C = Mar	F = Jun	J = Sep	M = Dec

9,000 - 18,000 BTU/h Models

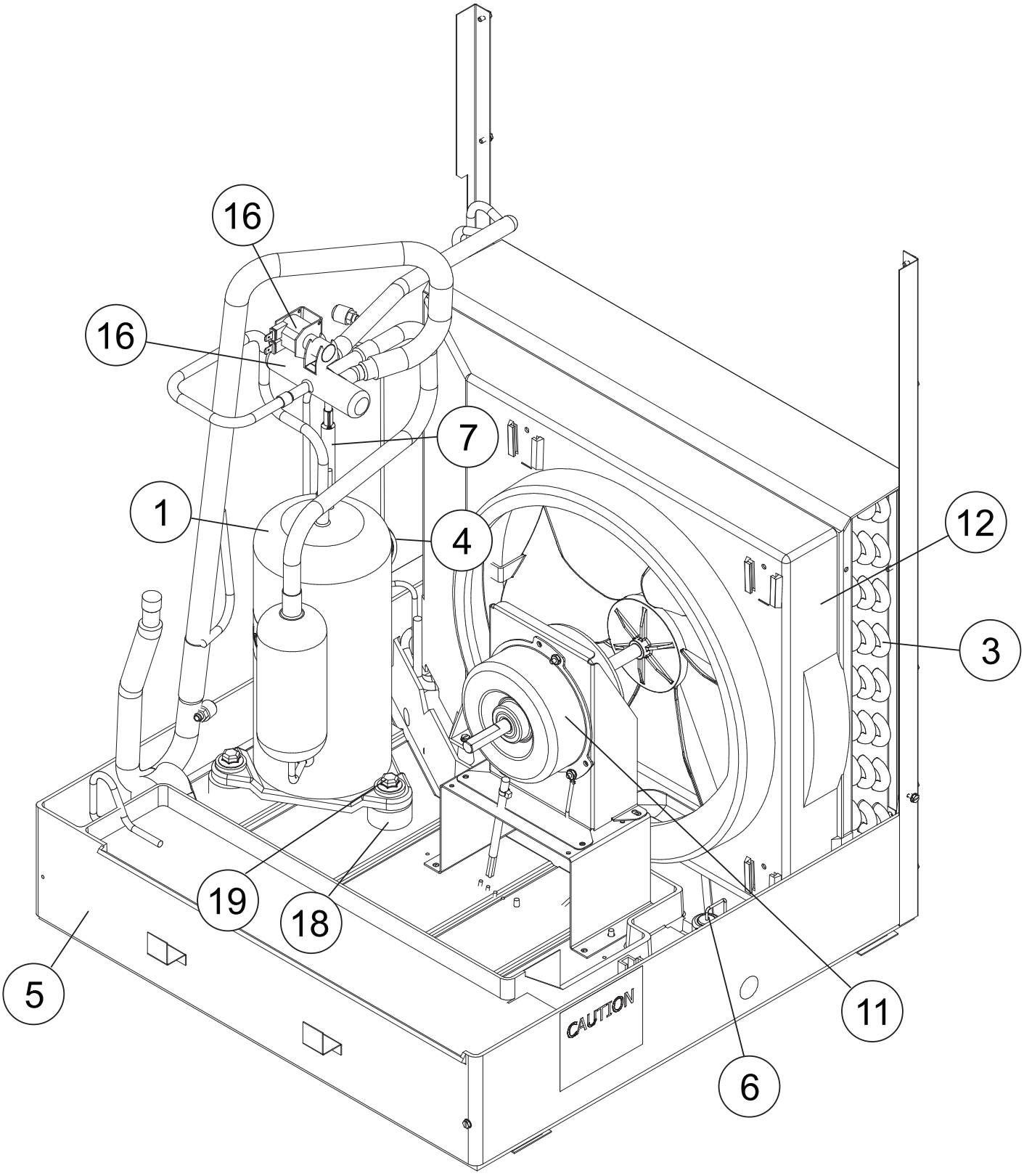

9,000 - 18,000 BTU/h Models

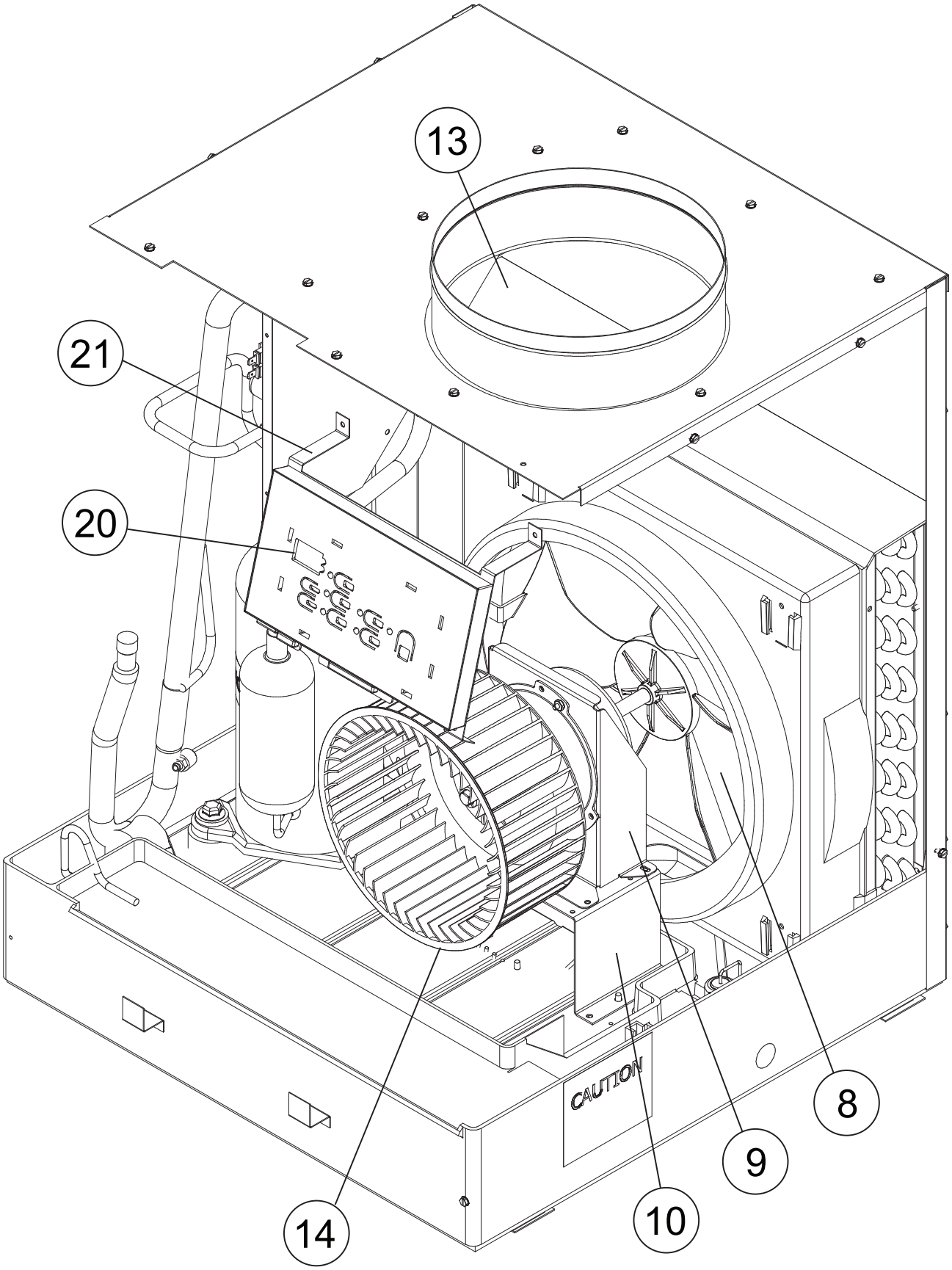

9,000 - 18,000 BTU/h Models

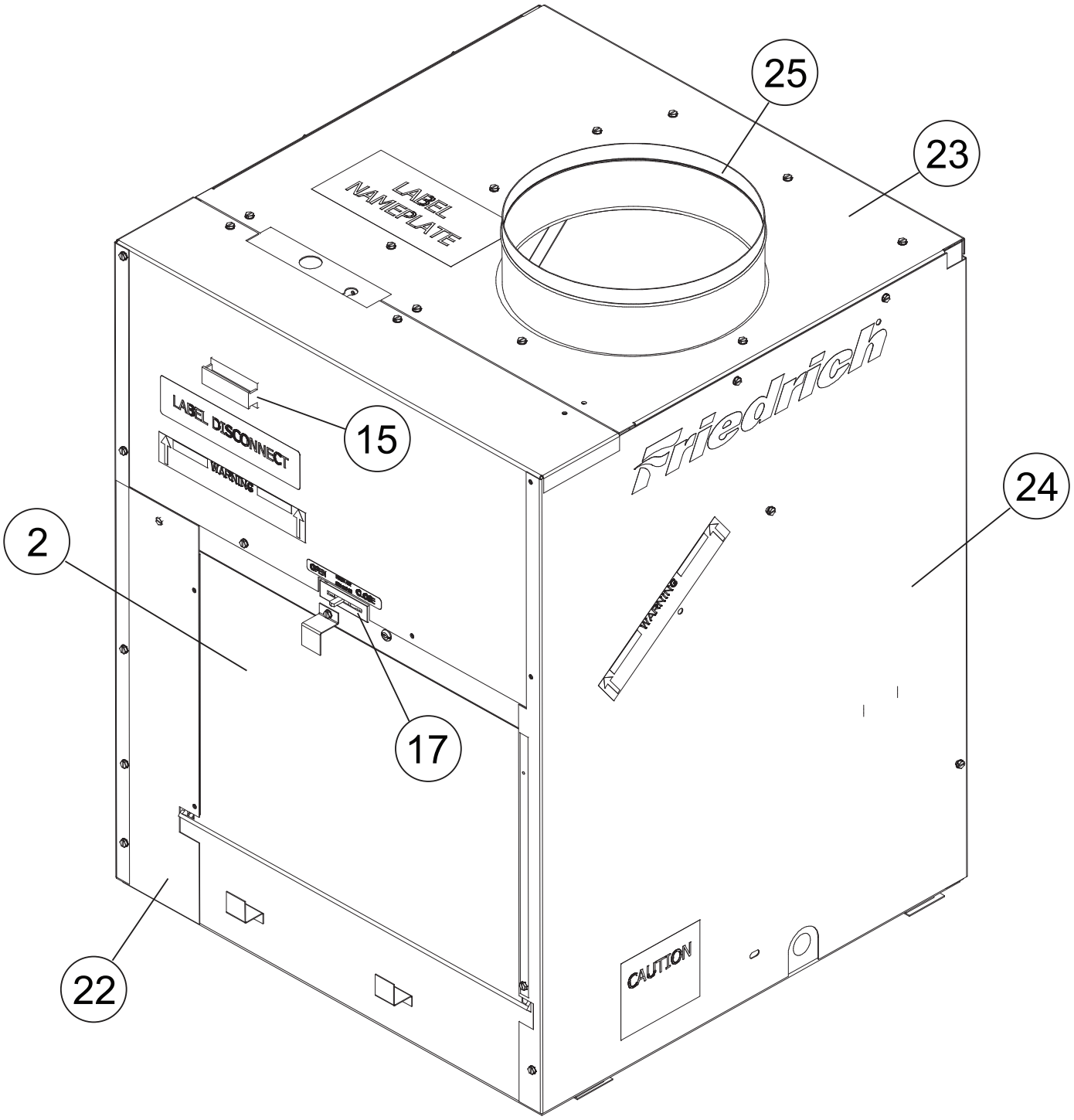

REF	PART NO.	DESCRIPTION	VEA09K25RTL-A	VEA09K34RTL-A	VEA09K50RTL-A	VEA12K25RTL-A	VEA12K34RTL-A	VEA12K50RTL-A	VEA18K25RTL-A	VEA18K34RTL-A	VEA18K50RTL-A	VHA09K25RTL-A	VHA09K34RTL-A	VHA09K50RTL-A	VHA12K25RTL-A	VHA12K34RTL-A	VHA12K50RTL-A	VHA18K25RTL-A	VHA18K34RTL-A	VHA18K50RTL-A	NOTES
1	80077146	COMPRESSOR KIT										1	1	1							
1	80074936	COMPRESSOR KIT	1	1	1																
1	80074937	COMPRESSOR KIT				1	1	1													
1	80074939	COMPRESSOR KIT													1	1	1				
1	80074938	COMPRESSOR KIT							1	1	1							1	1	1	
*	61764562	OVERLOAD										1	1	1							
*	61764573	OVERLOAD													1	1	1				
*	61764585	OVERLOAD				1	1	1													
*	61764588	OVERLOAD	1	1	1																
2	80041750	EVAPORATOR COIL	1	1	1	1	1	1				1	1	1							
2	80048150	EVAPORATOR COIL							1	1	1				1	1	1	1	1	1	
3	80041960	CONDENSER COIL	1	1	1																
3	80041970	CONDENSER COIL										1	1	1							
3	80041971	CONDENSER COIL				1	1	1							1	1	1	1	1	1	
3	80048050	CONDENSER COIL							1	1	1										
4	01389903	CAPILLARY TUBE (COOLING)	1	1	1							1	1	1							
4	01389915	CAPILLARY TUBE (COOLING)							1	1	1										
4	01389985	CAPILLARY TUBE (COOLING)																1	1	1	
4	01390000	CAPILLARY TUBE (HEATING)																1	1	1	
4	01390212	CAPILLARY TUBE (COOLING)													1	1	1				
4	03760473	CAPILLARY TUBE (COOLING)				1	1	1													
4	03760511	CAPILLARY TUBE (HEATING)													1	1	1				
4	03760513	CAPILLARY TUBE (HEATING)										1	1	1							
4	03760518	CAPILLARY TUBE (COOLING)										1	1	1							
5	80023702	BASEPAN VPAK							1	1	1				1	1	1	1	1	1	
5	80023703	BASEPAN VPAK	1	1	1	1	1	1				1	1	1							
6	60179903	CONDENSATE VALVE	1	1	1	1	1	1	1	1	1	1	1	1	1	1	1	1	1	1	
7	25076003	CHECK VALVE													1	1	1	1	1	1	
7	25076004	CHECK VALVE										1	1	1							
8	60542004	CONDENSER FAN BLADE	1	1	1	1	1	1	1	1	1	1	1	1	1	1	1	1	1	1	
9	61776900	MOTOR MOUNT	1	1	1	1	1	1	1	1	1	1	1	1	1	1	1	1	1	1	
10	80050200	MOTOR RISER	1	1	1	1	1	1	1	1	1	1	1	1	1	1	1	1	1	1	
11	80006801	FAN MOTOR	1	1	1	1	1	1	1	1	1	1	1	1	1	1	1	1	1	1	
12	61804901	CONDENSER SHROUD ASY	1	1	1	1	1	1	1	1	1	1	1	1	1	1	1	1	1	1	
13	80017090	HEATER 2.5KW 230V	1			1			1			1			1			1			
13	80017091	HEATER 3.4KW 230V		1			1			1			1			1			1		
13	80017092	HEATER 5.0KW 230V			1			1			1			1			1			1	
14	60610601	BLOWER WHEEL													1	1	1				
14	60610605	BLOWER WHEEL	1	1	1				1	1	1	1	1	1				1	1	1	
14	60610607	BLOWER WHEEL				1	1	1													
*	61080521	CAPACITOR 25/10 MF 450V				1	1	1				1	1	1							
*	61080554	CAPACITOR 40/10 MF 370V							1	1	1				1	1	1	1	1	1	
*	61080558	CAPACITOR 30/10 MF 370V	1	1	1																
15	80007600	NONFUSED DISCONNECT	1	1	1	1	1	1	1	1	1	1	1	1	1	1	1	1	1	1	
*	80010302	EVAPORATOR BLOWER HOUSING	1	1	1	1	1	1	1	1	1	1	1	1	1	1	1	1	1	1	
16	25022022	REVERSING VALVE + SOLENOID COIL										1	1	1	1	1	1				
16	25022032	REVERSING VALVE + SOLENOID COIL																1	1	1	
17	61656200	CHANNEL, EXHAUST DOOR	1	1	1	1	1	1	1	1	1	1	1	1	1	1	1	1	1	1	
*	61656201	SLIDE, EXHAUST DOOR	1	1	1	1	1	1	1	1	1	1	1	1	1	1	1	1	1	1	
18	61028900	COMPRESSOR GROMMET	3	3	3	3	3	3	3	3	3	3	3	3	3	3	3	3	3	3	
19	91400400	COMPRESSOR BOLT	3	3	3	3	3	3	3	3	3	3	3	3	3	3	3	3	3	3	
*	61883102	ISOLATION PAD	1	1	1	1	1	1	1	1	1	1	1	1	1	1	1				
*	80029207	ISOLATION PAD	2	2	2	2	2	2	2	2	2	2	2	2	2	2	2	2	2	2	
20	80062200	ELECTRONIC CONTROL PTAC	1	1	1	1	1	1	1	1	1	1	1	1	1	1	1	1	1	1	
21	80050600	BRACKET, ELECTRONIC CONTROL	1	1	1	1	1	1	1	1	1	1	1	1	1	1	1	1	1	1	
*	61834800	STRAINER .312 COIL	1	1	1	1	1	1				1	1	1	1	1	1				
*	61834801	STRAINER .375 COIL							1	1	1							1	1	1	
*	61834800	STRAINER .312 COIL										1	1	1				1	1	1	
*	61834801	STRAINER .375 COIL													1	1	1				
22	80049601	INSULATED LEFT FRONT PANEL ASY	1	1	1	1	1	1	1	1	1	1	1	1	1	1	1	1	1	1	
*	80013805	INSULATED LEFT SIDE PANEL ASY	1	1	1	1	1	1	1	1	1	1	1	1	1	1	1	1	1	1	
23	80013502	INSULATED TOP COVER ASY	1	1	1	1	1	1	1	1	1	1	1	1	1	1	1	1	1	1	
24	80013807	INSULATED RIGHT SIDE PANEL ASY	1	1	1	1	1	1	1	1	1	1	1	1	1	1	1	1	1	1	
25	80001800	COLLAR	1	1	1	1	1	1	1	1	1	1	1	1	1	1	1	1	1	1	
*	61828202	LIQUID LINE FILTER DRIER	1	1	1	1	1	1	1	1	1										
*	61828204	SUCTION LINE DRIER (HEAT PUMPS)										1	1	1	1	1	1	1	1	1	

24,000 BTU/h Models

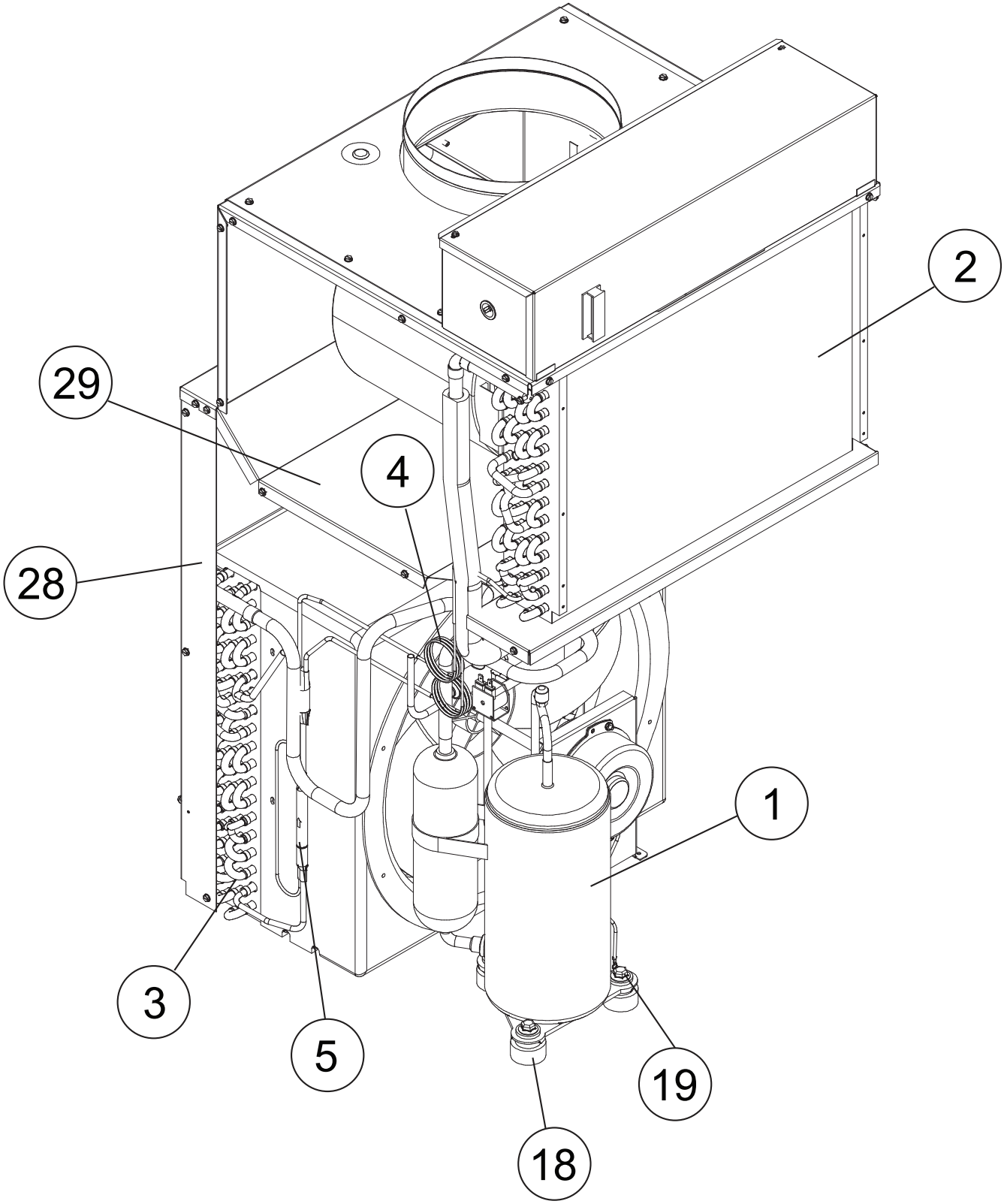

24,000 BTU/h Models

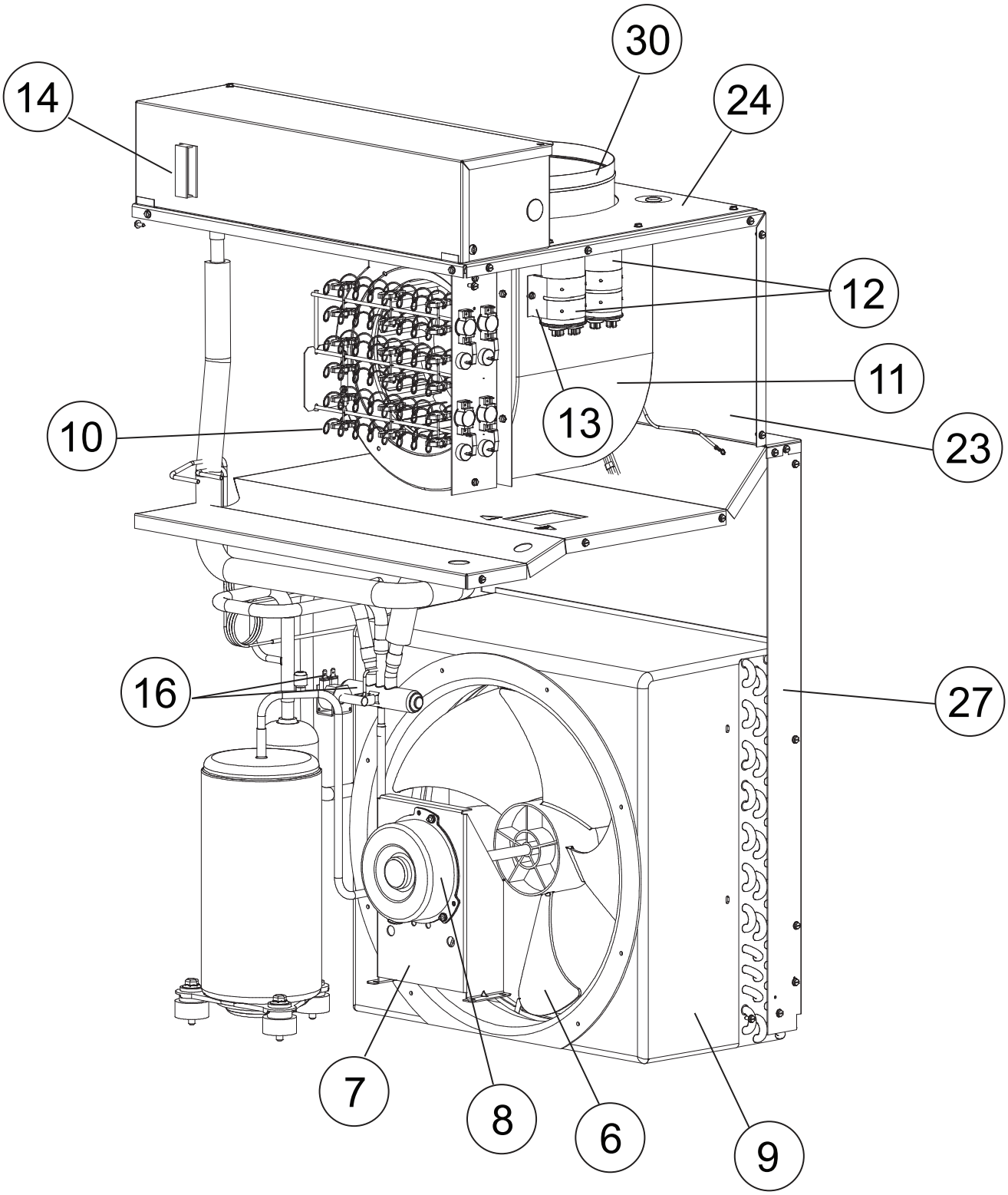

24,000 BTU/h Models

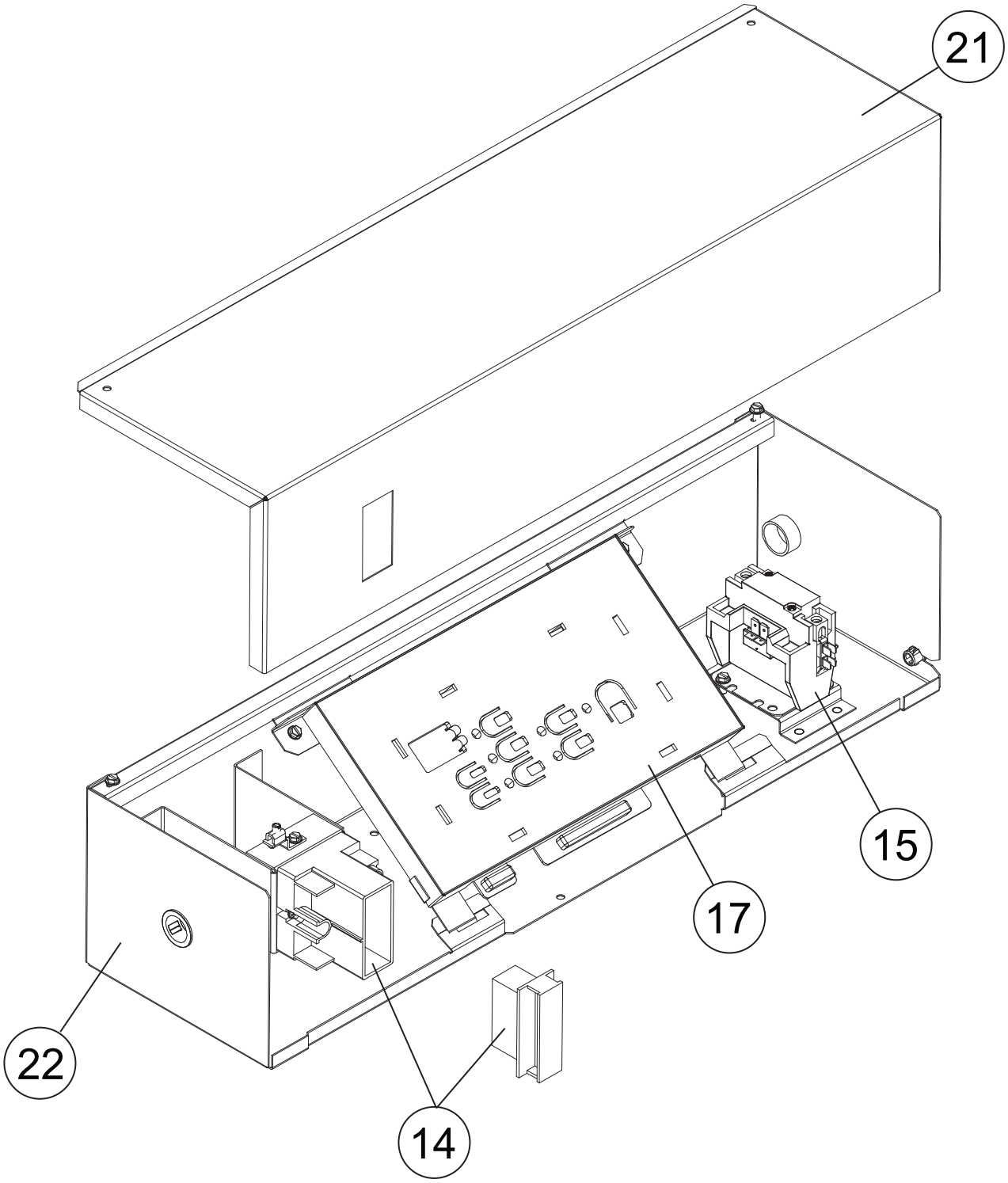

24,000 BTU/h Models

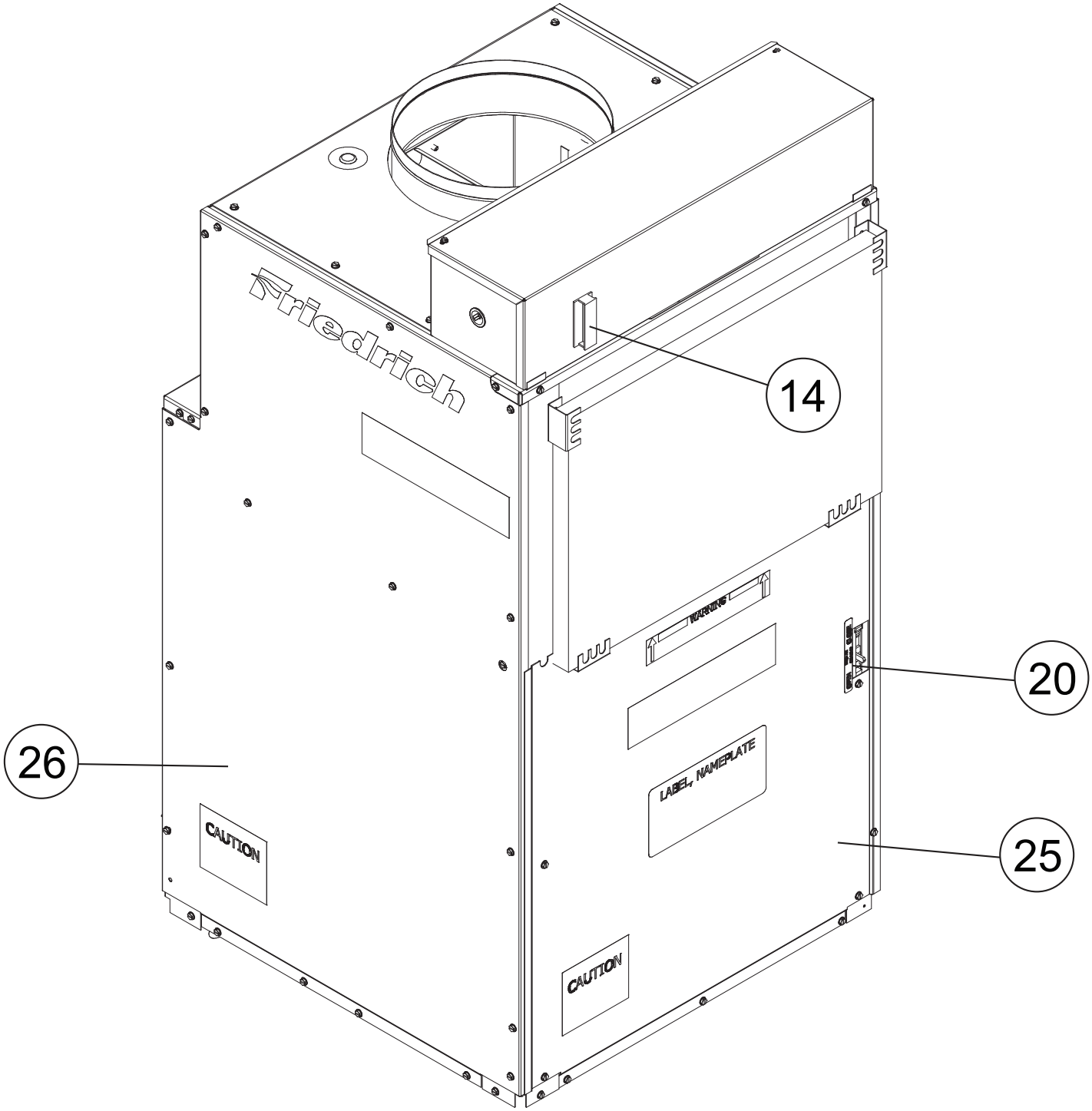

REF	PART NO.	DESCRIPTION	VEA24K25RTL-A	VEA24K34RTL-A	VEA24K50RTL-A	VEA24K75RTL-A	VEA24K10RTL-A	VHA24K25RTL-A	VHA24K34RTL-A	VHA24K50RTL-A	VHA24K75RTL-A	VHA24K10RTL-A	NOTES
1	80077118	COMPRESSOR KIT	1	1	1	1	1	1	1	1	1	1	
2	80103450	EVAPORATOR COIL	1	1	1	1	1	1	1	1	1	1	
3	80101260	CONDENSER COIL	1	1	1	1	1						
3	80101261	CONDENSER COIL						1	1	1	1	1	
4	03760507	CAPILLARY TUBE (HEATING)						1	1	1	1	1	
4	03760548	CAPILLARY TUBE (COOLING)	2	2	2	2	2	1	1	1	1	1	
*	80115225	BASEPAN ASSY	1	1	1	1	1	1	1	1	1	1	
*	80100300	DRAIN PAN	1	1	1	1	1	1	1	1	1	1	
*	60179903	CONDENSATE VALVE	1	1	1	1	1	1	1	1	1	1	
5	25076005	CHECK VALVE						1	1	1	1	1	
6	60542007	CONDENSER FAN BLADE	1	1	1	1	1	1	1	1	1	1	
7	25014400	MOTOR MOUNT	1	1	1	1	1	1	1	1	1	1	
8	80102100	FAN MOTOR (CONDENSER)	1	1	1	1	1	1	1	1	1	1	
*	80106900	BLOWER MOTOR	1	1	1	1	1	1	1	1	1	1	
*	80103600	BLOWER BRACKET	1	1	1	1	1	1	1	1	1	1	
9	80114100	CONDENSER SHROUD ASY	1	1	1	1	1	1	1	1	1	1	
10	80102290	HEATER 2.5KW 230V	1					1					
10	80102291	HEATER 3.4KW 230V		1					1				
10	80102292	HEATER 5.0KW 230V			1					1			
10	80102293	HEATER 7.5KW 230V				1					1		
10	80102294	HEATER 10.0KW 230V					1					1	
*	80102600	HEATER BRACKET	1	1	1	1	1	1	1	1	1	1	
*	80113300	HEATER SUPPORT	1	1	1	1	1	1	1	1	1	1	
11	80103200	BLOWER WHEEL & HOUSING (NOT SEPARATE)	1	1	1	1	1	1	1	1	1	1	
*	01336910	BLOWER SPACER	4	4	4	4	4	4	4	4	4	4	
12	61080543	CAPACITOR 15/5 MF 370V	1	1	1	1	1	1	1	1	1	1	
12	61080580	CAPACITOR 50/5/370VAC	1	1	1	1	1	1	1	1	1	1	
13	20709185	CAPACITOR BRACKET	1	1	1	1	1	1	1	1	1	1	
14	80007600	NONFUSED DISCONNECT	1	1	1	1	1	1	1	1	1	1	
15	80118600	CONTACTOR 240V	1	1	1	1	1	1	1	1	1	1	
16	25022032	REVERSING VALVE + SOLENOID COIL						1	1	1	1	1	
17	80062200	ELECTRONIC CONTROL KIT	1	1	1	1	1	1	1	1	1	1	
18	01150934	COMPRESSOR GROMMET	3	3	3	3	3	3	3	3	3	3	
19	91400400	COMPRESSOR BOLT	3	3	3	3	3	3	3	3	3	3	
*	61814801	CONNECTOR, FRESH AIR LRG	1	1	1	1	1	1	1	1	1	1	
20	61656200	CHANNEL, EXHAUST DOOR	1	1	1	1	1	1	1	1	1	1	
*	61656201	SLIDE, EXHAUST DOOR	1	1	1	1	1	1	1	1	1	1	
*	61883102	ISOLATION PAD	2	2	2	2	2	2	2	2	2	2	
*	61883102	ISOLATION PAD	1	1	1	1	1	1	1	1	1	1	
*	61834801	STRAINER .375 COIL						2	2	2	2	2	
*	61834800	STRAINER .312 COIL	1	1	1	1	1	1	1	1	1	1	
21	80103300	CONTROL BOX COVER	1	1	1	1	1	1	1	1	1	1	
22	80102000	CONTROL BOX	1	1	1	1	1	1	1	1	1	1	
23	80106701	INSUALTED TOP ASY	1	1	1	1	1	1	1	1	1	1	
24	80113200	TOP COVER	1	1	1	1	1	1	1	1	1	1	
25	80106600	BACK PANEL INSULATED	1	1	1	1	1	1	1	1	1	1	
26	80106400	RIGHT SIDE PANEL	1	1	1	1	1	1	1	1	1	1	
*	80106500	LEFT SIDE PANEL	1	1	1	1	1	1	1	1	1	1	
*	80101600	UPPER RIGHT POST	1	1	1	1	1	1	1	1	1	1	
*	80101500	UPPER LEFT POST	1	1	1	1	1	1	1	1	1	1	
27	80101300	LOWER LEFT POST	1	1	1	1	1	1	1	1	1	1	
28	80101400	LOWER RIGHT POST	1	1	1	1	1	1	1	1	1	1	
29	80106201	INNER WALL	1	1	1	1	1	1	1	1	1	1	
30	80001800	COLLAR	1	1	1	1	1	1	1	1	1	1	
*	61828203	LIQUID LINE FILTER DRIER	1	1	1	1	1						
*	61828204	SUCTION LINE DRIER (HEAT PUMPS)						1	1	1	1	1	

TECHNICAL SUPPORT CONTACT INFORMATION

FRIEDRICH

FRIEDRICH AIR CONDITIONING CO.
Post Office Box 1540 · San Antonio, Texas 78295-1540
4200 N. Pan Am Expressway · San Antonio, Texas 78218-5212
(210) 357-4400 · 1-800-541-6645 · FAX (210) 357-4490
www.friedrich.com

Printed in the U.S.A.