This Owner's Manual is provided and hosted by Appliance Factory Parts.

Appliance Factory Parts
Experts in BBQ, Humidifier, & Appliance Parts
1-800-955-7075

Peg-Perego IGCD0522 Owner's Manual

Shop genuine replacement parts for Peg-Perego IGCD0522

Find Your Peg-Perego Ride On Parts - Select From 224 Models

-------- Manual continues below --------

Peg-Pérego

FIUS0501G58

EN USE AND CARE

ES EMPLEO Y MANUTENCION

FR UTILISATION ET ENTRETIEN

JOHN DEERE
LICENSED PRODUCT

John Deere
FARM TRACTOR

Model Number IGCD0522

SEE VERBAL INSTRUCTION AFTER THE PICTURES

VER LAS INSTRUCCIONES DESPUÉS DE LOS DISEÑOS

VOIR LES INSTRUCTIONS APRÈS LES DESSINS

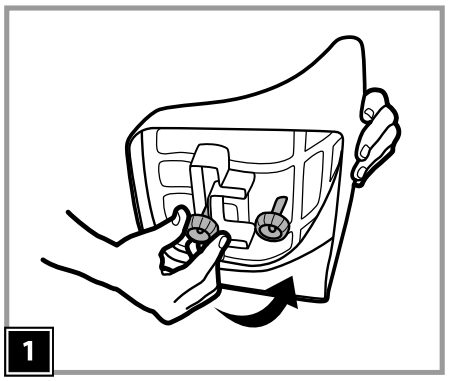

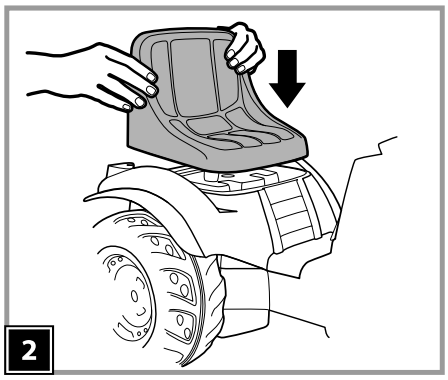

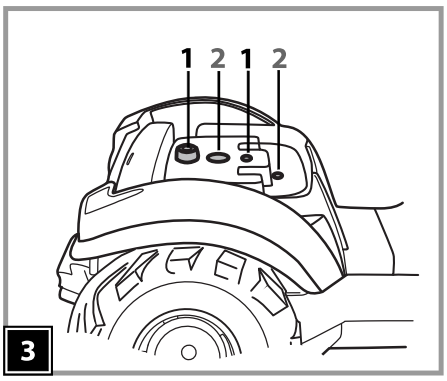

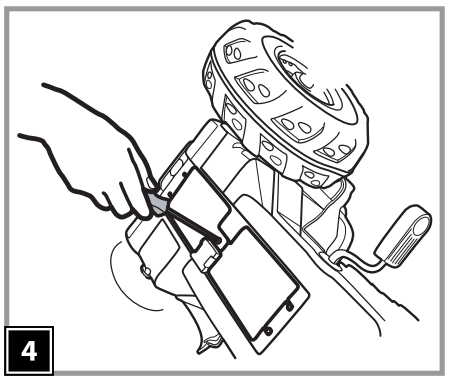

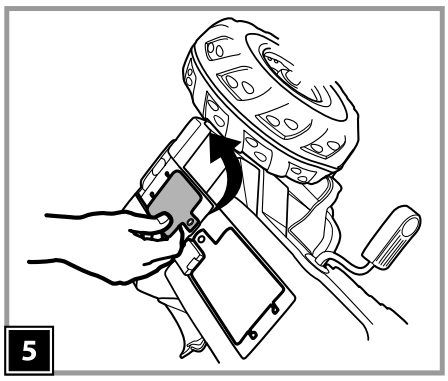

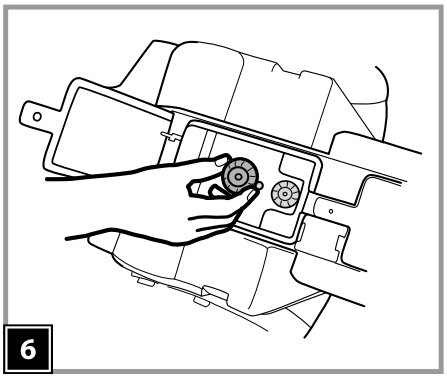

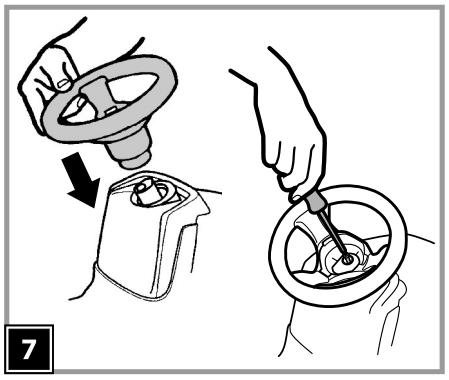

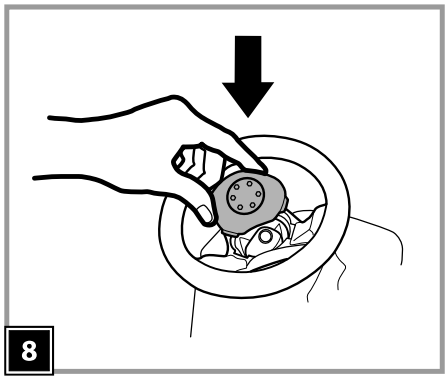

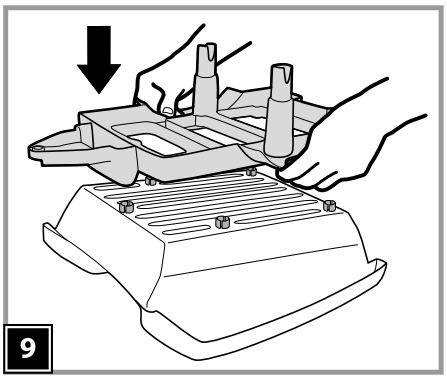

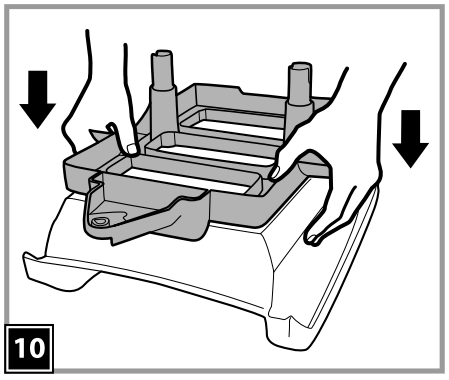

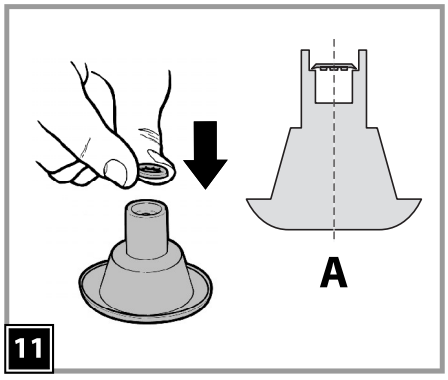

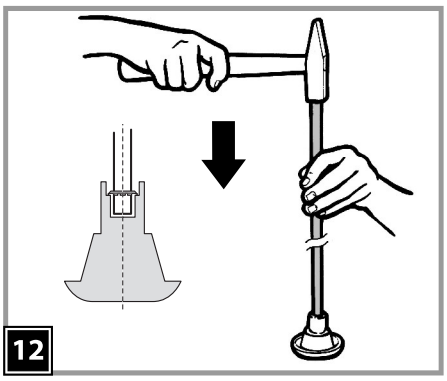

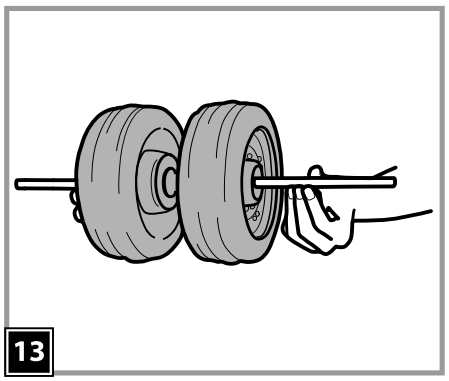

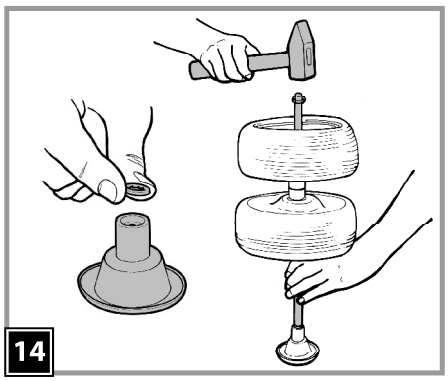

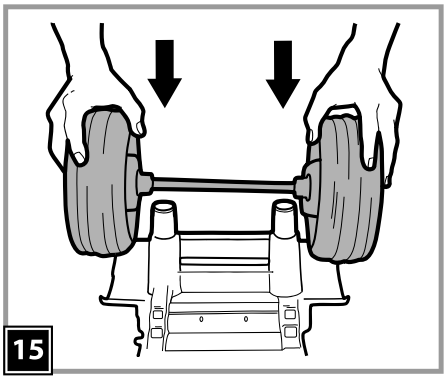
15

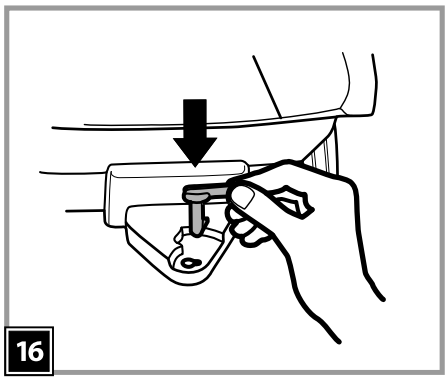
16

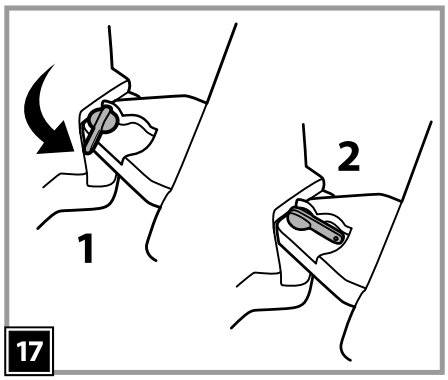
1
2
17

1	SAGI8340VBN
2	SOGI0036SC
3	SPST8354N
4dx	SARP8326DNY
4sx	SARP8326SNY
5	SPST8349
6	SPST8352N
7dx	SPST8339KDGR
7sx	SPST8339KSGR
8	SPST8332KNP
9	SPST8332JNP
10	SPST8342RF
11dx	SPST8341DN
11sx	SPST8341SN
12	SPST8344Y
13	SPST8345VB
14	SPST3814Y
15	SPST3813N
16	SOGI0035
17dx	SARP8325DNY
17sx	SARP8325SNY
18	SAGI8348N
19	SMCT0001
20	SPST8337A
21dx	ASGI0144DNA
21sx	ASGI0144SNA
22dx	SPST8335D
22sx	SPST8335S
23	SPST8334WN
24	SPST8330WN
25	SPST8338N
26	SPST8333WVB
27	ASGI0145NY
28	SPST8347N
29	SPST8249N
30	SAGI8343Y
31	SPST8207R
32	SPST8550N
33	SPST8331WN
34	SPST0397R
35	SPST8356N
36	SOFF0174L30
37	SARP8358NY
38	MMEV0145
39	SPST8357VB

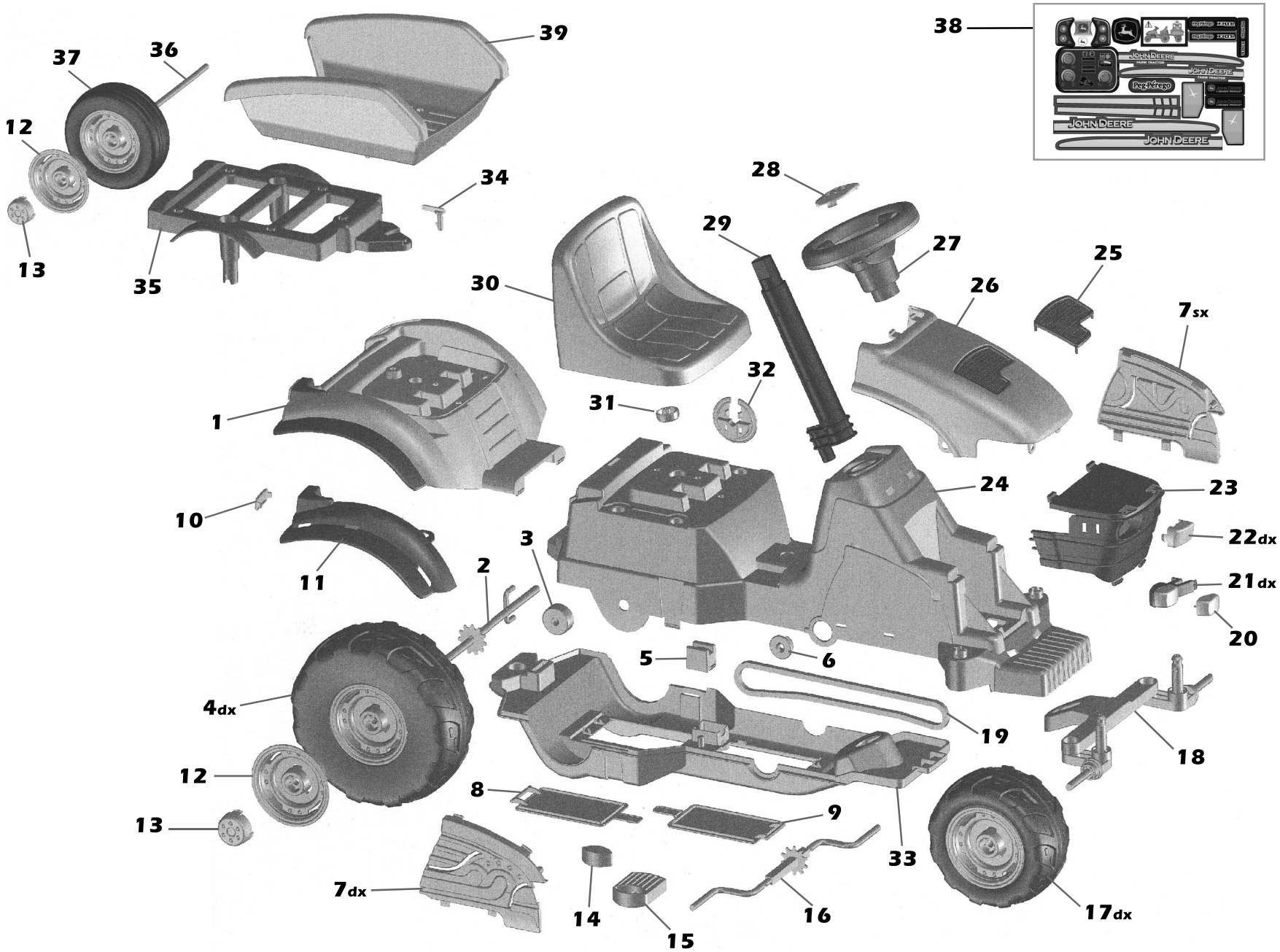

ENGLISH

• PEG PEREGO® thanks you for choosing this product. For over 50 years, PEG PEREGO has been taking children for an outing: first with its famous baby carriages and strollers, later with its pedal and battery operated toy vehicles.

• Read this instruction manual carefully to learn the use of the vehicle and to teach your child safe and enjoyable driving. Please keep this manual for use as a reference in the future.

• Our toys conform with the safety requirements provided by the Council of the EEC, of the T.Ü.V.; of the I.I.S.G. Istituto Italiano Sicurezza Giocattoli, and the U.S. Consumer Toy Safety Specification F963.

Peg Perego S.p.A. is an ISO 9001 certified company.
The fact that we are certified provides a guarantee of our honesty for our customers, and fosters trust in the company's way of working.

• Peg Perego reserves the right to modify or change its product. Price, literature, manufacturing processes or locations or any combination of the above mentioned entities may change at any time for any reason without notice with impunity.

Years 2-4
Weight capacity 50 lbs

CUSTOMER SERVICE

PEG PEREGO offers after-sales services, directly or through a network of authorized service centers for repairs or replacement parts. See the back cover of this instruction manual for contact information.

ASSEMBLY INSTRUCTIONS

⚠ CAUTION:

ADULT ASSEMBLY REQUIRED.
USE CARE WHEN UNPACKING AS COMPONENTS TO BE ASSEMBLED MAY POSE A SMALL PARTS/SHARP EDGE HAZARD.

ASSEMBLY

1 • Unscrew the 2 knobs under the seat.
2 • Position the seat as shown in the figure.
3 • IMPORTANT: the seat can be adjusted to 2 positions depending on the height of the child (see figure). Position 1: the seat is higher and further back. Position 2: the seat is lower and further forward.
4 • Turn the vehicle on its side, keeping the seat in position. Unscrew the chain cover under the vehicle.
5 • Open the cover to access the seat fixing screws.
6 • Screw on the two seat fixing knobs as shown in the figure. Close and screw on the cover.
7 • Position the steering wheel. Fix the steering wheel with the screw and washer provided.
8 • Push on the steering wheel cap as shown in the figure.

TRAILER

9 • Position the trailer base on the bucket, oriented as shown.
10 • Snap on the 5 pegs, ensuring they are fully inserted.
11 • Insert a self-locking washer into the conical tool provided. IMPORTANT: the washer flanges must be orientated towards the inside of the tool (see detail A).
12 • Remove the axle from the packaging and remove the protective caps, if present. Insert the axle, hitting it with a hammer until fully inserted into the tool. When finished remove the tool.
13 • Slide the 2 wheels onto the axle. IMPORTANT: check that the wheels are correctly inserted, with the hub caps facing out.
14 • Put a self-locking washer into the tool (figure 35), insert the axle prepared previously, and hammer in fully.
15 • Separate the wheels and fit them by pressing the wheel group down onto the base of the trailer.
16 • Insert the red coupling into the hole on the trailer (see figure).
17 • Couple the trailer onto the back of the tractor, rotating the red lever. Figure 1: the trailer can be uncoupled; figure 2: the trailer coupled. WARNING: The trailer will hold a load weighing up to 5 kg.

VEHICLE MAINTENANCE AND SAFETY

This product conforms to EN 71 the safety standard for toys.
This vehicle is not intended for use on streets, around traffic or parked cars.
This product meets and/or exceeds all ASTM TOY SAFETY STANDARDS, including F 963, Consumer Toy Safety Specifications.

MAINTENANCE AND CARE

• Regularly check the conditions of the vehicle. In case of fault, do not try to use the vehicle. For repair use only original PEG PEREGO's spare parts.
• PEG PEREGO assumes no liability if the product as been tampered with.
• Do not leave vehicle near sources of heat such as radiators, stoves, fireplaces, etc.
• Protect vehicle from water, rain, snow, etc.
• Periodically lubricate (with a light weight oil) moving parts, such as wheel bearings, steering linkages, and chains at points of rotation or where they come in contact.
• The vehicle's surface can be cleaned with a dampcloth. Do not use abrasive cleaners. The cleaning must be carried out by adults only.
• Never disassemble the vehicles mechanisms unless authorized by PEG PEREGO.

SAFETY

⚠ WARNING!

THE CAR MUST BE USED UNDER ADULT SUPERVISION.

• Not suitable for children under the age of 2 years. The small pieces could be swallowed or inhaled.
• Never use the vehicle on steep slopes, near steps or stairs, in the middle of traffic or between parked cars.
• Children should always wear shoes when riding in or driving a ride-in/ride-on vehicle.
• Do not allow children to place their hands, feet or any part of their body, clothing or other articles near the moving parts while vehicle is in operation.
• Never use gasoline or other flammable substances near the vehicle.
• The vehicle is constructed just for one child.

This document was created with Win2PDF available at http://www.win2pdf.com.
The unregistered version of Win2PDF is for evaluation or non-commercial use only.
This page will not be added after purchasing Win2PDF.