This Owner's Manual is provided and hosted by Appliance Factory Parts.

Appliance Factory Parts
Experts in BBQ, Humidifier, & Appliance Parts
1-800-955-7075

FRIEDRICH KM24L30-C Owner's Manual

Shop genuine replacement parts for FRIEDRICH KM24L30-C

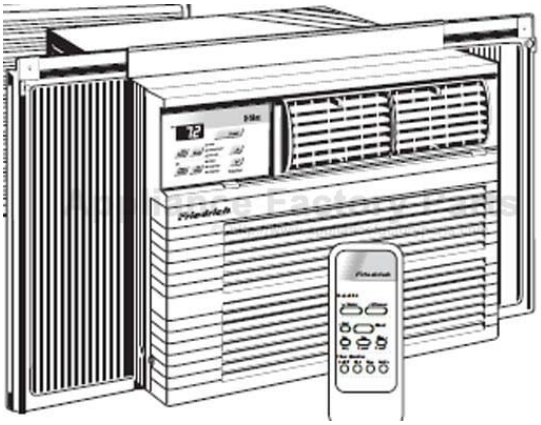

Find Your FRIEDRICH Air Conditioner Parts - Select From 1575 Models

-------- Manual continues below --------

Friedrich

2008 Parts Manual

Room Air Conditioners

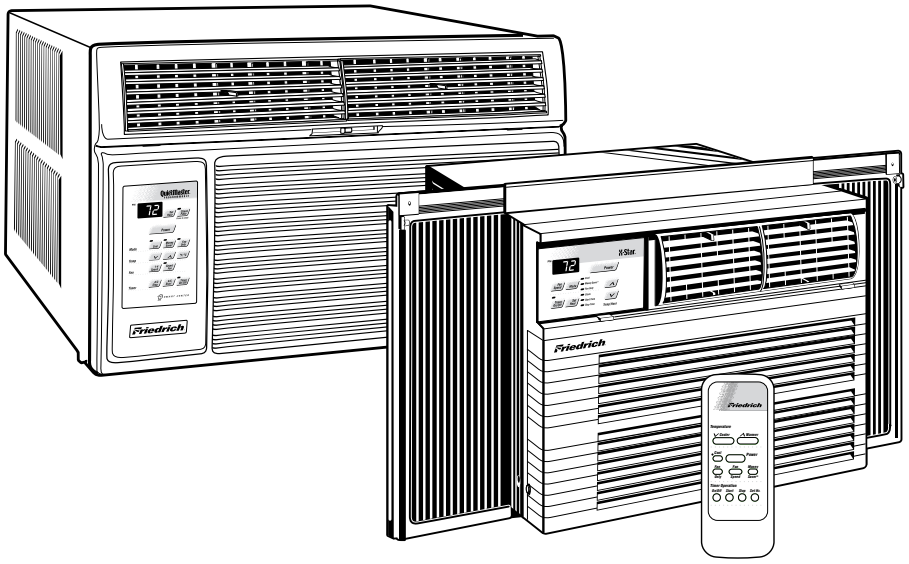

920-132-03 (6-08)

TABLE OF CONTENTS

PORTABLE "Q" SERIES UNITS 4-7

SMALL CHASSIS "S" SERIES UNITS (115 & 230 VOLT) 8-15

MEDIUM CHASSIS "M" SERIES UNITS (115 & 230 VOLT).....16-19

LARGE CHASSIS "L" SERIES UNITS 20-23

CABINET PARTS

NOTE: Item #2 is used on "EQ" model only.
Item #3 is used on "XQ" model only

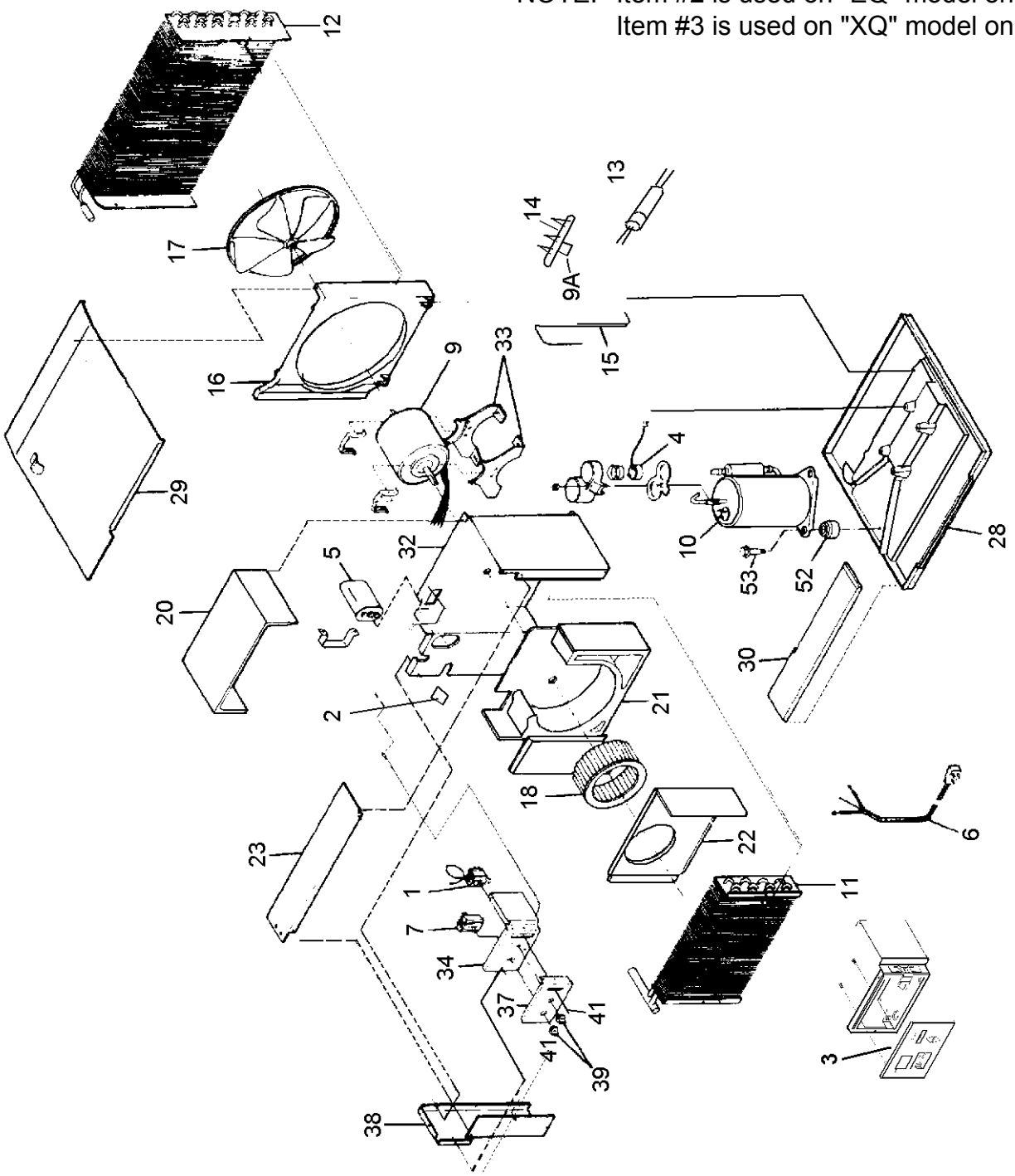

CABINET PARTS

NOTE: Items 51, 56 and 57 are not included with the "EQ" unit.

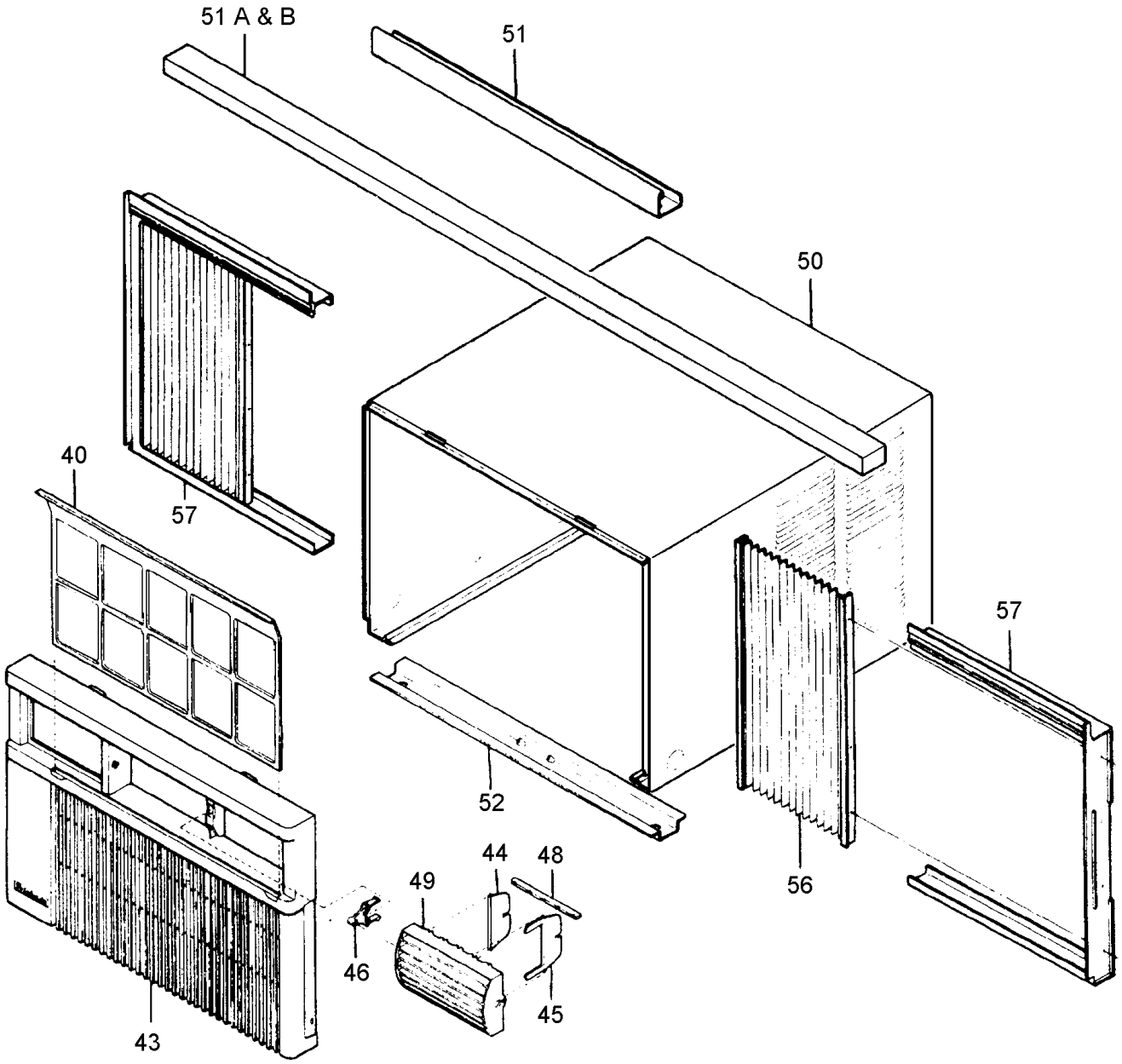

PORTABLE "Q" SERIES

REF	DESCRIPTION	PART NO.	XQ						EQ	CODE
	ELECTRICAL PARTS		XQ05L10A-C	XQ06L10A-C	XQ08L10A-B	XQ10L10A-C	XQ12L10A-B	XQ12L10A-C	EQ08L11A-B	
1	THERMOSTAT	61822401							1	120
3	ELECTRONIC BOARD	61921192	1	1	1	1	1	1		340
*	REMOTE CONTROL	61826606	1	1	1	1	1	1		350
*	RESISTOR	61900500							1	200
4	OVERLOAD	61764528					1	1		190
4	OVERLOAD	61764539	1	1						190
4	OVERLOAD	61764519				1				190
4	OVERLOAD	61764507			1				1	190
5	CAPACITOR	61080570					1	1		150
5	CAPACITOR	61080550	1	1	1				1	150
5	CAPACITOR	61080528				1				150
6	SUPPLY CORD	60500330	1	1	1	1	1	1	1	220
7	SWITCH ROTARY 6 POS	60441610							1	130
*	HEATER	61929611							1	193
9	FAN MOTOR	61871468					1	1		110
9	FAN MOTOR	61871451	1	1	1	1			1	110
REF	DESCRIPTION	PART NO.	XQ						EQ	CODE
	REFRIGERATION PARTS		XQ05L10A-C	XQ06L10A-C	XQ08L10A-B	XQ10L10A-C	XQ12L10A-B	XQ12L10A-C	EQ08L11A-B	
10	COMPRESSOR	61562832			1				1	600
10	COMPRESSOR	61716671				1				600
10	COMPRESSOR	61985100		1						600
10	COMPRESSOR	61985101	1							600
10	COMPRESSOR	61716670					1	1		600
11	EVAPORATOR COIL	61600257		1						400
11	EVAPORATOR COIL	61600258	1		1				1	400
11	EVAPORATOR COIL	62050018				1				400
11	EVAPORATOR COIL	62050020					1			400
11	EVAPORATOR COIL	62050024						1		400
12	CONDENSER COIL	61600519	1	1	1				1	410
12	CONDENSER COIL	62050319				1				410
12	CONDENSER COIL	62103404					1			410
12	CONDENSER COIL	62103407						1		410
*	DRIER, LIQUID	61481300	1	1	1	1	1	1	1	480
15	CAPILLARY TUBE	03760545	1	1						471
15	CAPILLARY TUBE	03760513			1				1	471
15	CAPILLARY TUBE	61992900				1				471
15	CAPILLARY TUBE	61992901					1	1		471

*** PARTS NOT SHOWN**

PORTABLE "Q" SERIES

REF	DESCRIPTION	PART NO.	XQ						EQ	CODE
	CHASSIS PARTS		XQ05L10A-C	XQ06L10A-C	XQ08L10A-B	XQ10L10A-C	XQ12L10A-B	XQ12L10A-C	EQ08L11A-B	
16	SHROUD, CONDENSER	61627601	1	1	1	1	1	1	1	720
17	FAN BLADE	61634000					1	1		710
17	FAN BLADE	61634001	1	1	1	1			1	710
18	BLOWER WHEEL	60610604					1	1		700
18	BLOWER WHEEL	60610606	1	1						700
18	BLOWER WHEEL	60610612			1	1			1	700
20	COVER BLOWER	61619513	1	1	1	1			1	745
20	COVER BLOWER	61619517					1	1		745
21	WRAPPER, SCROLL,	61990606	1	1	1	1	1	1	1	741
22	FRONT, BLOWER	61928801							1	742
22	FRONT, BLOWER	61990700	1	1	1	1	1	1		742
23	DECK, BLOWER	61619405							1	745
23	DECK, BLOWER	61990500	1	1	1	1	1	1		745
28	BASE PAN	61626312	1	1	1					730
28	BASE PAN	61626313				1	1	1		730
28	BASE PAN	61626314							1	730
29	COVER, UNIT TOP	61619513	1	1	1	1			1	746
30	DRAIN PAN, EVAP.	61638400	1	1	1	1	1	1	1	840
32	INNER WALL	61597317	1	1	1	1	1	1		777
32	INNER WALL	61597318							1	777
33	FAN MOTOR MOUNT	61776900					1	1		900
33	FAN MOTOR MOUNT	61776903	1	1	1	1			1	900
*	SCREW, FAN MTR. MT.	21004672	4	4	4	4	4	4	4	999
34	CONTROL MT. BRACKET	61619612							1	763
34	CONTROL MT. BRACKET	61923901	1	1	1	1	1	1		763
37	CONTROL DEC. PANEL	61715921							1	760
38	PANEL ASSLY, L\S	61924300	1	1	1	1	1	1	1	765
39	CONTROL KNOBS	61911605							2	761
*	HOLDER, TSTAT BULB	61900500							1	764
*	HOLDER, THERMISTER	61925001	1	1	1	1	1	1		764
40	FILTER, AIR	61632315	1	1	1	1	1	1	1	754
43	FRONT, DECORATIVE	61637716	1	1	1	1	1	1	1	750
50	SHELL, OUTER ASSY	61623001	1	1	1	1	1	1	1	720
51	ANGLE, TOP SUPPORT	61627313	1	1	1	1	1	1		999
52	CHANNEL, SILL	61627211	1	1	1	1	1	1	1	999
*	SCRIPT, FRIEDRICH	60169110	1	1	1	1	1	1	1	999
51A	GASKET, CHASSIS SEAL	61717300	1	1	1	1	1	1	1	780
51B	GASKET, WINDOW SEAL	60073300	1	1	1	1	1	1		780
*	BAG ASSLY (SCREWS)	61778700	1	1	1	1	1	1		999
*	BAG ASSLY (SCREWS)	61778701							1	999
*	COUNTER WEIGHT	61715800	3	3	3	2	2	2	3	999
*	SEAL, FAN MOTOR	60217902	1	1	1	1	1	1	1	780
54	GROMMET, COMP. MT.	61028900	3	3	3	3	3	3	3	790
53	SCREW, COMP. MT.	91400400	3	3	3	3	3	3	3	999
56	CURTAIN ASSLY.	61680205	1	1	1	1	1	1		999
*	CARTON, SHIPPING	61841925	1	1	1	1	1	1	1	999
*	PAD SHIPPING TOP	61769700	1	1	1	1	1	1	1	999
*	PAD SHIPPING BOTTOM	61716401	1	1	1	1	1	1	1	999
	OPTIONAL ACCESSORIES									
*	WINDOW KIT	WIKQ							1	
*	ANTI-ICE KIT	61680600							1	
*	START ASSIST (PTCR)	61008903	1	1	1	1	1	1	1	
*	DRAIN KIT, DC-2	01900235	1	1	1	1	1	1	1	

*** PARTS NOT SHOWN**

CHASSIS PARTS (ES, SS & YS)

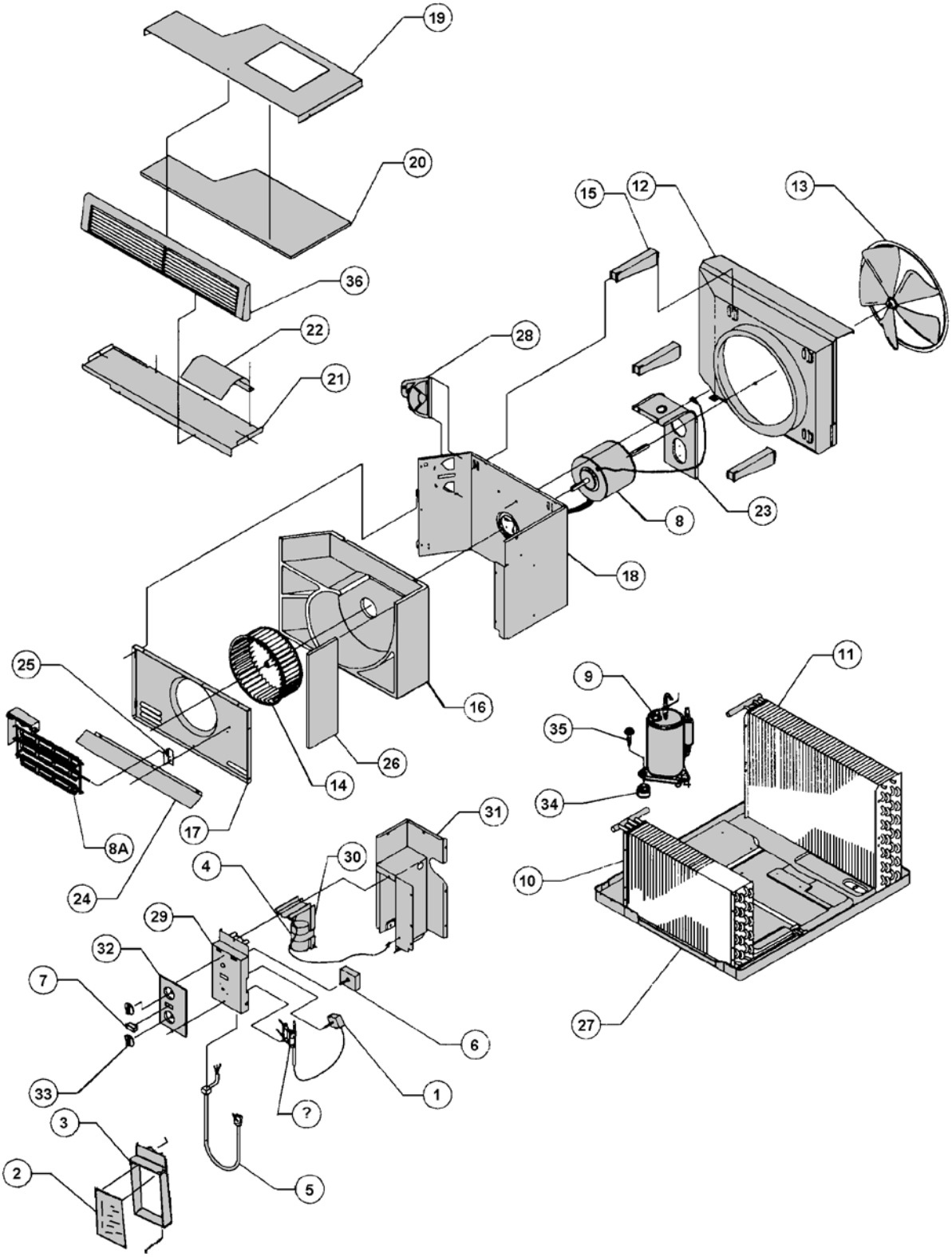

CHASSIS PARTS (ES, SS & YS)

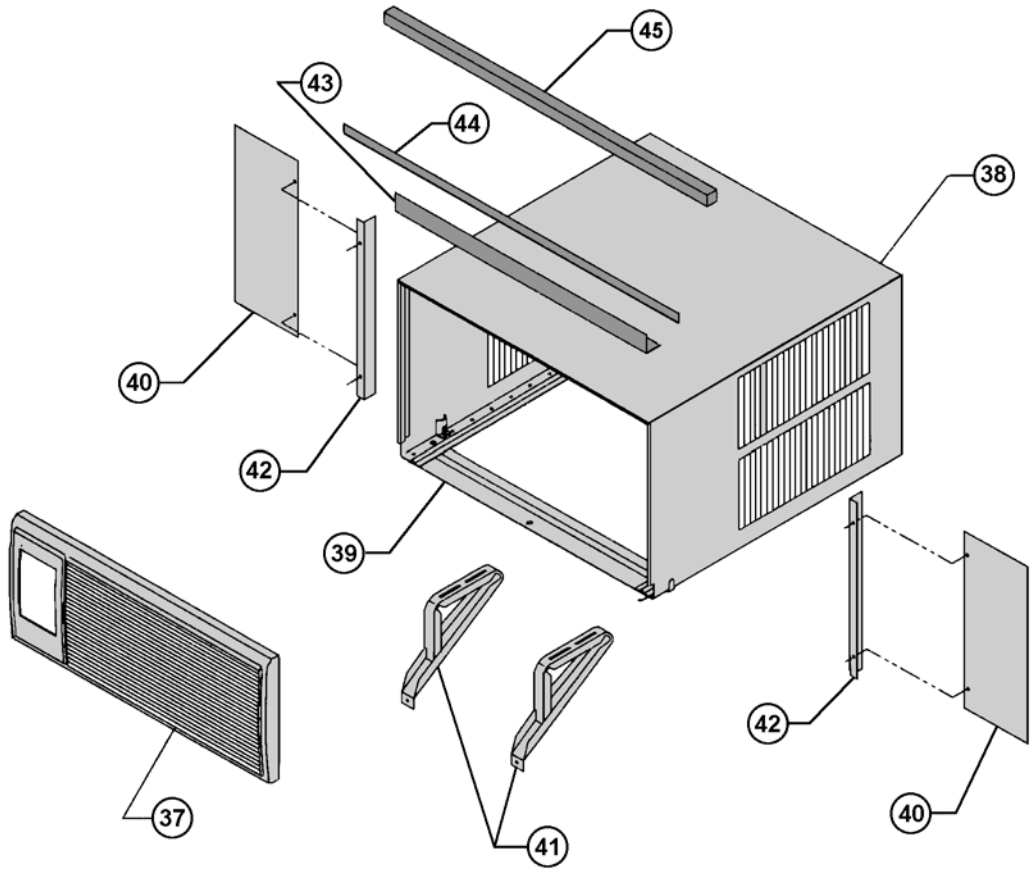

SMALL CHASSIS "S" SERIES - 115V

REF	DESCRIPTION	PART NO.	KS				SS								YS		CODE
	ELECTRICAL PARTS		KS12L10-E	KS12L10-F	KS15L10-C	KS15L10-D	SS08L10-E	SS08L10-F	SS10L10-D	SS10L10-E	SS12L10-E	SS12L10-F	SS14L10-D	SS14L10-E	YS09L10-F	YS09L10-G	
1	THERMOSTAT	61828500	1	1	1	1											120
1	THERMOSTAT	61828400													1	1	120
*	THERMOSTAT, DEFROST	61350314													1	1	122
2	ELECTRONIC CTRL.	61921193					1	1	1	1	1	1	1	1			331
*	REMOTE CONTROL	61826606					1	1	1	1	1	1	1	1			350
3	RESISTOR	61808000	1	1	1	1									1	1	200
*	OVERLOAD	61764519	1	1					1	1	1	1			1	1	190
*	OVERLOAD	61764544			1	1							1	1			190
*	OVERLOAD	61764507					1	1									190
4	CAPACITOR	61080535					1	1							1	1	150
4	CAPACITOR	61080554							1	1							150
4	CAPACITOR	61080569	1	1	1	1					1	1	1	1			150
5	SUPPLY CORD	60500321	1	1	1	1	1	1	1	1	1	1	1	1	1	1	220
6	SWITCH SYS. 6 POS.	60607205	1	1	1	1											130
6	SWITCH SYS. 8 POS.	60607204													1	1	130
7	SWITCH (YES - NO)	61806105	1	1	1	1									1	1	132
8	FAN MOTOR	61871444	1	1	1	1	1	1	1	1	1	1	1	1	1	1	110
*	SOLENOID COIL	25063505													1	1	240
REF	DESCRIPTION	PART NO.	KS				SS								YS		CODE
	REFRIGERATION PARTS		KS12L10-E	KS12L10-F	KS15L10-C	KS15L10-D	SS08L10-E	SS08L10-F	SS10L10-D	SS10L10-E	SS12L10-E	SS12L10-F	SS14L10-D	SS14L10-E	YS09L10-F	YS09L10-G	
9	COMPRESSOR	61716641							1	1							600
9	COMPRESSOR	61716671	1	1							1	1					600
9	COMPRESSOR	61716653			1	1							1	1			600
9	COMPRESSOR	61562832					1	1									600
9	COMPRESSOR	61716665													1	1	600
10	EVAPORATOR COIL	61850100	1						1						1		400
10	EVAPORATOR COIL	61850114					1										400
10	EVAPORATOR COIL	61850117		1						1						1	400
10	EVAPORATOR COIL	61850118						1									400
10	EVAPORATOR COIL	62050006				1						1		1			400
10	EVAPORATOR COIL	62050022			1						1		1				400
11	CONDENSER COIL	61850303			1												410
11	CONDENSER COIL	61850217	1														410
11	CONDENSER COIL	62050317					1				1						410
11	CONDENSER COIL	62050318		1				1				1					410
11	CONDENSER COIL	62050303							1				1		1		410
11	CONDENSER COIL	62050304				1				1				1		1	410
*	DRIER, LIQUID	60308101	1	1	1	1	1	1	1	1	1	1	1	1			480
*	DRIER, SUCTION	61828200													1	1	480
*	CHECK VALVE	61824404													1	1	510
*	REVERSING VALVE	25018305													1	1	500
*	CAPILLARY TUBE	03760518					1	1									471
*	CAPILLARY TUBE	03760520							1	1							471
*	CAPILLARY TUBE	03760473	1	1							1	1					471
*	CAPILLARY TUBE (HEAT)	03760479													1	1	471
*	CAPILLARY TUBE	03760501			1	1							1	1			471
*	CAPILLARY TUBE (COOL)	03760555													1	1	471

*** PARTS NOT SHOWN**

SMALL CHASSIS "S" SERIES - 115V

REF	DESCRIPTION	PART NO.	KS				SS								YS		CODE
	CHASSIS PARTS		KS12L10-E	KS12L10-F	KS15L10-C	KS15L10-D	SS08L10-E	SS08L10-F	SS10L10-D	SS10L10-E	SS12L10-E	SS12L10-F	SS14L10-D	SS14L10-E	YS09L10-F	YS09L10-G	
12	SHROUD, SML W/SUMP LOOP	61803601	1	1	1	1	1	1	1	1	1	1	1	1	1	1	720
13	FAN BLADE, CONDENSER	60542003	1	1	1	1	1	1	1	1	1	1	1	1	1	1	710
14	BLOWER WHEEL, EVAPORATOR	60610603	1	1	1	1					1	1			1	1	700
14	BLOWER WHEEL, EVAPORATOR	60610604					1	1	1	1			1	1			700
15	BRACE, COND. SHROUD	61802600	3	3	3	3	3	3	3	3	3	3	3	3	3	3	722
16	SCROLL	61814905	1	1	1	1	1	1	1	1	1	1	1	1	1	1	743
17	BLOWER FRONT	61817300	1	1	1	1	1	1	1	1	1	1	1	1	1	1	742
*	INSULATION, INNER WALL	61816900	1	1	1	1	1	1	1	1	1	1	1	1	1	1	781
18	INNER WALL	61907300	1	1	1	1	1	1	1	1	1	1	1	1	1	1	777
19	COVER, TOP	61906700	1	1	1	1	1	1	1	1	1	1	1	1	1	1	746
20	INSULATION, TOP COVER	61816701	1	1	1	1	1	1	1	1	1	1	1	1	1	1	781
21	DECK	61817100	1	1	1	1	1	1	1	1	1	1	1	1	1	1	745
22	AIR FOIL	61820200	1	1	1	1	1	1	1	1	1	1	1	1	1	1	744
23	MOUNT, FAN MOTOR	61802500	1	1	1	1	1	1	1	1	1	1	1	1	1	1	900
27	BASE PAN	61803439					1	1									730
27	BASE PAN	61803441	1	1	1	1			1	1	1	1	1	1			730
27	BASE PAN	61809013													1	1	730
*	DRAIN PAN	61803800	1	1	1	1	1	1	1	1	1	1	1	1	1	1	840
*	BELLOWS, DRAIN VALVE	60179903													1	1	801
*	GRILLE, REAR	61818500	1	1	1	1	1	1	1	1	1	1	1	1	1	1	771
28	DOOR, SLIDE ASSLY.	61821500	1	1	1	1	1	1	1	1	1	1	1	1	1	1	810
*	CONNECTOR, SLIDE DOOR	61814800	1	1	1	1	1	1	1	1	1	1	1	1	1	1	811
29	PANEL, CTRL. MT.	61807250	1	1	1	1									1	1	999
29	PANEL, CTRL. MT.	61807251					1	1	1	1	1	1	1	1			999
30	BRACKET, CAP. MT	61820400	1	1	1	1	1	1	1	1	1	1	1	1	1	1	999
*	PANEL, L/S	61937200	1	1	1	1	1	1	1	1	1	1	1	1	1	1	999
31	PARTITION, CTRL. BOX	61802800	1	1	1	1	1	1	1	1	1	1	1	1	1	1	999
32	DECORATIVE PANEL	61822658	1	1	1	1											999
32	DECORATIVE PANEL	61823360													1	1	999
33	KNOBS, CTRL.	61493915	2	2	2	2									2	2	761
*	HOLDER, THERMISTER	61925001					1	1	1	1	1	1	1	1			764
*	HOLDER, AIR FILTER	60865900	2	2	2	2	2	2	2	2	2	2	2	2	2	2	756
*	FILTER, AIR	60865808	1	1	1	1	1	1	1	1	1	1	1	1	1	1	754
*	CLAMP, SUPPLY CORD	91500306	2	2	2	2	2	2	2	2	2	2	2	2	2	2	999
*	BRACKET, RESISTO BLOCK	61820600	1	1	1	1									1	1	999
34	GROMMET, COMPRESSOR	61028900	3	3	3	3	3	3	3	3	3	3	3	3	3	3	790
35	SCREW, COMPRESSOR MT.	91400400	3	3	3	3	3	3	3	3	3	3	3	3	3	3	999
*	COUNTER WEIGHT	61715800	3	3	3	3	3	3	3	3	3	3	3	3	3	3	999
36	PLENUM ASSLY.	61810206	1	1	1	1	1	1	1	1	1	1	1	1	1	1	753

*** PARTS NOT SHOWN**

SMALL CHASSIS "S" SERIES - 115V

REF	DESCRIPTION	PART NO.	KS				SS								YS		CODE
	CHASSIS PARTS		**KS12L10-E**	**KS12L10-F**	**KS15L10-C**	**KS15L10-D**	**SS08L10-E**	**SS08L10-F**	**SS10L10-D**	**SS10L10-E**	**SS12L10-E**	**SS12L10-F**	**SS14L10-D**	**SS14L10-E**	**YS09L10-F**	**YS09L10-G**	
37	INTAKE GRILLE	61808906	1	1	1	1	1	1	1	1	1	1	1	1	1	1	772
*	LATCH, INTAKE GRILLE	61989000	2	2	2	2	2	2	2	2	2	2	2	2	2	2	752
38	OUTER SHELL ASSLY	61825705	1	1	1	1	1	1	1	1	1	1	1	1	1	1	770
39	SILL PLATE	61808413	1	1	1	1	1	1	1	1	1	1	1	1	1	1	999
*	CHASSIS GUIDE, SHELL	61819601	2	2	2	2	2	2	2	2	2	2	2	2	2	2	999
*	FRIEDRICH SCRIPT	60169110	1	1	1	1	1	1	1	1	1	1	1	1	1	1	999
*	PUSHNUTS, SCRIPT	91002900	2	2	2	2	2	2	2	2	2	2	2	2	2	2	999
40	WINGBOARD	60294415	1	1	1	1	1	1	1	1	1	1	1	1			999
41	BRACKET, SUPPORT	61109513	2	2	2	2	2	2	2	2	2	2	2	2			999
42	ANGLE, WINGBOARD	61819811	2	2	2	2	2	2	2	2	2	2	2	2			999
43	ANGLE, TOP	61819711	1	1	1	1	1	1	1	1	1	1	1	1			999
*	HARDWARE BAG(SCREWS)	60846016	1	1	1	1	1	1	1	1	1	1	1	1			999
45	GASKET, CHASSIS.	61717301	1	1	1	1	1	1	1	1	1	1	1	1	1	1	780
45	GASKET, WINDOW.	60610304	1	1	1	1	1	1	1	1	1	1	1	1			780
*	CARTON, SHIPPING	61841922	1	1	1	1	1	1	1	1	1	1	1	1	1	1	999
	OPTIONAL ACCESSORIES ITEMS																
*	WINDOW KIT	WIKS													1	1	
*	DRAIN KIT, DC-2	01900235	1	1	1	1	1	1	1	1	1	1	1	1	1	1	999
*	START KIT	61008903	1	1	1	1	1	1	1	1	1	1	1	1	1	1	160
*	ANTI-ICE KIT	61680600	1	1	1	1	1	1	1	1	1	1	1	1	1	1	250

*** PARTS NOT SHOWN**

SMALL CHASSIS "S" SERIES - 230V

REF	DESCRIPTION	PART NO.	ES				SS				YS		CODE
	ELECTRICAL PARTS		ES12L33-D	ES12L33-E	ES16L33-C	ES16L33-D	SS12L30-E	SS12L30-F	SS16L30-D	SS16L30-E	YS13L33-D	YS13L33-E	
1	THERMOSTAT	61828400	1	1	1	1					1	1	120
*	RESISTOR	61808001	1	1	1	1					1	1	200
*	THERMOSTAT, DEFROST	61350314									1	1	122
*	REMOTE CONTROL	61826606					1	1	1	1			399
2	ELECTRONIC CTR.	61921194					1	1	1	1			331
*	OVERLOAD	61764521					1				1	1	190
*	OVERLOAD	61764556			1	1			1	1			190
*	OVERLOAD	61764540	1	1			1	1					190
4	CAPACITOR	61080534			1	1			1	1			150
4	CAPACITOR	61080536	1	1			1	1			1	1	150
5	SUPPLY CORD	60500323	1	1	1	1					1	1	220
5	SUPPLY CORD	60500322					1	1	1	1			220
6	SWITCH, SYS. 8 POS.	60607204	1	1	1	1					1	1	130
7	SWITCH (YES - NO)	61806105	1	1	1	1					1	1	132
8	FAN MOTOR	61871441	1	1	1	1	1	1	1	1	1	1	110
*	SOLENOID	25063605									1	1	240
8A	HEATER	61878610	1	1	1	1					1	1	210
REF	DESCRIPTION	PART NO.	ES				SS				YS		CODE
	REFRIGERATION PARTS		ES12L33-D	ES12L33-E	ES16L33-C	ES16L33-D	SS12L30-E	SS12L30-F	SS16L30-D	SS16L30-E	YS13L33-D	YS13L33-E	
9	COMPRESSOR	61716628									1	1	600
9	COMPRESSOR	61716645	1	1			1	1					600
9	COMPRESSOR	62199704			1	1			1	1			600
10	EVAPORATOR COIL	61850100	1				1				1		400
10	EVAPORATOR COIL	61850117		1				1				1	400
10	EVAPORATOR COIL	62050006				1				1			400
10	EVAPORATOR COIL	62050022			1				1				400
11	CONDENSER COIL	61850306											410
11	CONDENSER COIL	62050303	1		1		1		1				410
11	CONDENSER COIL	62050304		1		1		1		1			410
11	CONDENSER COIL	62050312									1		410
11	CONDENSER COIL	62050321										1	410
*	DRIER, LIQUID	60308101	1	1	1	1	1	1	1	1			480
*	DRIER, SUCTION	61828200									1	1	480
*	CHECK VALVE	61824404									1	1	510
*	REVERSING VALVE	25018305									1	1	500
*	CAPILLARY TUBE	03760543									1	1	471
*	CAPILLARY TUBE	03760545									1	1	471
*	CAPILLARY TUBE	03760473	1	1			1	1					471
*	CAPILLARY TUBE	01390005			1	1			1	1			471

*** PARTS NOT SHOWN**

SMALL CHASSIS "S" SERIES - 230V

REF	DESCRIPTION	PART NO.	ES				SS				YS		CODE
	CHASSIS PARTS		ES12L33-D	ES12L33-E	ES16L33-C	ES16L33-D	SS12L30-E	SS12L30-F	SS16L30-D	SS16L30-E	YS13L33-D	YS13L33-E	
12	SHROUD, CONDENSER	61803601	1	1	1	1	1	1	1	1	1	1	720
13	FAN BLADE	60542003	1	1	1	1	1	1	1	1	1	1	710
14	BLOWER WHEEL	60610603									1	1	700
14	BLOWER WHEEL	60610616	1	1	1	1	1	1	1	1			700
15	BRACE, COND. SHROUD	61802600	3	3	3	3	3	3	3	3	3	3	722
16	SCROLL	61814905	1	1	1	1	1	1	1	1	1	1	743
17	BLOWER FRONT	61817300	1	1	1	1	1	1	1	1	1	1	742
19	COVER, TOP	61906700	1	1	1	1	1	1	1	1	1	1	746
21	DECK	61817100	1	1	1	1	1	1	1	1	1	1	745
23	MOUNT, FAN MOTOR	61802500	1	1	1	1	1	1	1	1	1	1	900
25	BRACKET, HEATER MT.	61818900	1	1	1	1					1	1	999
27	BASE PAN	61809015	1	1	1	1							730
27	BASE PAN	61803441					1	1	1	1			730
27	BASE PAN	61809013									1	1	730
*	DRAIN PAN	61803800	1	1	1	1	1	1	1	1	1	1	840
*	BELLOWS, DRAIN VALVE	60179903	1	1	1	1					1	1	801
*	GRILLE, REAR	61818500	1	1	1	1	1	1	1	1	1	1	771
28	DOOR, SLIDE ASSLY.	61821500	1	1	1	1	1	1	1	1	1	1	810
*	CONNECTOR, SLIDE DOOR	61814800	1	1	1	1	1	1	1	1	1	1	811
29	PANEL, CTRL. MT.	61807251					1	1	1	1			999
29	PANEL, CTRL. MT.	61807250	1	1	1	1					1	1	999
30	BRACKET, CAP. MT	61820400	1	1	1	1	1	1	1	1	1	1	999
*	PANEL, L\S	61937200	1	1	1	1	1	1	1	1	1	1	999
31	PARTITION, CTRL. BOX	61802800					1	1	1	1			999
31	PARTITION, CTRL. BOX	61802801	1	1	1	1					1	1	999
32	DECORATIVE PANEL	61823360	1	1	1	1					1	1	999
33	KNOBS, CTRL.	61493915	2	2	2	2					2	2	761
*	HOLDER, THERMISTER	61925001					1	1	1	1			764
*	HOLDER, AIR FILTER	60865900	2	2	2	2	2	2	2	2	2	2	756
*	FILTER, AIR	60865808	1	1	1	1	1	1	1	1	1	1	754
*	CLAMP, SUPPLY CORD	91500306	2	2	2	2	2	2	2	2	2	2	999
*	BRACKET, RESISTO BLOCK	61820600	1	1	1	1					1	1	999
34	GROMMET, COMPRESSOR	61028900	3	3	3	3	3	3	3	3	3	3	790
35	SCREW, COMPRESSOR MT.	91400400	3	3	3	3	3	3	3	3	3	3	999
36	PLENUM ASSLY.	61810206	1	1	1	1	1	1	1	1	1	1	753

*** PARTS NOT SHOWN**

SMALL CHASSIS "S" SERIES - 230V

REF	DESCRIPTION	PART NO.	ES				SS				YS		CODE
	CHASSIS PARTS		ES12L33-D	ES12L33-E	ES16L33-C	ES16L33-D	SS12L30-E	SS12L30-F	SS16L30-D	SS16L30-E	YS13L33-D	YS13L33-E	
37	INTAKE GRILLE	61808906	1	1	1	1	1	1	1	1	1	1	772
*	LATCH, INTAKE GRILLE	61989000	2	2	2	2	2	2	2	2	2	2	752
38	OUTER SHELL ASSLY	61825705	1	1	1	1	1	1	1	1	1	1	770
39	SILL PLATE	61808413	1	1	1	1	1	1	1	1	1	1	999
*	CHASSIS GUIDE, SHELL	61819601	2	2	2	2	2	2	2	2	2	2	999
*	FRIEDRICH SCRIPT	60169110	1	1	1	1	1	1	1	1	1	1	999
*	PUSHNUTS, SCRIPT	91002900	2	2	2	2	2	2	2	2	2	2	999
40	WINGBOARD	60294415					1	1	1	1			999
41	BRACKET, SUPPORT	61109513					2	2	2	2			999
42	ANGLE, WINGBOARD	61819811					2	2	2	2			999
43	ANGLE, TOP	61819711					1	1	1	1			999
44	GASKET, VINYL	60610304					1	1	1	1			780
*	HARDWARE BAG(SCREWS)	60846017	1	1	1	1					1	1	999
*	HARDWARE BAG(SCREWS)	60846016					1	1	1	1			999
45	GASKET, CHASSIS	61717301	1	1	1	1	1	1	1	1	1	1	780
45	GASKET, WINDOW	60610304					1	1	1	1			780
*	CARTON, SHIPPING	61841922	1	1	1	1	1	1	1	1	1	1	999
	OPTIONAL ACCESSORY ITEMS												
*	WINDOW KIT	WIKS	1	1	1	1					1	1	
*	DRAIN KIT, DC-2	01900235	1	1	1	1	1	1	1	1	1	1	999
*	START KIT	61008903	1	1	1	1	1	1	1	1	1	1	160

*** PARTS NOT SHOWN**

CHASSIS PARTS (EM, KM, SM, & YM)

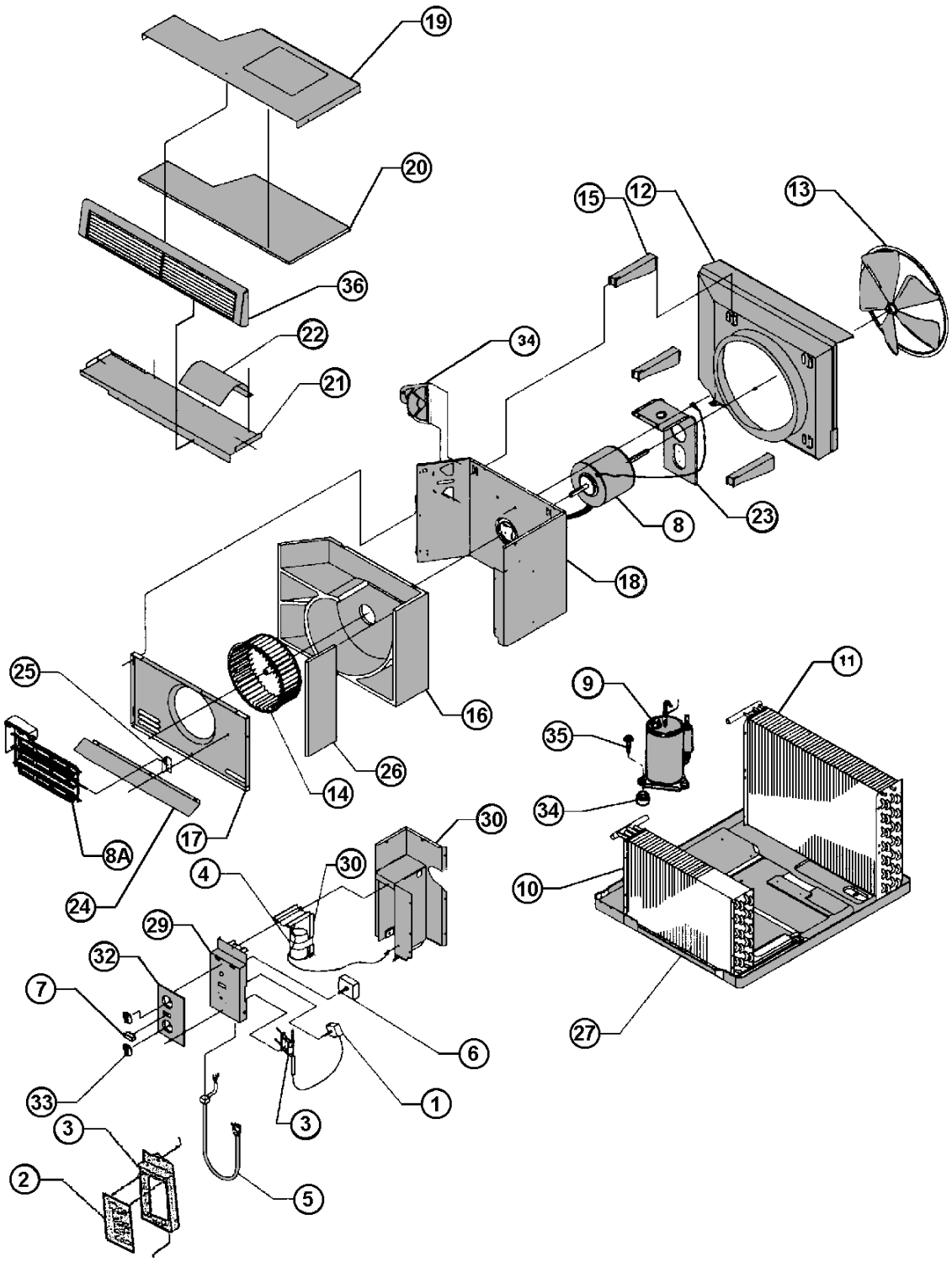

CABINET & MOUNTING PARTS (EM, KM, SM, YM)

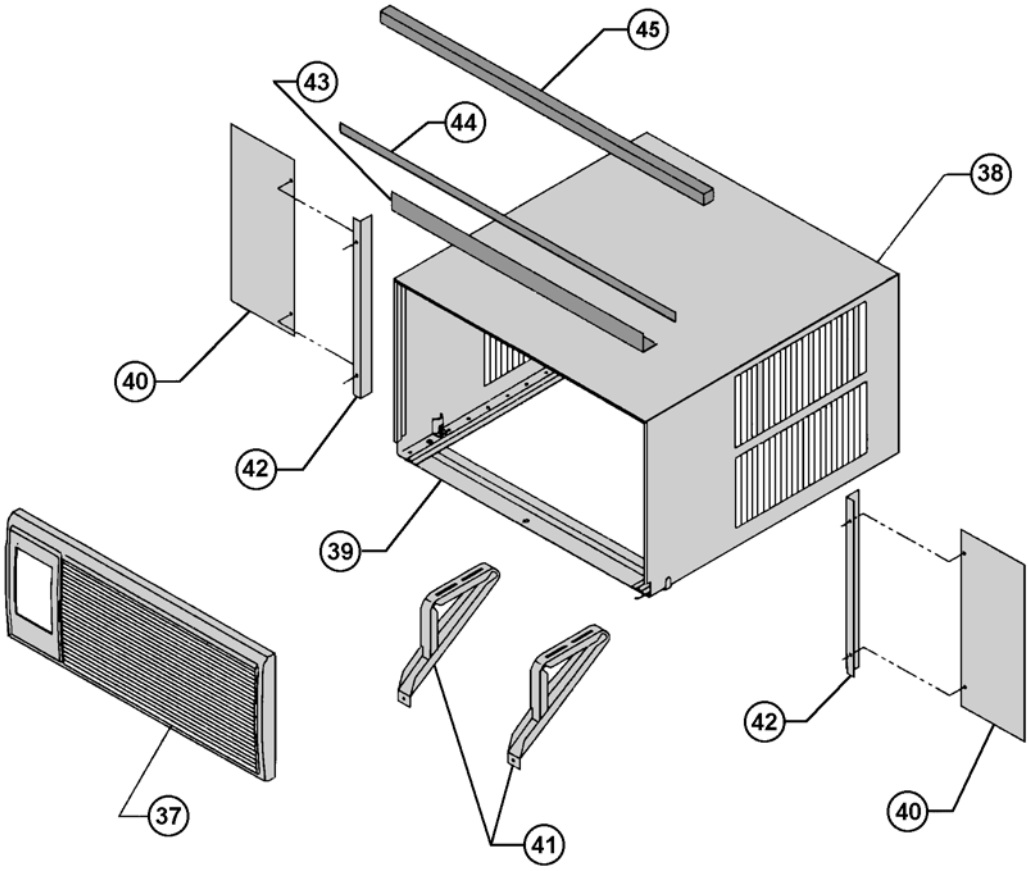

MEDIUM CHASSIS "M" SERIES

REF	DESCRIPTION	PART NO.	EM		KM				SM						YM		CODE
	ELECTRICAL PARTS		EM18L34-C	EM24L34-B	KM18L30-C	KM18L30-D	KM24L30-C	KM24L30-D	SM18L30A-D	SM18L30A-E	SM21L30-E	SM21L30-F	SM24L30-C	SM24L30-D	YM18L34-D	YM18L34-E	
1	THERMOSTAT	61828500			1	1	1	1									120
1	THERMOSTAT	61828400	1	1											1	1	120
*	RESISTOR	61808001	1	1	1	1	1	1							1	1	200
*	THERMOSTAT, DEF.	61350314													1	1	122
2	ELECTRONIC BOARD	61921194							1	1	1	1	1	1			331
*	REMOTE CONTROL	61826606							1	1	1	1	1	1			350
*	OVERLOAD	61764522													1	1	190
*	OVERLOAD	61764556							1	1							190
*	OVERLOAD	61764557	1		1	1											190
4	CAPACITOR	61080557									1	1					150
4	CAPACITOR	61080529		1			1	1					1	1	1	1	150
4	CAPACITOR	61080534	1		1	1			1	1							150
5	SUPPLY CORD	60500371	1	1											1	1	220
5	SUPPLY CORD	60500322			1	1			1	1	1	1					220
5	SUPPLY CORD	60500323					1	1					1	1			220
6	SWITCH SYS. 8 POS.	60607204	1	1											1	1	130
6	SWITCH SYS. 6 POS.	60607205			1	1	1	1									130
7	SWITCH (YES - NO)	61806105	1	1	1	1	1	1							1	1	132
8	FAN MOTOR	61871432	1	1	1	1	1	1	1	1	1	1	1	1	1	1	110
*	SOLENOID COIL	25063605													1	1	240
8A	HEATER	61878611	1	1											1	1	210
REF	**DESCRIPTION**	**PART NO.**	**EM**		**KM**				**SM**						**YM**		**CODE**
	REFRIGERATION PARTS		EM18L34-C	EM24L34-B	KM18L30-C	KM18L30-D	KM24L30-C	KM24L30-D	SM18L30A-D	SM18L30A-E	SM21L30-E	SM21L30-F	SM24L30-C	SM24L30-D	YM18L34-D	YM18L34-E	
9	COMPRESSOR	61716652		1			1	1					1	1			600
9	COMPRESSOR	61716651									1	1					600
9	COMPRESSOR	61716663	1		1	1											600
9	COMPRESSOR	62199704							1	1							600
9	COMPRESSOR	61716660													1	1	600
10	EVAPORATOR COIL	61850014	1		1												400
10	EVAPORATOR COIL	61850025				1											400
10	EVAPORATOR COIL	62050019					1		1		1		1		1		400
10	EVAPORATOR COIL	62050025		1				1		1		1		1		1	400
11	CONDENSER COIL	62050215					1		1				1				410
11	CONDENSER COIL	61850200	1		1						1	1					410
11	CONDENSER COIL	61850205													1	1	410
11	CONDENSER COIL	62050216		1				1		1				1			410
*	DRIER, LIQUID	60308101	1	1	1	1	1	1	1	1	1	1	1	1			480
*	DRIER, SUCTION	61828200													1	1	480
*	CHECK VALVE	61824404													1	1	471
*	REVERSING VALVE	25018705													1	1	500
*	CAPILLARY TUBE	3760479															471
*	CAPILLARY TUBE	1389975	1		1	1											471
*	CAPILLARY TUBE	3760545							3	3					1	1	471
*	CAPILLARY TUBE	3760511													1	1	471
*	CAPILLARY TUBE	3760452		3			3	3			3	3	3	3			471

*** PARTS NOT SHOWN**

MEDIUM CHASSIS "M" SERIES PARTS LIST

REF	DESCRIPTION	PART NO.	EM		KM				SM						YM		CODE
	CHASSIS PARTS		EM18L34-C	EM24L34-B	KM18L30-C	KM18L30-D	KM24L30-C	KM24L30-D	SM18L30A-D	SM18L30A-E	SM21L30-E	SM21L30-F	SM24L30-C	SM24L30-D	YM18L34-D	YM18L34-E	
12	SHROUD, CONDENSER	61804901	1	1	1	1	1	1	1	1	1	1	1	1	1	1	720
13	FAN BLADE, COND.	60542004	1	1	1	1	1	1	1	1	1	1	1	1	1	1	710
14	BLOWER WHEEL, EVAP.	60610617	1		1	1			1	1	1	1					700
14	BLOWER WHEEL, EVAP.	60610618		1			1	1					1	1	1	1	700
15	BRACE, COND.SHROUD	61802600	3	3	3	3	3	3	3	3	3	3	3	3	3	3	722
16	SCROLL	61817505	1	1	1	1	1	1	1	1	1	1	1	1	1	1	743
17	BLOWER FRONT	61817400	1	1	1	1	1	1	1	1	1	1	1	1	1	1	742
23	MOUNT, FAN MOTOR	61804100	1	1	1	1	1	1	1	1	1	1	1	1	1	1	900
25	BRACKET, HTR	61818900	1	1											1	1	730
27	BASE PAN	61809015	1	1											1	1	730
27	BASE PAN	61803441			1	1	1	1			1	1	1	1			730
27	BASE PAN	61803411							1	1							730
*	BELLOWS, DRAIN VALVE	60179903	1	1											1	1	801
*	DRAIN PAN, EVAP.	61803800	1	1	1	1	1	1	1	1	1	1	1	1	1	1	840
*	GRILLE, REAR	61818501	1	1	1	1	1	1	1	1	1	1	1	1	1	1	771
28	DOOR, SLIDE ASY	61821500	1	1	1	1	1	1	1	1	1	1	1	1	1	1	810
*	CONNECTOR SLIDE ASY	61814800	1	1	1	1	1	1	1	1	1	1	1	1	1	1	811
*	WIRE CLIP, SLIDE ASSY	60301800	1	1	1	1	1	1	1	1	1	1	1	1	1	1	999
29	PANEL, CTRL. MOUNT	61811050	1	1	1	1	1	1							1	1	999
29	PANEL, CTRL. MOUNT	61811051							1	1	1	1	1	1			999
32	DECORATIVE PANEL	61823360	1	1											1	1	999
32	DECORATIVE PANEL	61822658			1	1	1	1									999
33	KNOBS, CRTL.	61493915	2	2	2	2	2	2							2	2	761
*	BRACKET,RESISTOR BLK	61820600	1	1	1	1	1	1							1	1	999
*	HOLDER, THERMISTOR	61925001							1	1	1	1	1	1			764
*	HOLDER, AIR FILTER	60865900	2	2	2	2	2	2	2	2	2	2	2	2	2	2	756
*	FILTER, AIR	60865809	1	1	1	1	1	1	1	1	1	1	1	1	1	1	754
*	CLAMP, SUPPLY CORD	91500308	2	2											2	2	999
*	CLAMP, SUPPLY CORD	91500306			2	2	2	2	2	2	2	2	2	2			999
34	GROMMET, COMP.	61028900	3		3	3			3	3	3	3			3	3	790
34	GROMMET, COMP.	1150934		3			3	3					3	3			790
35	SCREW, COMP.	91400400	3	3	3	3	3	3	3	3	3	3	3	3	3	3	999
36	PLENIUM ASLY.	61810206	1	1	1	1	1	1	1	1	1	1	1	1	1	1	753
37	GRILLE, INTAKE	61811111	1	1	1	1	1	1	1	1	1	1	1	1	1	1	772
*	LATCH, GRILLE INTAKE	61989000	2	2	2	2	1	1	2	2	2	2	2	2	2	2	999
38	OUTER SHELL	61825706	1	1	1	1	1	1	1	1	1	1	1	1	1	1	770
39	SILL PLATE	61808413	1	1	1	1	1	1	1	1	1	1	1	1	1	1	999
*	CHASSIS GUIDE, SHELL	61819601	2	2	2	2	2	2	2	2	2	2	2	2	2	2	999
*	CHASSIS RETAINER	61826400	1	1	1	1	1	1	1	1	1	1	1	1	1	1	999
*	FRIEDRICH SCRIPT	60169110	1	1	1	1	1	1	1	1	1	1	1	1	1	1	999
*	PUSHNUTS, SCRIPT	91002900	2	2	2	2	2	2	2	2	2	2	2	2	2	2	999
40	WINGBOARD	60294420			1	1	1	1	1	1	2	2	1	1			999
41	BRACKET, SUPPORT	61109513			2	2	2	2	2	2	2	2	2	2			999
42	ANGLE, WINGBOARDS	61819813			2	2	2	2	2	2	2	2	2	2			999
43	ANGLE, TOP SUPPORT	61819711			1	1	1	1	1	1	1	1	1	1			999
*	HARDWARE (SCREWS)	60846017	1	1											1	1	999
*	HARDWARE (SCREWS)	60846016			1	1	1	1	1	1	1	1	1	1			999
45	GASKET, CHASSIS	61717301	1	1	1	1	1	1	1	1	1	1	1	1	1	1	780
45	GASKET, WINDOW	60073300			1	1	1	1	1	1	1	1	1	1			780
46	GASKET, VINYL	60610304			1	1	1	1	1	1	1	1	1	1			780
*	CARTON, SHIPPING	61841923	1	1	1	1	1	1	1	1	1	1	1	1	1	1	999
OPTIONAL ACCESSORY ITEMS																	
*	WINDOW INSTALLATION KIT	WIKM	1	1											1	1	
*	DRAIN KIT, DC-2	1900235	1	1	1	1	1	1	1	1	1	1	1	1	1	1	
*	START KIT	61008903	1	1	1	1	1	1	1	1	1	1	1	1	1	1	

*** PARTS NOT SHOWN**

CHASSIS PARTS (SL, EL, & YL)

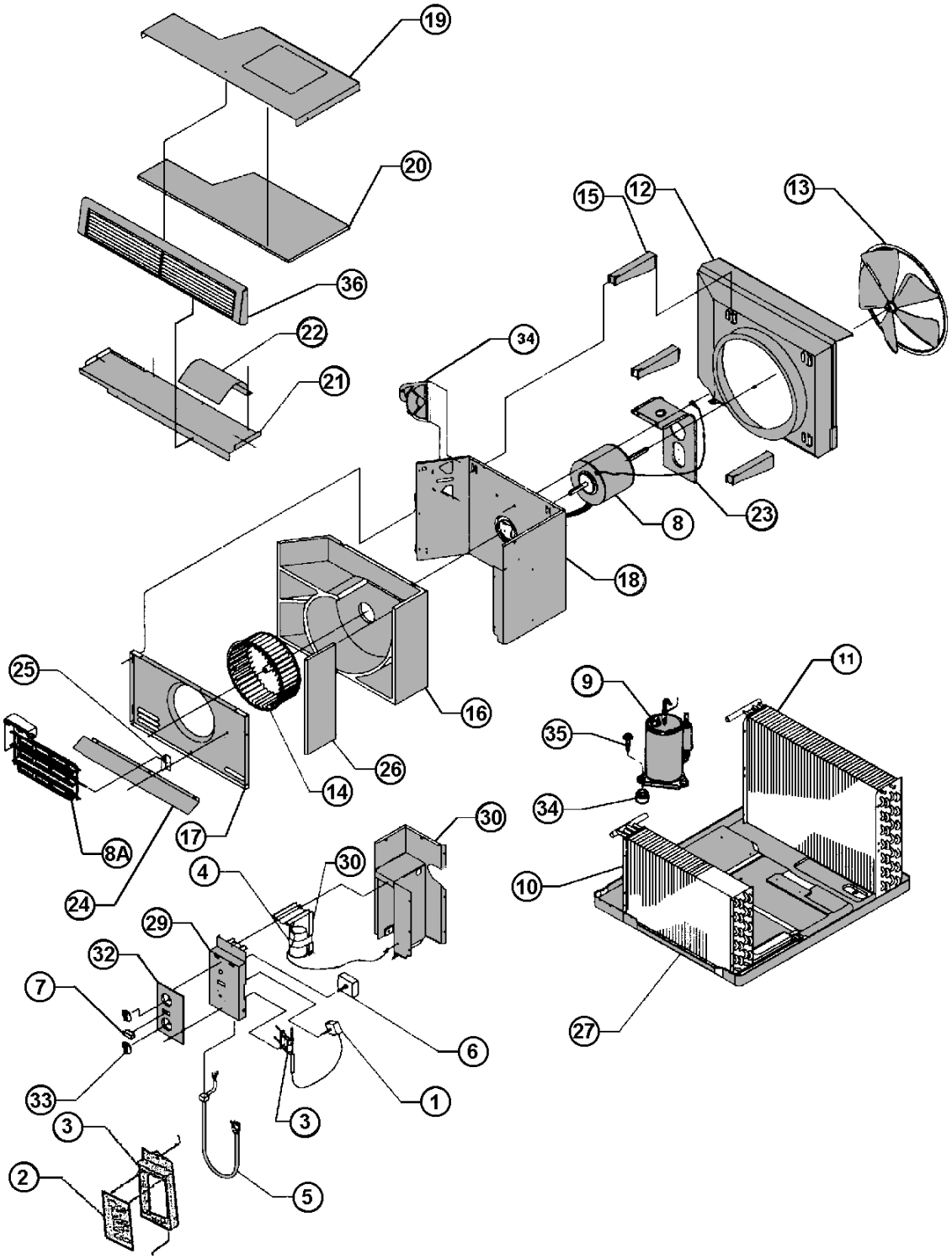

CABINET & MOUNTING PARTS (SL, EL, & YL)

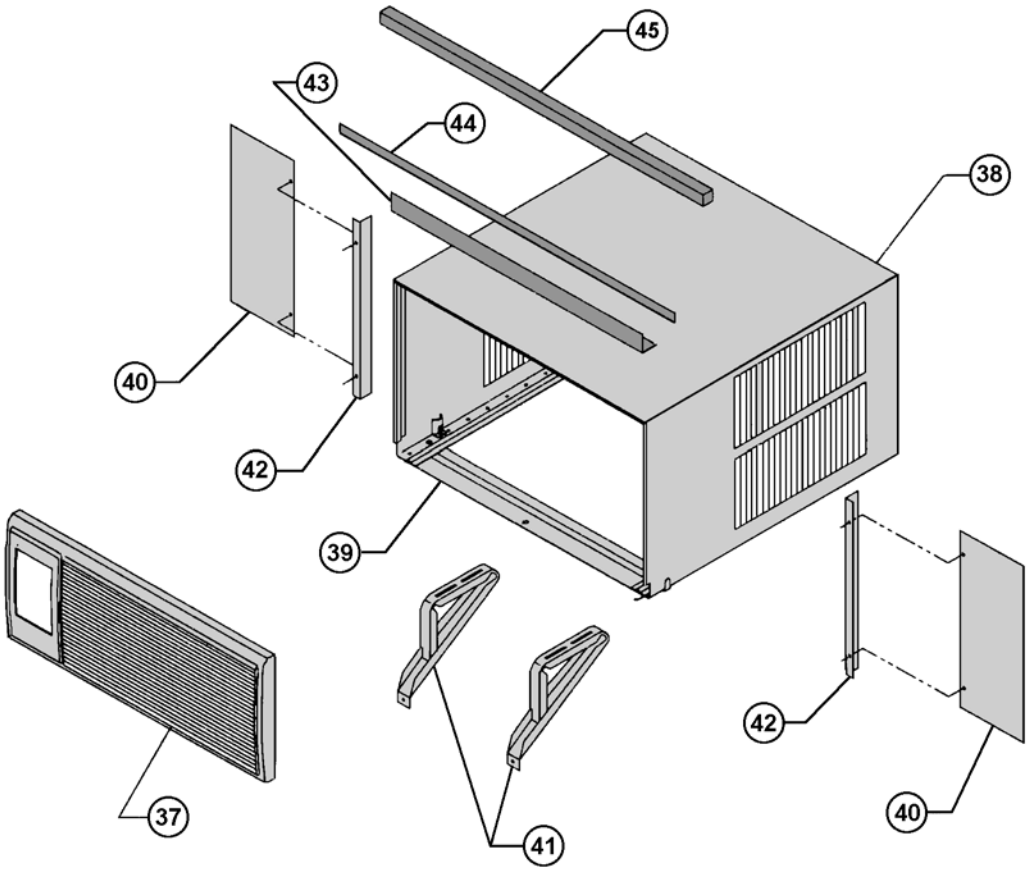

LARGE CHASSIS "L" SERIES

REF	DESCRIPTION	PART NO.	SL				EL		YL		CODE
	ELECTRICAL PARTS		SL28L30-D	SL28L30-E	SL36L30A-D	SL36L30A-E	EL36L35A-D	EL36L35A-E	YL24L35-E	YL24L35-F	
1	THERMOSTAT	61828500	1	1	1	1					120
1	THERMOSTAT	61828400					1	1	1	1	120
*	THERMOSTAT, DEF.	61350314							1	1	122
4	CAPACITOR	61080529							1	1	150
4	CAPACITOR	61080557	1	1							150
4	CAPACITOR	61080527			1	1	1	1			150
5	SUPPLY CORD	60500323	1	1							220
5	SUPPLY CORD	60500371			1	1	1	1	1	1	220
3	RESISTOR	61808001	1	1	1	1	1	1	1	1	200
6	SWITCH SYS. 5 POS.	60607203	1	1	1	1					130
6	SWITCH SYS. 8 POS.	60607204					1	1	1	1	130
7	SWITCH (YES - NO)	61806105	1	1	1	1	1	1	1	1	132
8	FAN MOTOR	61871466			1	1	1	1			110
8	FAN MOTOR	61871467	1	1					1	1	110
*	SOLENOID	25063605							1	1	240
8A	HEATER	61878612					1	1	1	1	210
*	COMPRESSOR HARNESS	61821409	1	1					1	1	270
*	COMPRESSOR HARNESS	61821405			1	1	1	1			270
REF	DESCRIPTION	PART NO.	SL				EL		YL		CODE
	REFRIGERATION PARTS		SL28L30-D	SL28L30-E	SL36L30A-D	SL36L30A-E	EL36L35A-D	EL36L35A-E	YL24L35-E	YL24L35-F	
9	COMPRESSOR	61716652							1	1	600
9	COMPRESSOR	61716650	1	1							600
9	COMPRESSOR	61716669			1	1	1	1			600
10	EVAPORATOR COIL	62050001	1		1		1		1		400
10	EVAPORATOR COIL	62050004		1		1		1		1	400
11	CONDENSER COIL	61850223			1		1				410
11	CONDENSER COIL	61850225	1								410
11	CONDENSER COIL	61850229								1	410
11	CONDENSER COIL	61850230		1							410
11	CONDENSER COIL	61850231				1		1			410
11	CONDENSER COIL	61850203							1		410
*	DRIER, LIQUID	60308101	1	1	1	1	1	1			480
*	DRIER, SUCTION	61828200							1	1	480
*	Drier/Ck Valve/ Cap Tube	92500001							1	1	480
*	REVERSING VALVE	25018705							1	1	240
*	REVERSING VALVE and SOLENOID	25022032							1	1	500
*	CAPILLARY TUBE (HEAT)	01389985							1	1	471
*	CAPILLARY TUBE (COOL)	03760518							1	1	471
*	CAPILLARY TUBE	01390005	2	2	2	2	2	2			471

*** PARTS NOT SHOWN**

LARGE CHASSIS "L" SERIES

REF	DESCRIPTION	PART NO.	SL				EL		YL		CODE
	CHASSIS PARTS		SL28L30-D	SL28L30-E	SL36L30A-D	SL36L30A-E	EL36L35A-D	EL36L35A-E	YL24L35-E	YL24L35-F	
*	SHROUD, W/SUMP LRG	61807702	1	1	1	1	1	1	1	1	720
13	FAN BLADE, COND.	60542007	1	1	1	1	1	1	1	1	710
14	BLOWER WHEEL, EVAP.	60610620	1	1					1	1	700
14	BLOWER WHEEL, EVAP.	60610619			1	1	1	1			700
15	BRACE, COND.SHROUD	61810000	3	3	3	3	3	3	3	3	722
16	SCROLL	61818100	1	1	1	1	1	1	1	1	743
17	BLOWER FRONT	61817800	1	1	1	1	1	1	1	1	742
25	BRACKET, HTR	61818900					1	1	1	1	999
27	BASE PAN	61807111			1	1					730
27	BASE PAN	61807114	1	1							730
27	BASE PAN	61809513							1	1	730
27	BASE PAN	61809511					1	1			730
*	BELLOWS, DRAIN VALVE	60179903					1	1	1	1	801
*	DRAIN PAN, EVAP.	61807400	1	1	1	1	1	1	1	1	840
*	GRILLE, REAR	61818502	1	1	1	1	1	1	1	1	771
29	PANEL, CTRL. MOUNT	61806950	1	1	1	1	1	1	1	1	999
31	PARTITION, CTRL. BOX	61807000	1	1	1	1					999
31	PARTITION, CTRL. BOX	61807001					1	1	1	1	999
32	DECORATIVE PANEL	61822655	1	1	1	1					999
32	DECORATIVE PANEL	61823360					1	1	1	1	999
33	KNOBS, CRTL.	61493915	2	2	2	2	2	2	2	2	761
*	BRACKET,RESISTOR BLK	61820600	1	1	1	1	1	1	1	1	999
23	MOUNT, FAN MOTOR	61806700	1	1	1	1	1	1	1	1	900
*	HOLDER, AIR FILTER	60865900	2	2	2	2	2	2	2	2	756
*	FILTER, AIR	60865810	1	1	1	1	1	1	1	1	754
*	CLAMP, SUPPLY CORD	91500306	2	2							999
*	CLAMP, SUPPLY CORD	91500308			2	2	2	2	2	2	999
34	GROMMET, COMP.	01150934	3	3	3	3	3	3	3	3	790
35	SCREW, COMP.	91400400	3	3	3	3	3	3	3	3	999
36	PLENUM ASLY.	61810506	1	1	1	1	1	1	1	1	753
37	GRILLE, INTAKE	61810406	1	1	1	1	1	1	1	1	772
*	LATCH, GRILLE INTAKE. METAL	61989000	2	2	2	2	2	2	2	2	772
38	OUTER SHELL	61825707	1	1	1	1	1	1	1	1	770
39	SILL PLATE	61808411	1	1	1	1	1	1	1	1	999
*	CHASSIS GUIDE, SHELL	61819601	2	2	2	2	2	2	2	2	999
*	FRIEDRICH SCRIPT	60169110	1	1	1	1	1	1	1	1	999
*	PUSHNUTS, SCRIPT	91002900	2	2	2	2	2	2	2	2	999
40	WINGBOARD	60294425	1	1	1	1					999
*	HARDWARE (SCREWS)	60846016	1	1	1	1					999
*	HARDWARE (SCREWS)	60846017					1	1	1	1	999
45	GASKET, CHASSIS	61717301	1	1	1	1	1	1	1	1	780
45	GASKET, WINDOW	60073300	1	1	1	1					780
44	GASKET, VINYL	60610304	1	1	1	1					780
*	CARTON, SHIPPING	61841924	1	1	1	1	1	1	1	1	999
43	ANGLE, TOP SUPPORT	61819713	1	1	1	1					999
42	ANGLE, WINGBOARDS	61819815	2	2	2	2					999
	OPTIONAL ACCESSORIES										
*	WINDOW INSTALLATION KIT	WIKL					1	1	1	1	
*	DRAIN KIT, DC-2	1900235	1	1	1	1	1	1	1	1	
*	HARD START KIT	61840900	1	1	1	1	1	1	1	1	

*** PARTS NOT SHOWN**

Use Factory-Certified Parts.

FRIEDRICH AIR CONDITIONING CO.
Post Office Box 1540 · San Antonio, Texas 78295-1540
4200 N. Pan Am Expressway · San Antonio, Texas 78218-5212
(210) 357-4400 · FAX (210) 357-4480
www.friedrich.com
Printed in the U.S.A.

920-132-03 (6-08)