This Owner's Manual is provided and hosted by Appliance Factory Parts.

Appliance Factory Parts
Experts in BBQ, Humidifier, & Appliance Parts
1-800-955-7075

GE PDW8000G0CC Owner's Manual

Shop genuine replacement parts for GE PDW8000G0CC

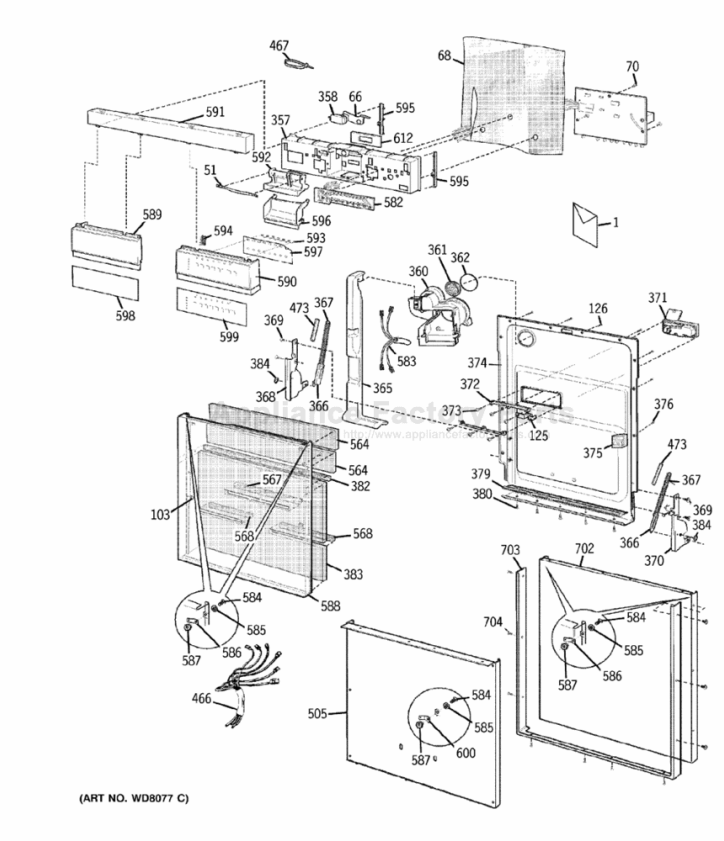

Find Your GE Dishwasher Parts - Select From 6722 Models

-------- Manual continues below --------

Installation Instructions

If you have questions, call 800-GE-CARES or visit our website at: **www.GEAppliances.com**

Built-In Dishwashers

PDW8000, PDW8060

Design Guide with
Installation Instructions

GE Appliances

BEFORE YOU BEGIN

Read these instructions completely and carefully.

- **IMPORTANT** - Save these instructions for local inspector's use. Observe all governing codes and ordinances.
- **Note to Installer** - Be sure to leave these instructions with the Consumer.
- **Note to Consumer** - Keep these instructions with your Owner's Manual for future reference.

- **Skill Level –** Installation of this dishwasher requires basic mechanical and electrical skills. **Proper installation is the responsibility of the installer. Product failure due to improper installation is not covered under the GE Appliance Warranty.**

- **Completion Time – 1 to 2 Hours.** New installations require more time than replacement installations.

- **IMPORTANT –** The dishwasher MUST be installed to allow for future removal from the enclosure if service is required.

If you received a damaged dishwasher, you should immediately contact your dealer or builder.

READ CAREFULLY.
KEEP THESE INSTRUCTIONS.

FOR YOUR SAFETY

Read and observe all CAUTION and WARNINGS shown throughout these instructions.

CONTENTS

Design Information
Product Dimensions 3
Models Available 3
Advance Planning 3
Installation Preparation
Materials You Will Need 4
Tools You Will Need 4
Parts Supplied 5
Prepare Dishwasher Enclosure 5
Drain Requirements 6
Prepare Electrical Wiring 7
Prepare Hot Water Line 8
Custom Panel Dimensions
Custom Panels for PDW8000 9

Installation Instructions
Step 1, Remove Packaging 10
Step 2, Install Leveling Legs 10
Step 3, Remove Access Covers 10
Step 4, Install 90° Elbow 10
Step 5, Install Power Cord 11
Step 6, Level Dishwasher 11
Step 7, Slide Dishwasher into Opening 11
Step 8, Connect Water Line 11
Step 9, Connect Drain Line 12
Step 10, Connect Electrical 12
Step 11, Position and Level Dishwasher 13
Step 12, Pre-Test Check List 13
Step 13, Dishwasher Wet Test 13
Step 14, Secure Dishwasher to Cabinet or Countertop 14
Step 15, Install Toekick 14
Step 16, Install Side Filler Strips 15

Design Information

PRODUCT DIMENSIONS

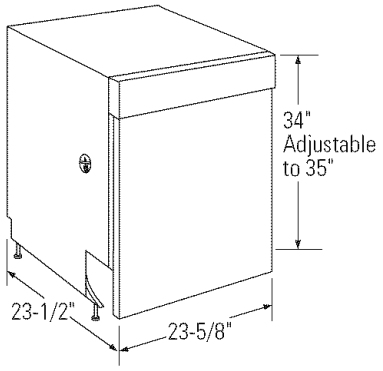

DISHWASHER MODELS

Traditional Built-In

PDW8000 BB, Black - Accepts 1/4" or 3/4" custom panels

PDW8000 WW White - Accepts 1/4" or 3/4" custom panels

PDW8000 CC Bisque - Accepts 1/4" or 3/4" custom panels

Trim Kits

- GPF725W (white), GPF725B (black) or GPF725C (bisque) custom panel kits, supports a 1/4" thick custom door panel.
- ZPF675W (white), ZPF675B (black), ZPF675C (bisque), custom panel kits support a 3/4" thick custom door panel.

Stainless Steel Built-In

PDW8060 SS, Stainless steel door

ADVANCE PLANNING

- These dishwashers are designed for versatility, adaptable to virtually any installation.
- All models have a full length door or a modified door to accept a full cabinet panel without the traditional access panel
- Side tub flange trim is adjustable and will conceal any slight gap between the dishwasher and adjacent cabinetry.
- These dishwashers may be installed beneath countertops of stone or other materials that will not accept screws. No trim kit required.

Standard installation in 24" deep cabinets

- In standard 24" deep cabinets, the dishwasher door will be flush with adjacent cabinetry.
- Models with 3/4" thick custom door panel will fit flush with adjacent cabinetry.

Supplied or Custom Toekicks

- A 2-piece toekick is supplied with all models. The toekick is height and depth adjustable.
- Depending on cabinetry style, a custom toekick can also be installed to match cabinetry. Care must be taken to assure door swing clearance above the toekick.

ADA-Compliant
Installation below 34" high countertops

A reduced height installation (32-1/2" min.) beneath a 34" countertop, can be accomplished by removing the front leveling legs. The rear legs should be screwed in flush with the bottom support, as shipped. The front of the dishwasher must be shimmed to level the dishwasher. Water and electrical must be routed through the back wall.

Installation Preparation

MATERIALS YOU WILL NEED:

Materials Required for All Installations

- ☐ 90° Elbow (3/8"NPT external thread on one end, opposite end sized to fit water supply)

Note: Use new ferrule. Do not use old parts.

- ☐ Strain relief for electrical connection
- ☐ Thread seal tape
- ☐ UL Listed wire connectors (3)
- ☐ Screw type hose clamps

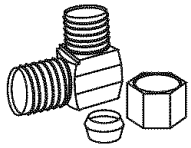
90° Elbow

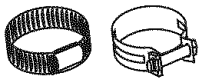
Screw Type Clamps

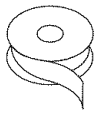
Thread Seal Tape

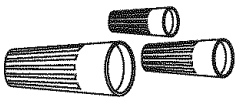
Wire Nuts

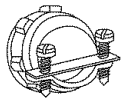
Strain Relief

Materials For New Installations Only:

- ☐ Air gap for drain hose, if required
- ☐ Waste tee for house plumbing, if applicable
- ☐ Electrical cable or power cord, if applicable
- ☐ Hand shut-off valve (recommended)
- ☐ Water line 3/8" min. copper or 1/2" min. plastic (plastic must be tested for temperature and pressure)
- ☐ Coupler for extending drain line, if applicable

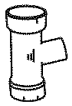
Waste Tee

Shut-Off Valve

Electrical Cable or Power Cord

Air Gap

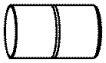
Coupler

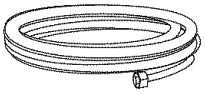
Hot Water Line

TOOLS YOU WILL NEED:

Tools Required for All Installations

- ☐ Phillips head and flat blade screwdrivers
- ☐ 3/8", 5/16" and 1/4" nutdrivers
- ☐ Level
- ☐ Carpenters square
- ☐ Measuring tape
- ☐ Safety glasses
- ☐ Flashlight
- ☐ Bucket to catch water when flushing the line
- ☐ Tubing cutter
- ☐ Gloves to protect against sharp edges
- ☐ Wire strippers

For New Installations Only:

- ☐ Drill and appropriate bits
- ☐ Hole saw set

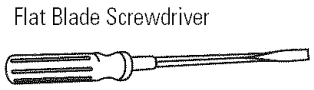
Flat Blade Screwdriver

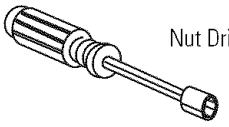
Nut Driver

Safety Glasses

Phillips Head Screwdriver

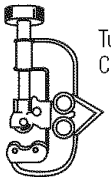
Tubing Cutter

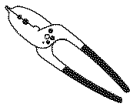
Wire Strippers

Bucket

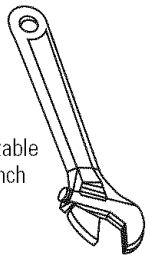
Adjustable Wrench

Flashlight

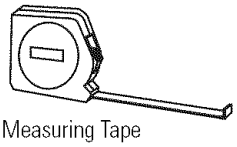
Measuring Tape

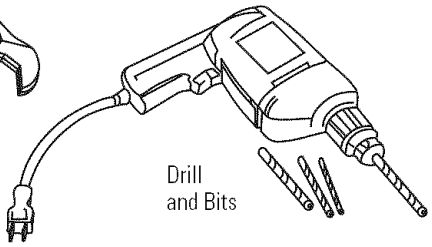
Drill and Bits

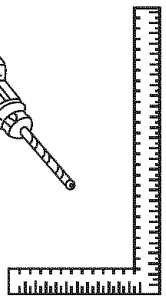
Square

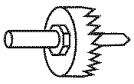
Hole Saw Set

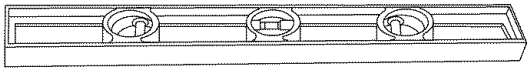
Level

Gloves

PARTS SUPPLIED:

Remove the hardware accessory bag and other parts from inside or taped to the outside of the dishwasher. Check contents against illustrations to insure that all parts are included.

- ☐ 2-piece toekick
- ☐ 6 screws (see illustration)
- ☐ 2 leveling legs
- ☐ Junction box cover

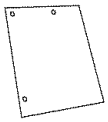

Junction Box Cover with screws

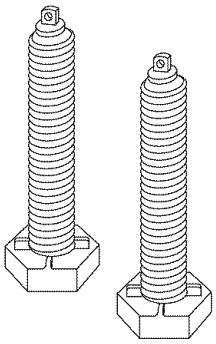

2 Leveling Legs

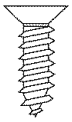

Screws A
(2) Countertop Mounting Screws

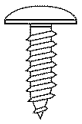

Screws B
(2) Cabinet Mounting Screws

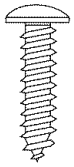

Screws C
(2) Color Matched Toekick Screws

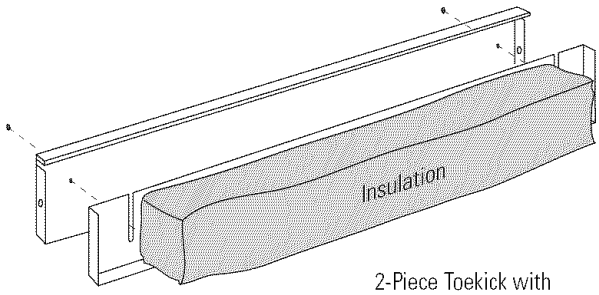

2-Piece Toekick with Sound Insulation

PREPARE DISHWASHER ENCLOSURE

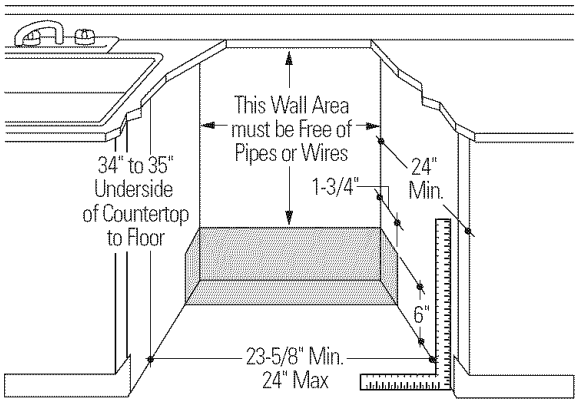

- The rough cabinet opening must be at least 24" deep, 23-5/8" min. to 24" wide. The height should be 34" min. and 35" max.

Note: ADA installation, beneath 34" high countertops may be accomplished by removing front leveling legs. Drain hose, water and electrical must be routed through the cutout on the back of the dishwasher.

- The dishwasher must be installed so that drain hose is no more than 10 feet in length for proper drainage.
- The dishwasher must be fully enclosed on the top, sides and back, but should not support any part of the enclosure.

- The floor inside the opening must be even and level with the finished floor of the kitchen. If the kitchen floor is tile, it may be higher than the floor of the installation cutout. Pieces of wood may be placed into the cutout floor to make it level or higher than the room floor. This will allow easy removal for any future service.

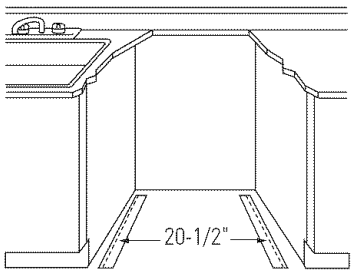

Corner Installation

- When installing into a corner, allow 2" min. clearance between dishwasher and adjacent cabinet or wall.
- Allow 24-1/2" min. clearance from the front of the dishwasher for door opening.

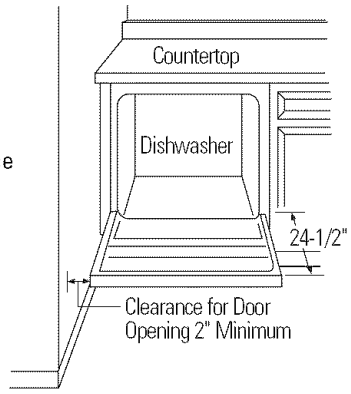

DRAIN REQUIREMENTS

- Follow local codes and ordinances.
- Do not exceed 10 feet distance to drain.
- To prevent back flow into the dishwasher, connect drain line to an air gap or use a 30" high drain loop, depending on local codes.
- Air gap must be used when waste tee or disposer connection is less than 18" above the floor to prevent siphoning.

DETERMINE DRAIN METHOD

The type of drain installation depends on the following questions.

☐ Do local codes or ordinances require an air gap?
☐ Will waste tee or disposer connection be less than 18" above the floor?
☐ Will installation have a high drain loop less than 30" above the floor?

If the answer to ANY of these questions is YES, Method 1 MUST be used.

- If all answers are NO, either method may be used.

⚠ CAUTION

An air gap MUST BE USED if the drain hose is connected to a waste tee or disposer lower than 18" above the floor level.

- Failure to provide the proper drain connection using an air gap or a 30" min. high drain loop will result in improper draining of the dishwasher which may cause damage or poor wash performance.

⚠ PRUDENCE

Il DOIT Y AVOIR une coupure antirefoulement si le tuyau de vidange est branché sur un raccord d'égout ou un broyeur d'ordures à moins de 46 cm (18 po) du sol.

- Si la vidange n'est pas branchée correctement en utilisant une coupure antirefoulement ou un boucle d'égout d'au moins 76 cm (30 po) de haut, l'écoulement de l'eau du lave-vaisselle n'est pas bon, ce qui peut causer des dommages ou un mauvais lavage de la vaisselle.

Method 1 – Air Gap with Waste Tee or Disposer
An air gap must be used when the waste tee or disposer connection is less than 18" from the floor.

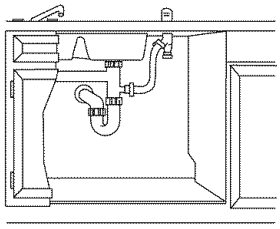

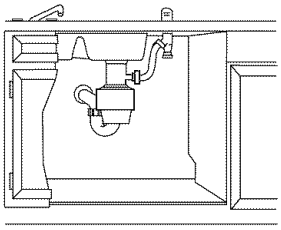

Method 2 – High Drain Loop with Waste Tee or Disposer Install waste tee or disposer and air gap according to manufacturer's instructions.

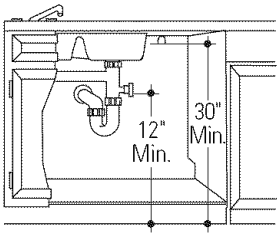

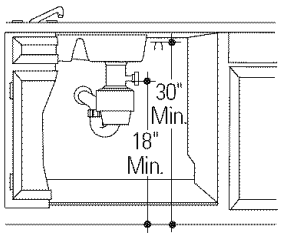

CABINET PREPARATION

- Drill a 1-1/2" dia. hole in the cabinet wall within the shaded areas shown for the drain hose connection. The hole should be smooth with no sharp edges.

PREPARE ELECTRICAL WIRING

WARNING FOR PERSONAL SAFETY: Remove house fuse or open circuit breaker before beginning installation. Do not use an extension cord or adapter plug with this appliance.

AVERTISSEMENT POUR ASSURER LA SÉCURITÉ PERSONNELLE, il faut enlever le fusible ou couper le courant au disjoncteur avant de commencer l'installation. Avec cet appareil, il ne faut pas utiliser de rallonge ni d'adaptateur de prise.

Electrical Requirements

- This appliance must be supplied with 120V, 60 Hz., and connected to an individual properly grounded branch circuit, protected by a 15 or 20 ampere circuit breaker or time delay fuse.
- Wiring must be 2 wire with ground and rated for 75°C (176°F).
- If the electrical supply does not meet the above requirements, call a licensed electrician before proceeding.

Grounding Instructions–Cable Direct

This appliance must be connected to a grounded metal permanent wiring system, or an equipment-grounding conductor must be run with the circuit conductors and be connected to the equipment-grounding terminal or lead on the appliance.

Grounding Instructions–Power Cord

This appliance must be grounded. In the event of a malfunction or breakdown, grounding will reduce the risk of electrical shock by providing a path of least resistance for electric current. The plug must be plugged into an appropriate outlet that is installed and grounded in accordance with all local codes and ordinances.

WARNING The improper connection of the equipment-grounding conductor can result in a risk of electric shock. Check with a qualified electrician or service representative if you are in doubt that the appliance is properly grounded.

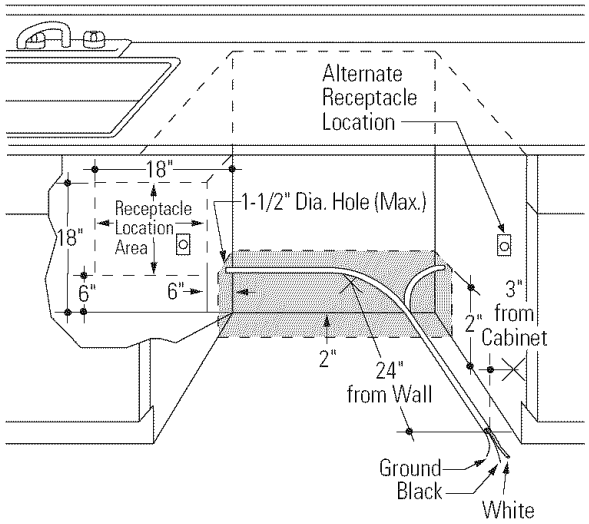

Electrical Connections to Dishwasher:

The dishwasher junction box is located on the right side at the front of the dishwasher. The electrical cable must extend forward at least 24" to reach the junction box when dishwasher is installed.

- The wiring may enter the opening from either side, rear or the floor within the shaded area.
- Cut a 1-1/2" max. dia. hole to admit the electrical cable or use the same hole cut for the drain hose. The hole must be free of sharp edges. If the cabinet wall is metal, the hole edge must be covered with a bushing.
- For power cord connections, install a 3-prong grounding type receptacle in the sink cabinet rear wall, 6" min, or 18" max. from the opening, and 6" to 18" above the floor.

AVERTISSEMENT Le mauvais branchement du fil de mise à la terre de l'équipement peut causer un choc électrique. En cas de doute sur la mise à la terre de l'appareil, consulter un électricien qualifié ou un représentant technique.

PREPARE HOT WATER LINE

The line may enter from either side, rear or floor within the shaded area shown.

- The water line may pass through the same hole as the electrical cable and drain hose. Or, cut an additional 1-1/2" dia. hole to admit the line. If a power cord with plug is used, it must pass through a separate hole.

Water Line Connection

- Turn off the water supply.
- Install a hand shut-off valve in an accessible location, such as under the sink. (Optional, but strongly recommended and may be required by local codes.)
- The hot water line should be 3/8" O.D. copper tubing or 1/2" O.D. plastic tubing. The line must extend forward at least 30" from the left side or 40" from the rear wall.
- The water line must be long enough to form a smooth natural loop with no sharp bends or kinks between the cutout entry.

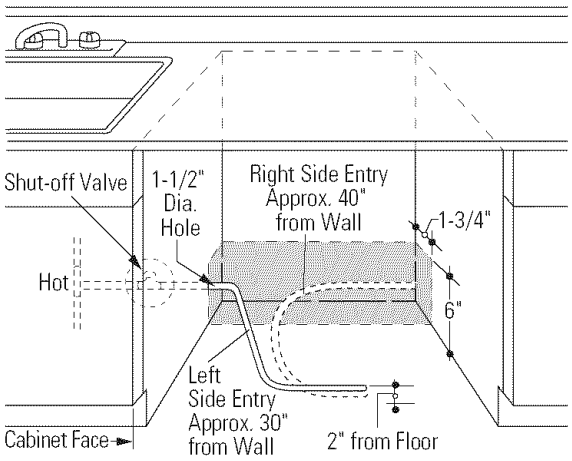

- Adjust water heater to deliver temperatures of 120°F to 150°F.
- Flush water line to clean out debris.
- The hot water supply line pressure must be 20-120 PSI.

Custom Panel Dimensions

CUSTOM PANEL FOR MODELS PDW8000

Panel kits must be ordered separately. Installation of any custom panel should be completed before the dishwasher is installed.

1/4" PANEL WITH GPF725 TRIM KIT

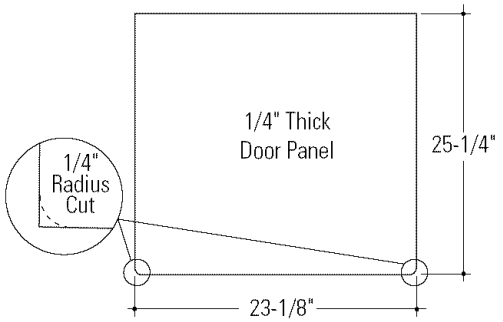

- Cut the panel to the dimensions shown.
- The bottom left and right corners should be cut at 1/4" radius. See illustration.

3/4" PANEL WITH ZPF675 TRIM KIT

The custom panel size varies depending on your installation.

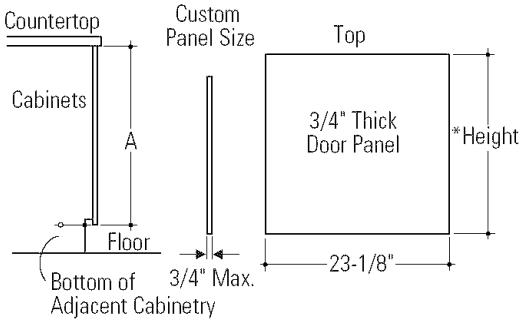

* Height is equal to A minus 5-3/8"
EXAMPLE: A = 30-1/2" minus 5-3/8" is equal to 25-1/8".

1. Measure Dimension A, from underside of countertop to bottom of adjacent cabinets.
2. Subtract 5-3/8". Control panel height is 5-1/8". Allow 1/4" clearance between countertop and control panel.
3. The custom panel fits against bottom of the control panel.

BEFORE YOU BEGIN:

CUSTOM PANEL INSTALLATION: If you intend to install custom door panels, (on some models) refer to trim kit installation instructions. Custom panels should be in place before installing the dishwasher.

STEP 1 REMOVE PACKAGING

Cut the shipping carton and use it as a pad beneath the dishwasher. This will protect the finished floor in the kitchen.

- Remove wrapping and uncoil the drain hose in the back of the dishwasher. Do not remove rear insulation blanket.
- Lay the dishwasher on it's back. Do not kink or crush the drain hose.

STEP 2 INSTALL LEVELING LEGS

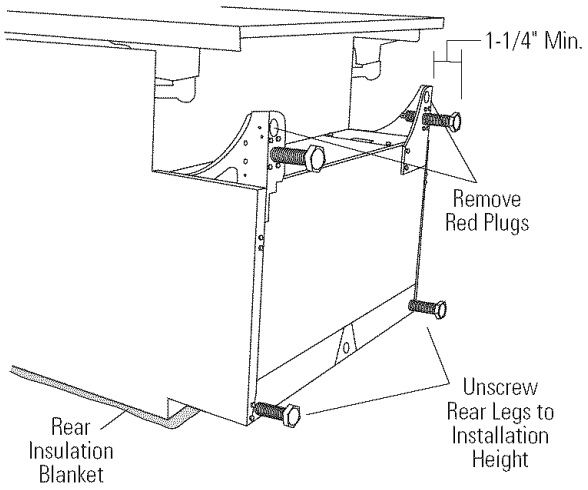

- Measure installation opening from the floor to the bottom of the countertop.
- Install the front leveling legs into holes on the brackets. Use a wrench to screw the legs in until the overall height of the dishwasher is 1/4" less than the installation opening height.

Note: Install the legs as shown, 1-1/4" min from the bottom of the bracket.

- Remove and discard the red plugs from the front holes.

STEP 3 REMOVE ACCESS COVER

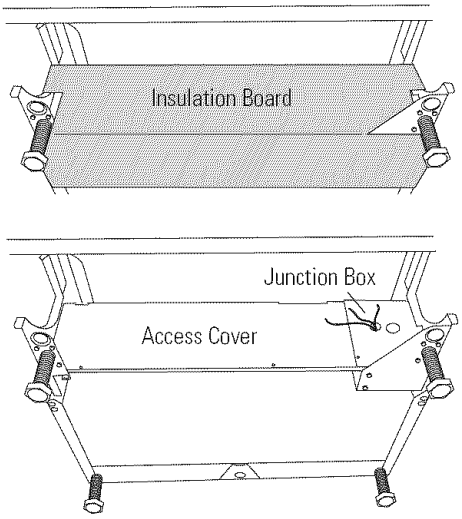

- Remove sound insulation board and the access cover plate.
- Install UL listed strain relief on junction box.

STEP 4 INSTALL 90° ELBOW

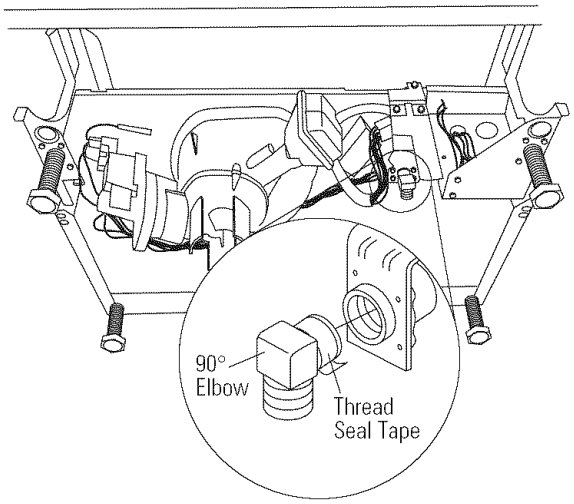

- Install the 90° elbow onto the water inlet. Use thread seal tape or pipe thread compound. Thread seal tape should be wrapped in same direction as the threads on the elbow.
- The 90° elbow should face the inlet water line.

STEP 5 INSTALL POWER CORD

SKIP THIS STEP IF DISHWASHER WILL BE DIRECT WIRED

- Maximum power cord length is 6 ft.
- The power cord and connections must comply with the National Electrical Code, Section 422 and/or local codes and ordinances.

Insert power cord wires through strain relief and tighten.

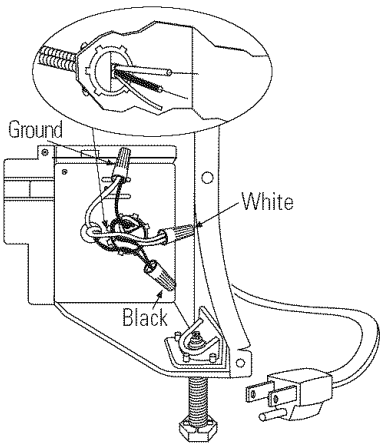

- Strip 1/2" insulation from ends of power cord wires.
- Connect incoming power cord white to dishwasher white, black to black and ground to dishwasher green wire. Use UL listed wire connectors of appropriate size.
- Install junction box cover with screws provided. Be sure wires are not pinched under the cover.

STEP 6 LEVEL DISHWASHER

- Carefully, upright the dishwasher, **be careful not to bend the leveling legs.**
- Check to be sure the dishwasher is level and is adjusted to fit the installation cutout height.

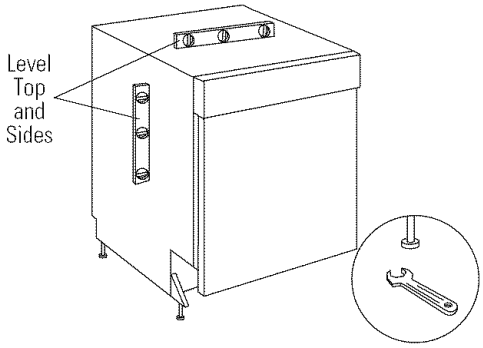

STEP 7 SLIDE DISHWASHER INTO OPENING

DO NOT PUSH AGAINST THE FRONT PANEL WITH KNEES, DAMAGE WILL OCCUR!

- Insert drain hose into the cabinet wall hole. If a power cord is used, guide the end through a separate hole.

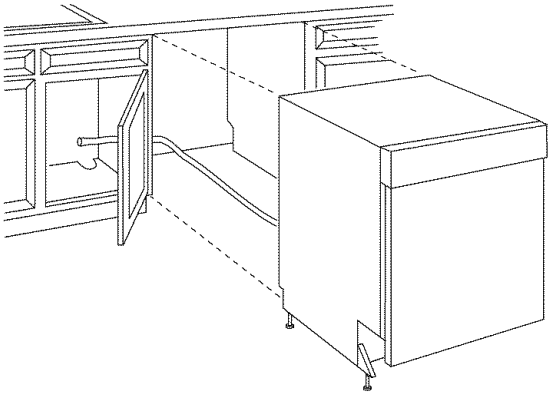

- Position water supply line and house wiring on the floor of the opening to avoid interference with base of dishwasher.
- Slide dishwasher into the opening a few inches at a time. As you proceed, pull the drain hose through the cabinet wall under the sink.
- Check to be sure there is no interference with waterline or house wiring.
- Again, check to be sure the dishwasher is level.

STEP 8 CONNECT WATER LINE

NOTE: If you are using an existing water line, cut 1" off the end. Always use a new ferrule and compression nut.

- The water supply line should be flushed to clear any foreign material before connecting to the dishwasher.
- Make sure there are no sharp bends or kinks to restrict water flow.
- Insert water line into the 90° elbow.
- Slide ferrule against elbow and secure with compression nut.
- Replace access panel plate.

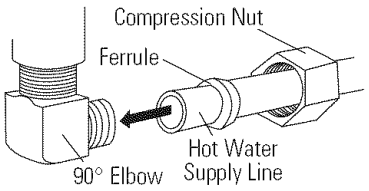

STEP 9 CONNECT DRAIN LINE

FOLLOW ALL LOCAL CODES AND ORDINANCES.

- The dishwasher is supplied with a 72" long drain hose.
- If a longer drain hose is required, add up to 48" of length for a total of 10 ft. length.
- Secure the drain hose to the air gap, waste tee or disposer with clamps.
- Make sure drain hose is not kinked.

IMPORTANT: When connecting drain line to disposer, check to be sure that drain plug has been removed. DISHWASHER WILL NOT DRAIN IF PLUG IS LEFT IN PLACE.

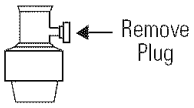

Method 1 – Air gap with waste tee or disposer

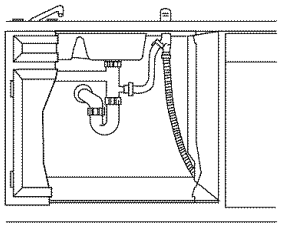

Waste Tee Installation

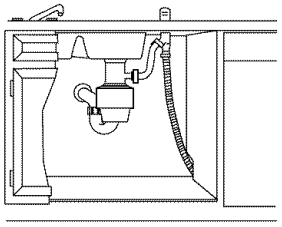

Disposer Installation

Method 2 – High drain loop with waste tee or disposer
Waste Tee Installation

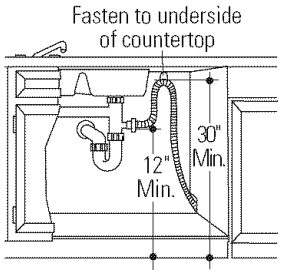

Waste Tee Installation

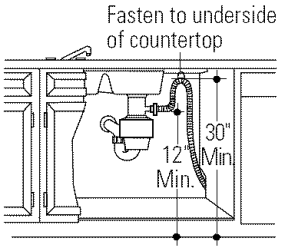

Disposer Installation

STEP 10 CONNECT ELECTRICAL

FOR DIRECT WIRE ONLY
(If a power cord with plug is used, plug it into the wall outlet and continue with next step.)

Verify that power is turned off at the source.

Insert power cord wires through strain relief and tighten.

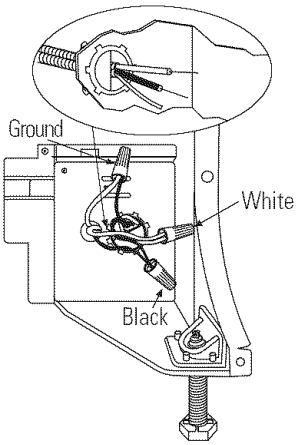

- Locate the three dishwasher wires, (white, black and green) with stripped ends. Insert wire through the small hole in the junction box. Use wire connectors to connect incoming ground to green, white to white and black to black.
- Install junction box cover with screws provided. Check to be sure that wires are not pinched under the cover.
- Reinstall Insulation Board in position. The board should be secured so it does not interfere with door opening.

If house wiring is not 2-wire with ground, a ground must be provided by the installer. When house wiring is aluminum, be sure to use UL Listed anti-oxidant compound and aluminum-to-copper connectors.

Si l'installation électrique de la maison n'est pas à deux fils plus terre, l'installateur doit installer un fil de mise à la terre. Si l'installation électrique de la maison est en aluminium, il faut prendre soin d'utiliser des composés antioxydants et des connecteurs aluminium à cuivre sur la liste UL.

STEP 11 POSITION AND LEVEL THE DISHWASHER

- Check to be sure the dishwasher is adjusted to correct height and is centered in the cutout.
- Open and close the door to insure proper operation of the door. If there is any binding or rubbing, readjust leveling legs.

Use a wrench to make adjustments.
- If the door rubs on the right side of the cabinet, extend the left rear leg by unscrewing it one quarter turn.
- If the door rubs against the left side of the cabinet, extend the right rear leg by unscrewing it one quarter turn.
- Check level again. Repeat the procedure if necessary.

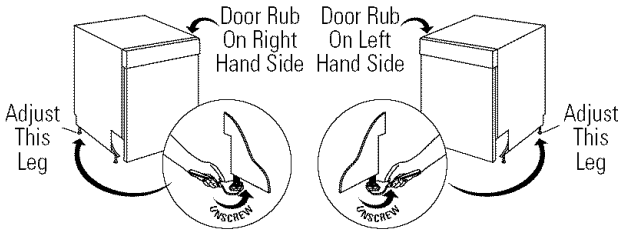

STEP 12 PRE-TEST CHECK LIST

Installation service calls are not covered by your warranty. To avoid unnecessary charges, review this list carefully.

☐ Check to be sure power is OFF.
☐ Open the door and remove all foam and paper packaging.
☐ Pull lower rack out, about half way. Check to be sure it does not roll back or forwards on the door. If the rack moves, adjust leveling legs.
☐ Verify water supply and drain lines are not kinked or in contact with other components.
☐ Turn on the sink hot water faucet and verify water temperature. Incoming water temperature must be between 120°F and 150°F. 120°F min. temperature is required for best wash performance.
☐ Turn on water supply.
☐ Open the door. Check to be sure Insulation Board does not interfere with door opening.

STEP 13 DISHWASHER WET TEST

☐ Turn on power supply.
☐ Select the normal cycle and press the start button.
☐ The control will indicate a slow/no fill by flashing the CHINA CRYSTAL, LIGHT WASH OR WASH CYCLE light. Check water supply, then adjust fill time according to the chart shown.
☐ Check to be sure that water enters the dishwasher, wait up to 2 minutes. If water does not enter the dishwasher, check to be sure that water is turned on.
☐ Check for leaks under the dishwasher. If a leak is found, turn power and water off, then tighten connections. Restore power and water supply.
☐ Check for leaks around the door. A leak around the door could be caused by door rubbing or hitting against adjacent cabinetry. Reposition the dishwasher if necessary.
☐ After the dishwasher drains check drain lines. If leaks are found, turn power off, correct as necessary.
☐ The control will indicate a slow/no drain by flashing the RINSE ONLY, SANI WASH or HEAT OPTIONS. Check that the airgap is clear of debris and that the knockout in the disposer or waste tee is fully removed. Check that the drain hose is not kinked.
☐ Open the dishwasher door and make sure that most of the water has drained. If not, check that disposer plug has been removed and that air gap is not plugged.
☐ Cancel the dishwasher cycle and complete the installation.
☐ Remove protective film if present from the control panel and door.

CHECK WATER FILL LEVEL

For best performance, check the water fill level.
Run through a complete RINSE ONLY cycle to ensure it is emptying and filling correctly. For low water pressure situations run the RINSE ONLY cycle 3 times. Half-way through the final RINSE ONLY cycle, pause the dishwasher and check the water level inside the dishwasher. If the water level is not above the minimum water level (marked on the lower spray support tower), increase the fill level.

1. Ensure the dishwasher is not running through a cycle. Depress the WATER TEMP button for 10 seconds until the second buzzer sounds (except on ZBD6600).
2. Press the START/CANCEL button to select fill time, as per chart (65 seconds is the factory setting).
3. To test time, press DELAY START. The dishwasher will start filling. Listen for the dishwasher to complete filling. Once filled, the fill level must be checked to ensure fill time is correct.
4. Once complete, press the WATER TEMP button to exit fill time mode.

Continue to press the START/CANCEL button until the desired indicator is illuminated.

Cycle Statue Indicators	Fill Time
SENSING	60 seconds
WASHING	65 seconds
RINSING	70 seconds
DRYING	80 seconds
CLEAN	90 seconds

STEP 14 SECURE DISHWASHER TO CABINET AND COUNTERTOP

To maintain position and alignment, it is recommended the dishwasher be secured to the countertop and adjacent cabinets.

Secure dishwasher to countertop:

- Drill pilot holes through the mounting bracket and into the underside of the countertop. Secure with screws A provided.

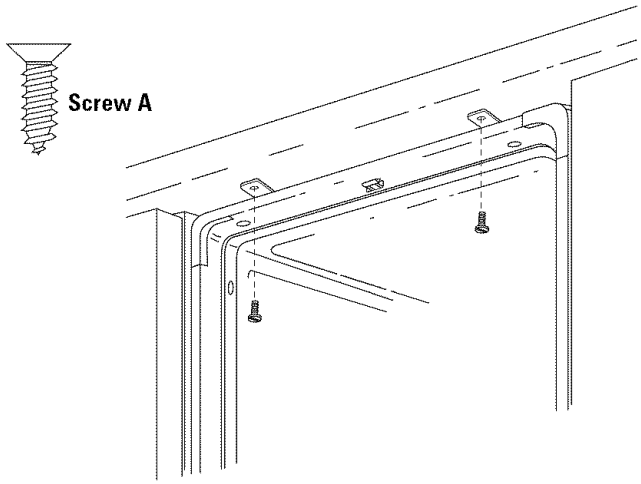

IMPORTANT: To avoid damage to your dishwasher, drive screws straight and flush. Protruding screw heads may scratch the top of the escutcheon or door and can interfere with door closing.

Secure dishwasher to adjacent cabinets:

- Remove plastic plugs button on the inside of the dishwasher frame. One on each side.
- Drill pilot holes through the dishwasher holes and into the adjacent cabinets. Install screws B provided.
- Replace plastic plug buttons.

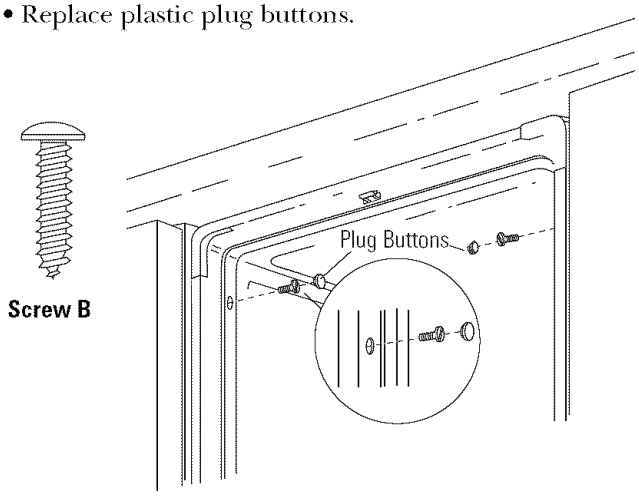

STEP 15 INSTALL TOEKICK

- Loosen depth adjustment screws inside the bracket.
- Slide bracket out to proper depth. Tighten screws.
- Attach supplied toekick to brackets with screws C provided. Do not tighten.
- Adjust the toekick to touch the floor. Tighten screws.

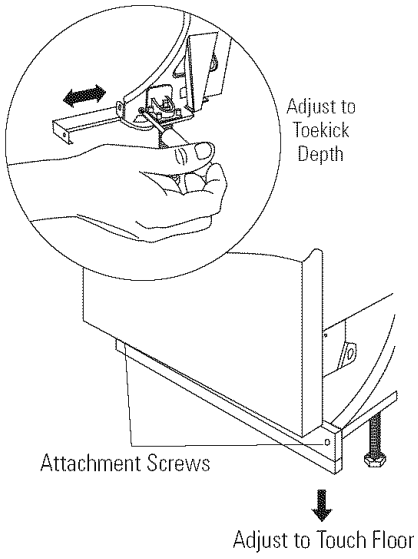

STEP 16 ADJUST SIDE FILLER STRIPS

- Open the door fully.
- Loosen (but do not remove) screws holding the top and side trims.
- Adjust trim to cover opening gap. Tighten screws.

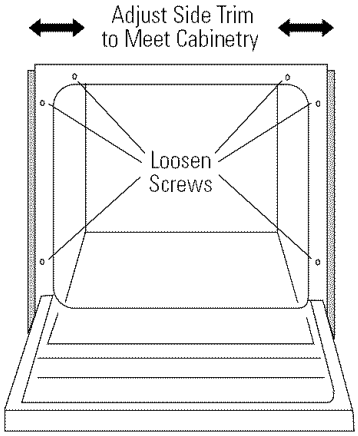

Note: While performing installations described in this book, safety glasses or goggles should be worn.

Note: Product improvement is a continuing endeavor at General Electric. Therefore, materials, appearance and specifications are subject to change without notice.

0616 400 350
Pub. No. 31-30545
Dwg. No. 203C1559P085

(N.D. 318) 11/01