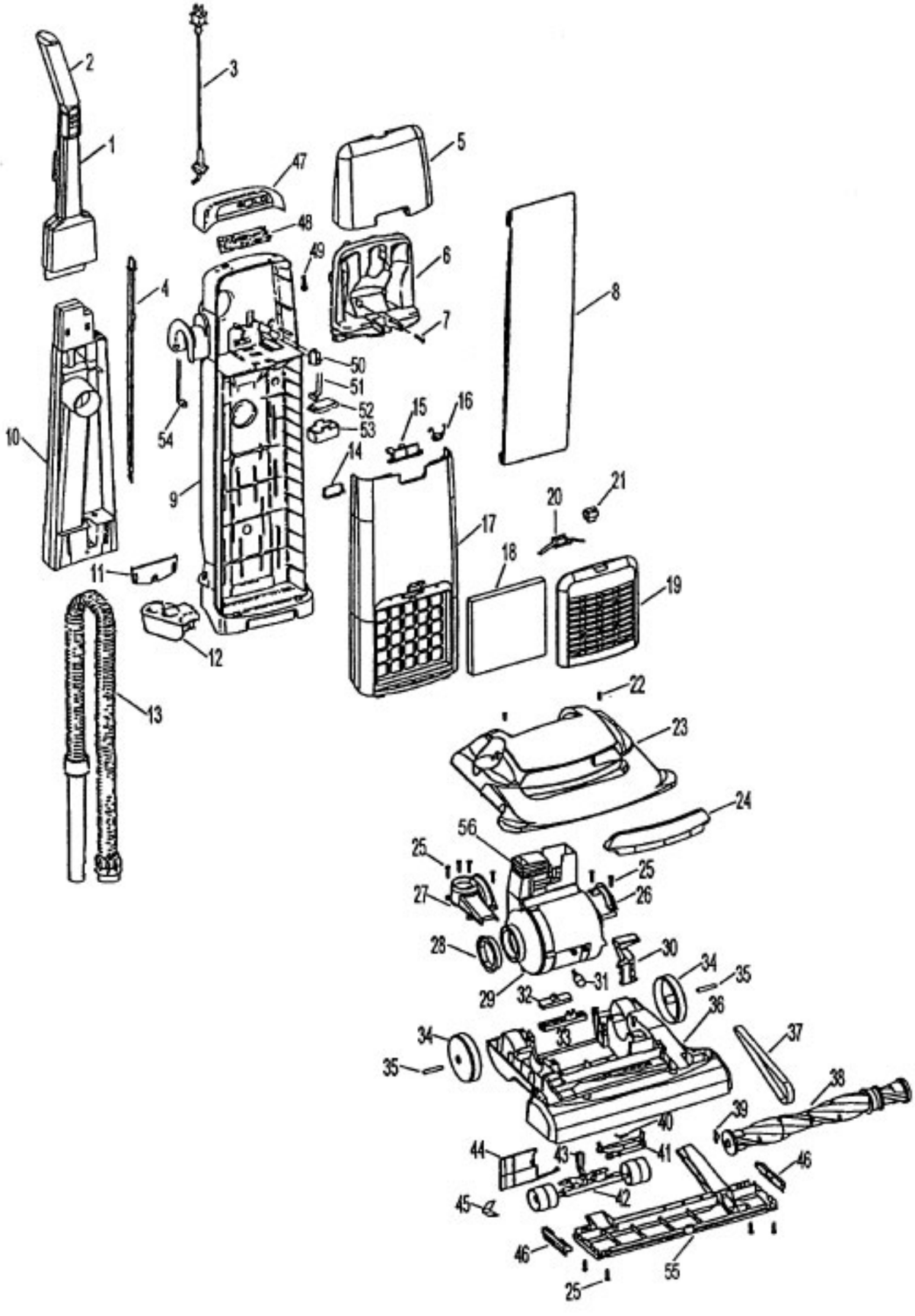
1
2
3
4
5
6
7
8
9
10
11
12
13
14
15
16
17
18
19
20
21
22
23
24
25
26
27
28
29
30
31
32
33
34
35
36
37
38
39
40
41
42
43
44
45
46
47
48
49
50
51
52
53
54
55
56

Ref. No.	Part No.	Description
1.	48663204	Upper Handle Assembly
2.	37911078	Handle Cap
3.	46388027	Cord Assembly - 35 Ft.
4.	38458046	Switch Rod - Lower
5.	37257147	Tool Door
6.	36433125	Tool Holder
7.	21447220	Screw - Tool Holder
8.	4010100Z	T.A.B - 3 pk. - Microfiltration
9.	42253181	Bag Housing (Inc. item 12)
10.	39464025	Lower Handle
11.	36425081	Bag Housing Bracket
12.	36433113	Lower Hose Support
13.	43434101	Hose Assembly
	32286025	Hose Adapter - Long
	38638064	Hose Connector
14.	37258051	Latch Plug
15.	36151013	Bag Door Latch
16.	38355008	Spring
17.	37254130	Bag Hsg. Door(Inc. items 14,15,16)
18.	40110003	Final Filter
19.	37257230	Filter Retainer - (Inc. items 20,21)
20.	36151025	Latch
21.	38426088	Latch Button
22.	21447218	Screw - Hood (4)
23.	42252A22	Hood Assembly (Inc. item 24)
24.	39383108	Lens
25.	21447217	Screw (10)
26.	36131090	Motor Retainer Cap - LH
27.	38656033	Duct Cover
28.	38784016	Seal
29.	43576204	Motor Assembly (P. 202)
30.	38458053	Handle Release Lever
31.	27313101	Bulb
32.	38567014	Indicator Knob
33.	38567027	Cam Actuator
34.	38522011	Rear Wheel (2)
35.	31523012	Rear Wheel Shaft (2)
36.	37241160	Main Body (Inc. items 34,35)
37.	38528027	Agitator Belt
38.	48414061	Agitator Assembly
39.	13261AY	Rug Nozzle Rib Shoe
40.	38351012	Spring
41.	38563013	Nozzle Height Adjustment Cam
42.	43248058	Front Wheel Assem. (Inc. item 43)
43.	38452089	Lever (Use wheel assem. 43248054)
44.	38718005	Valve Gate
45.	34572002	Cam Actuator Spring
46.	39511004	Litter Picker (2)

Ref. No.	Part No.	Description
47.	37943019	Housing
	27352030	Snap In Lens - Red
	27352031	Snap In Lens - Green
	51371027	Housing Nameplate
48.	46851029	Printed Circuit Board Assembly
49.	21447217	Screw - EDF Housing (2)
50.	28161063	Switch
51.	46515011	Battery Connector Assembly
52.	N/A	9 Volt Battery
53.	37248010	Battery Cover
54.	47823001	Microphone Connector Assem.
55.	37245034	Bottomplate
56.	38783020	Duct Seal

Items Not Illustrated

40201085	Nut and Bolt Assem. (Handle)

Tools

38634078	Extension Tube
38614036	Furniture Nozzle
38617026	Crevice Tool
43414146	Dusting Brush

Note: In October 1999, the extra bag and belt were removed from this unit.

Packaging

56511A53	Owner Manual
58185196	Carton
58366101	Hard Bag Support
58369067	Cleaner Support