This Owner's Manual is provided and hosted by Appliance Factory Parts.

Appliance Factory Parts
Experts in BBQ, Humidifier, & Appliance Parts
1-800-955-7075

PANASONIC MC-5217 Owner's Manual

Shop genuine replacement parts for PANASONIC MC-5217

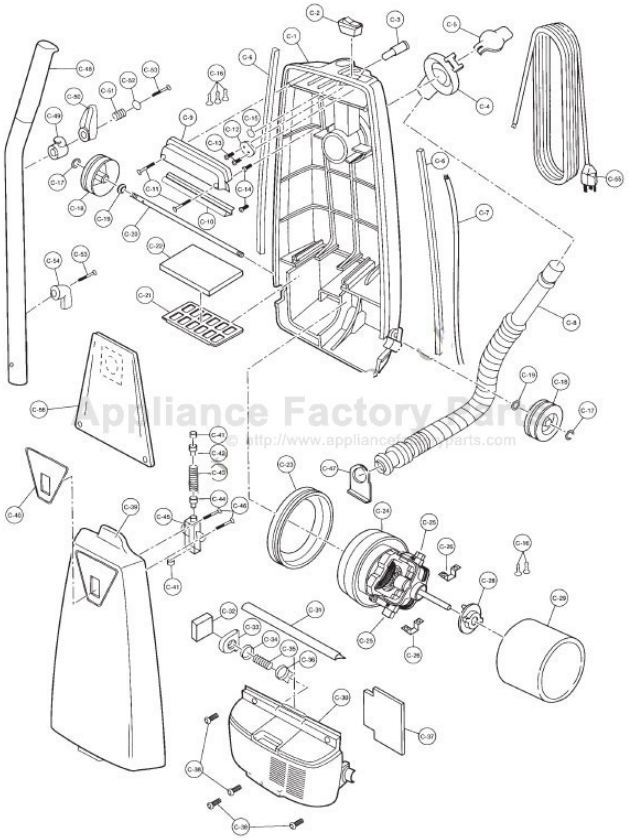

Find Your PANASONIC Vacuum Cleaner Parts - Select From 665 Models

-------- Manual continues below part list --------

Available Replacement Parts for PANASONIC MC-5217

PR-1804	FILTER SECOONDARY AFTERMARKET 1 PACK
PR-14005	PANASONIC TYPE U DVC PAPER BAGS 3PK
P-77020	Screw.
PR-1015	BELT, FLAT, UPRIGHTS, 1 PACK
PR-1016	BELT, PANASONIC (2 PACK)
AMC32K-V00	SUPPORT, FILTER

PANASONIC Original & Replacement

Model 5217, 5240, 5250, 5255, 5267

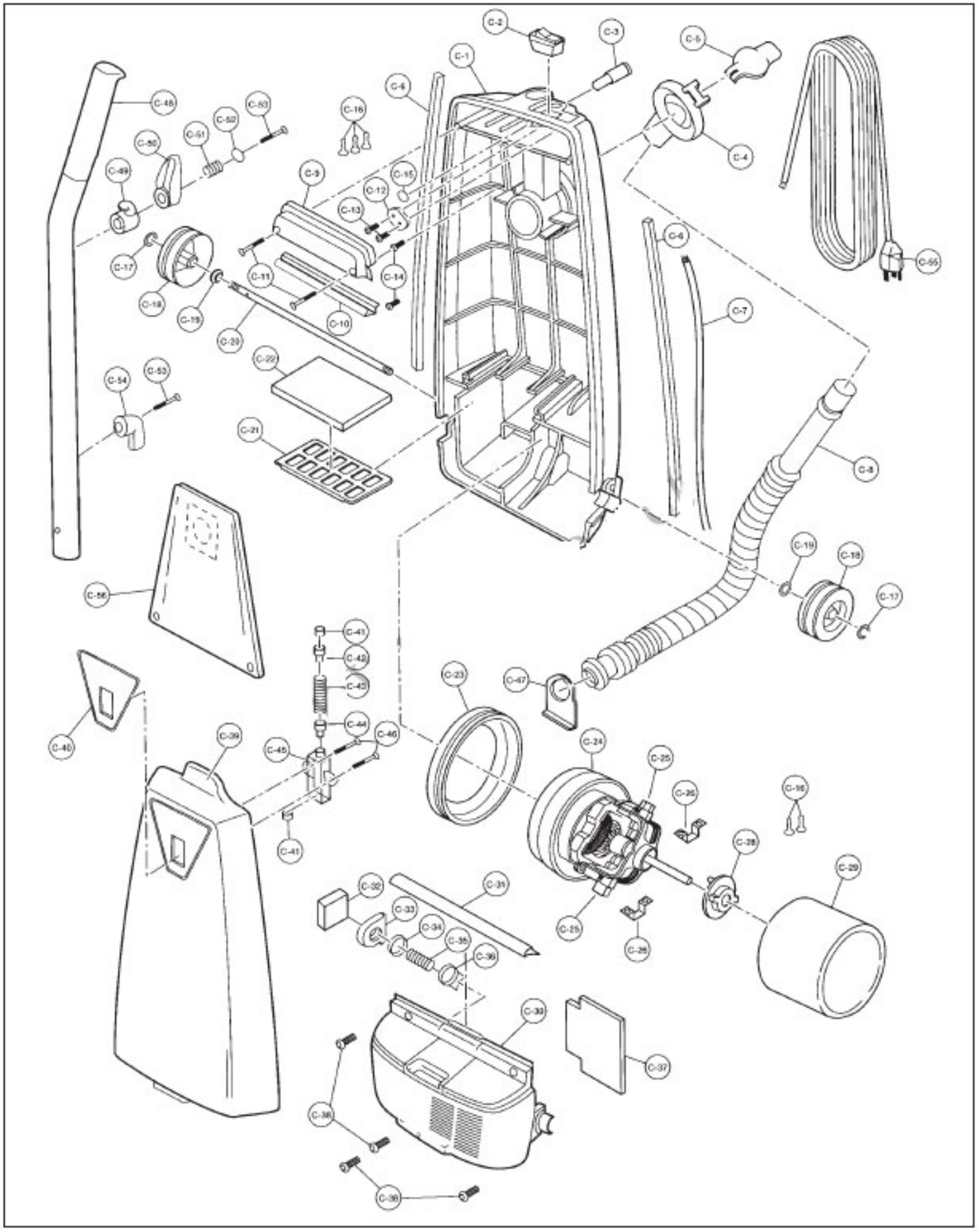

Original & Replacement **PANASONIC**

Model 5217, 5240, 5250, 5255, 5267

PARTS LIST (MOTOR HOUSING, MOTOR, HANDLE, BODY)

KEY	PART NO.	DESCRIPTION
C-1	P-75229	Dust Compartment, 5217
C-1	P-75220	Dust Compartment, 5240
C-1	P-75230	Dust Compartment, 5250
C-1	P-75250	Dust Compartment, 5255
C-1	NLA	Dust Compartment, 5267
C-2	P-34100	ON/OFF Switch
C-2	**HR-3415**	**Switch, 1 Speed Rocker Type**
C-3	P-77043	Handle Screw
C-4	P-F70E	Suction Inlet, 5217
C-4	P-75640	Suction Inlet, 5240
C-4	P-60HF72RU06	Suction Inlet, 5250
C-4	P-60HF72RU09	Suction Inlet, 5255
C-4	NLA	Suction Inlet, 5267
C-5	P-75690	Cover, 5217
C-5	P-75640	Cover, 5240
C-5	P-75642	Cover, 5250
C-5	P-75610	Cover, 5255
C-5	P-02HF71G004	Cover, 5267
C-6	P-66K-V00	Rubber Gasket, 5217
C-6	P-66KV01KU12	Rubber Gasket, 5240/5267
C-6	P-66KV01KU13	Rubber Gasket, 5250/5255
C-7	P-37G-V200U	Wire Cord
C-8	NLA	Nozzle Hose, 5217
C-8	P-73625	Nozzle Hose, 5240
C-8	P-73635	Nozzle Hose, 5250
C-8	P-73620	Nozzle Hose, 5255
C-8	P-73628	Nozzle Hose, 5267
C-9	P-03E-V00Q	Switch Cover, 5217
C-9	P-03EV02UU01	Switch Cover, 5240
C-9	P-03EV02RU06	Switch Cover, 5250
C-9	P-03EV02RU09	Switch Cover, 5255
C-9	P-03EXYZG004	Switch Cover, 5267
C-10	P-73K-V00	Switch Cover Packing, 5217
C-10	P-73KV0ZKU12	Switch Cover Packing, 52255267
C-10	P-73KV0ZKU13	Switch Cover Packing, 5255255
C-11	P-77020	Screw (Switch Cover)
C-12	P-62E-J20	Cord Stopper
C-13	P-77020	Screw (Cord Stp Scr)
C-14	P-77020	Screw (Suction Inlet)
C-15	P-AMP21B170	Nut
C-16	**SS-3270**	**Wire Nut**
C-17	P-77115	E-Clip (Roller Shaft)
C-18	P-71125	Roller (Wheel), 5217/5240/5267/5250/5255
C-19	P-XWG6E115FY	Washer
C-20	P-71350	Roller Shaft
C-21	P-18420	Filter Supporter
C-22	P-18400	Filter, Secondary
C-22	**PR-1800**	**Filter, Secondary**
C-23	P-76768	Motor Supporter (Rubber Front)
C-24	P-60100	Motor Assembly
C-25	P-63050	Carbon Brush, USA Motor
C-25	P-63000	Carbon Brush, Non USA Motor
C-26	P-02D-V300U	Brush Retainer Bracket
C-27	P-40D-V300U	Screw (Brush), Not Illustrated
C-28	P-76769	Motor Support (Rubber Rear)
C-29	P-18706	Noise Suppressor
C-30	P-75033	Motor Case, 5217
C-30	NLA	Motor Case, 5240
C-30	P-75035	Motor Case, 5250
C-30	P-75015	Motor Case, 5255
C-30	P-75110	Motor Case, 5267
C-31	P-19F-V00	Motor Case Packing, 5217
C-31	P-19FV0ZKU12	Motor Case Packing, 5240/5267
C-31	P-19FV0ZKU13	Motor Case Packing, 5250/5255
C-32	P-33K-V000U	Protector Filter
C-33	P-50520	Protector Supporter
C-34	P-50521	Protector
C-35	P-76865	Protector Spring
C-36	P-68K-D20	Protector Case
C-37	P-76850	Rear Cover Packing
C-38	P-77020	Screw (Motor Case)
C-39	P-60K-BF0RU	Dust Cover, 5217
C-39	P-78515	Dust Cover, 5240
C-39	P-60K2CZRU06	Dust Cover, 5250
C-39	P-60K2EZRU09	Dust Cover, 5255
C-39	P-60KXZZG004	Dust Cover, 5267
C-40	P-21TBF00U	Ornamental Plate, 5217
C-40	P-21T-ZPU	Ornamental Plate, 5240
C-40	P-21T-ZMU	Ornamental Plate, 5250
C-40	P-11M-ZNU	Vac Gauge Plate, 5255
C-40	P-11MXYZ0U00	Vac Gauge Plate, 5267
C-41	P-09M-V30	Indicator Packing, 5255/5267
C-42	P-17MX24	Indicator Cap, 5255/5267
C-43	P-04M-V20	Indicator Spring, 5255/5267
C-44	P-11MX13Z0	Indicator Lead, 5255/5267
C-45	P-09M-V20	Indicator Body, 5255/5267
C-48	P-09M4+10B	Screw (Indicator), 5255/5267
C-43	P-73840	Hose Supporter
C-44	P-70124	Handle, 5217
C-48	P-70120	Handle, 5240
C-48	P-70122	Handle, 5250
C-48	P-70110	Handle, 5255
C-48	P-64B-V20L	Handle, 5267
C-49	NLA	Cord Base, 5217
C-49	P-70925	Cord Base, 5240
C-49	P-55EV0ZRU06	Cord Base, 5250
C-49	P-70922	Cord Base, 5255
C-49	P-55E-V007	Cord Base, 5267
C-50	P-53E-V00Q	Upper Cord Hook, 5217
C-50	NLA	Upper Cord Hook, 5240
C-50	P-70816	Upper Cord Hook, 5250
C-50	P-70818	Upper Cord Hook, 5255
C-50	P-53E-V007	Upper Cord Hook, 5267
C-51	P-77200	Cord Hook Spring
C-52	P-77120	Washer
C-53	P-77040	Screw (Cord Storage Hook)
C-54	P-54E-V00Q	Lower Cord Hook, 5217
C-54	P-70867	Lower Cord Hook, 5240
C-54	P-70865	Lower Cord Hook, 5250
C-54	P-70870	Lower Cord Hook, 5255
C-54	P-54E-V007	Lower Cord Hook, 5267
C-55	NLA	Power Cord, 5217
C-55	P-97E-ZPZVU	Power Cord (Gray), 5240/5267
C-55	P-97E-ZRZOU	Power Cord (Gray), 5250
C-55	P-97E-ZNZOU	Power Cord (Gray), 5255
C-56	P-MC115P	Dust Bag (Paper)
C-56	**PR-14005**	**Paper Bag Type U 3 Pk**

PANASONIC Original & Replacement

Model 5217, 5240, 5250, 5255, 5267

PARTS LIST (NOZZLE HOUSING)

KEY	PART NO.	DESCRIPTION
A-1	NLA	Nozzle Housing, 5217
A-1	P-73058	Nozzle Housing, 5240
A-1	NLA	Nozzle Housing, 5250
A-1	P-73065	Nozzle Housing, 5255
A-1	NLA	Nozzle Housing, 5267
A-2	P-21H-2V0R	Window, 5217
A-2	P-75814	Window, 5240-5267
A-3	P-73900	Plastic Shaft
A-4	P-74016	Furniture Guard, 5217
A-4	P-10A-2V0K	Furniture Guard, 5240/5267
A-4	P-74020	Furniture Guard, 5250
A-4	P-74022	Furniture Guard, 5255
A-5	P-68A-V30	Screw – (Latch Hook)
A-6	P-76425	Tight Packing
A-7	P-73421	Frame
A-8	P-73728	Pedal (Black)
A-9	P-73425	Belt Cover
A-10	P-73742	Pedal Shaft
A-11	P-77110	E-Clip
A-12	P-77020	Screw (For Frame)
A-13	P-77206	Pedal Spring
A-14	P-77110	E-Clip
A-15	P-77030	Screw (Spacer)
A-16	P-72070	Spacer
A-17	P-77020	Screw (Pedal Shaft)
A-18	P-MC210B	Belt
A-18	**PR-1015**	**Belt, UB Style**
A-19	P-76435	Agitator Holder
A-20	P-38G-V200U	Lead Wire, 5240-5267
A-21	P-58E-V30	Wire Bushing, 5240-5267
A-22	P-85H-2X0	Bulb Supporter, 5240-5267
A-23	P-93H-F800U	Lamp Holder, 5240-5267
A-24	**FA-3500**	**Bulb, 25 Watt, 5240-5267**
A-25	P-77020	Screw (Bulb Supporter)
A-26	P-XYN3+C6FYS	Screw (Lamp Holder)
A-27	P-76017	Lower Plate Ass'v
A-28	P-76107	Packing (Lower Plate Rear)
A-29	P-39A-2V0	Packing (Lower Plate Right)
A-30	NLA	Lower Plate
A-31	P-76870	Stop Latch Spring
A-32	P-76415	Latch
A-33	**SS-3270**	**Wire Nut, 5240-5255**

EXPLODED VIEW (AGITATOR ASSEMBLY)

KEY	PART NO.	DESCRIPTION
	NLA	Agitator Unit 5217/67
	PR-2000	**Agitator Unit 5217/67**
B-1	P-20020	Agitator Unit, 5240/50/55
B-2	P-20525	End Cap "A"
B-3	P-20535	End Cap "B"
B-4	P-681-424	Washer

MOTOR PARTS LIST
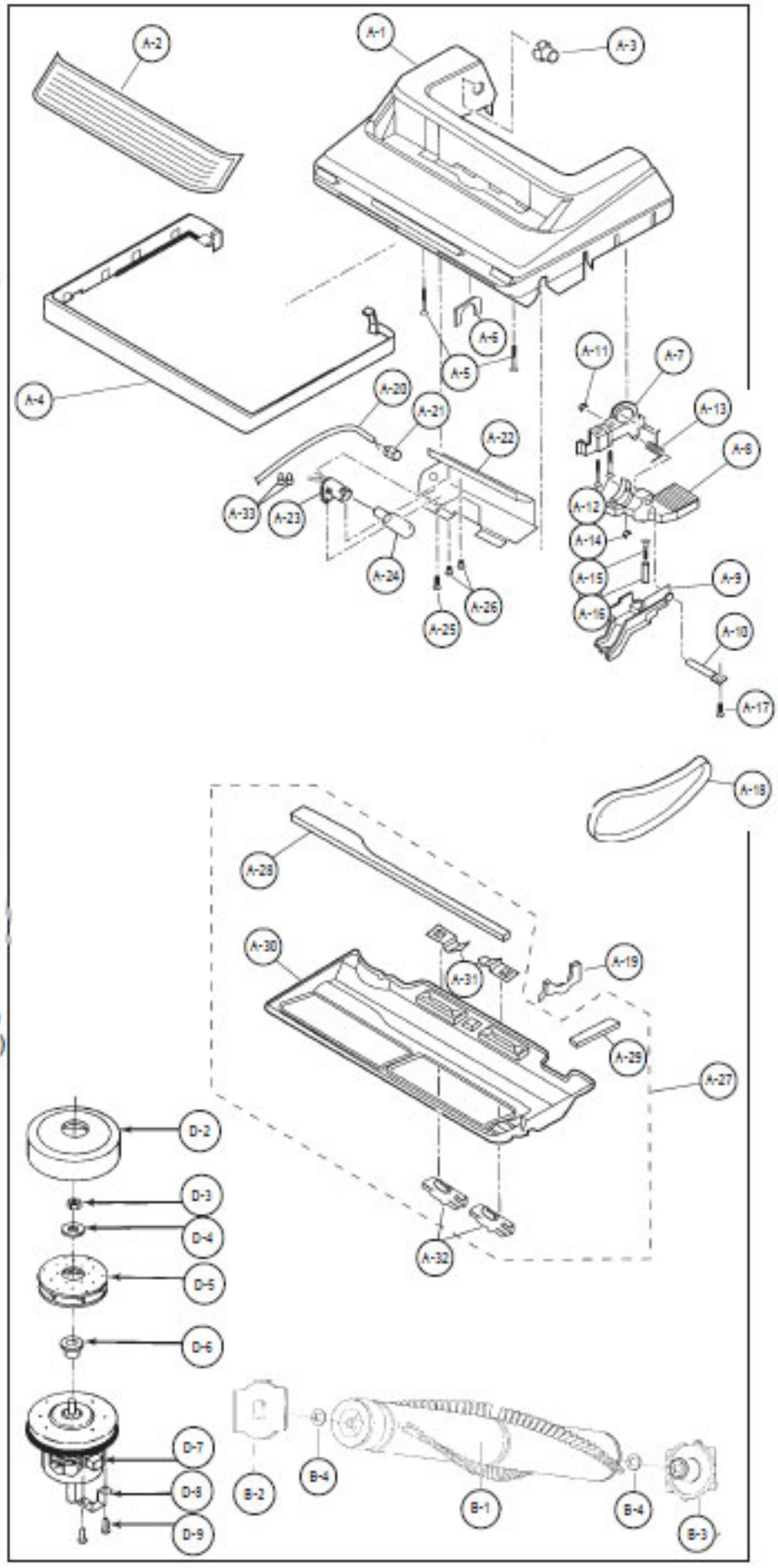
KEY	PART NO.	DESCRIPTION
D-2	P-53F-AV00U	Fan Case
D-3	P-33F-AC00U	Nut
D-4	P-62F-AV00U	Washer
D-5	P-28525	Fan
D-6	P-60F-AV00U	Spacer
D-7	P-63050	Brush Ass'y
D-8	P-02D-V300U	Bracket
D-9	P-40D-V300U	Screw