This Owner's Manual is provided and hosted by Appliance Factory Parts.

Appliance Factory Parts
Experts in BBQ, Humidifier, & Appliance Parts
1-800-955-7075

Royal 084610
Owner's Manual

Shop genuine replacement parts for Royal 084610

Find Your Royal Vacuum Cleaner Parts - Select From 772 Models

-------- Manual continues below --------

Dirt Devil

dynamite BAGLESS QUICKVAC

dynamite Plus BAGLESS QUICKVAC

MODEL NO.

084600
084605
08461 oRED
084611 BLUE
084612GREEN
084613SILVER
084650(X)

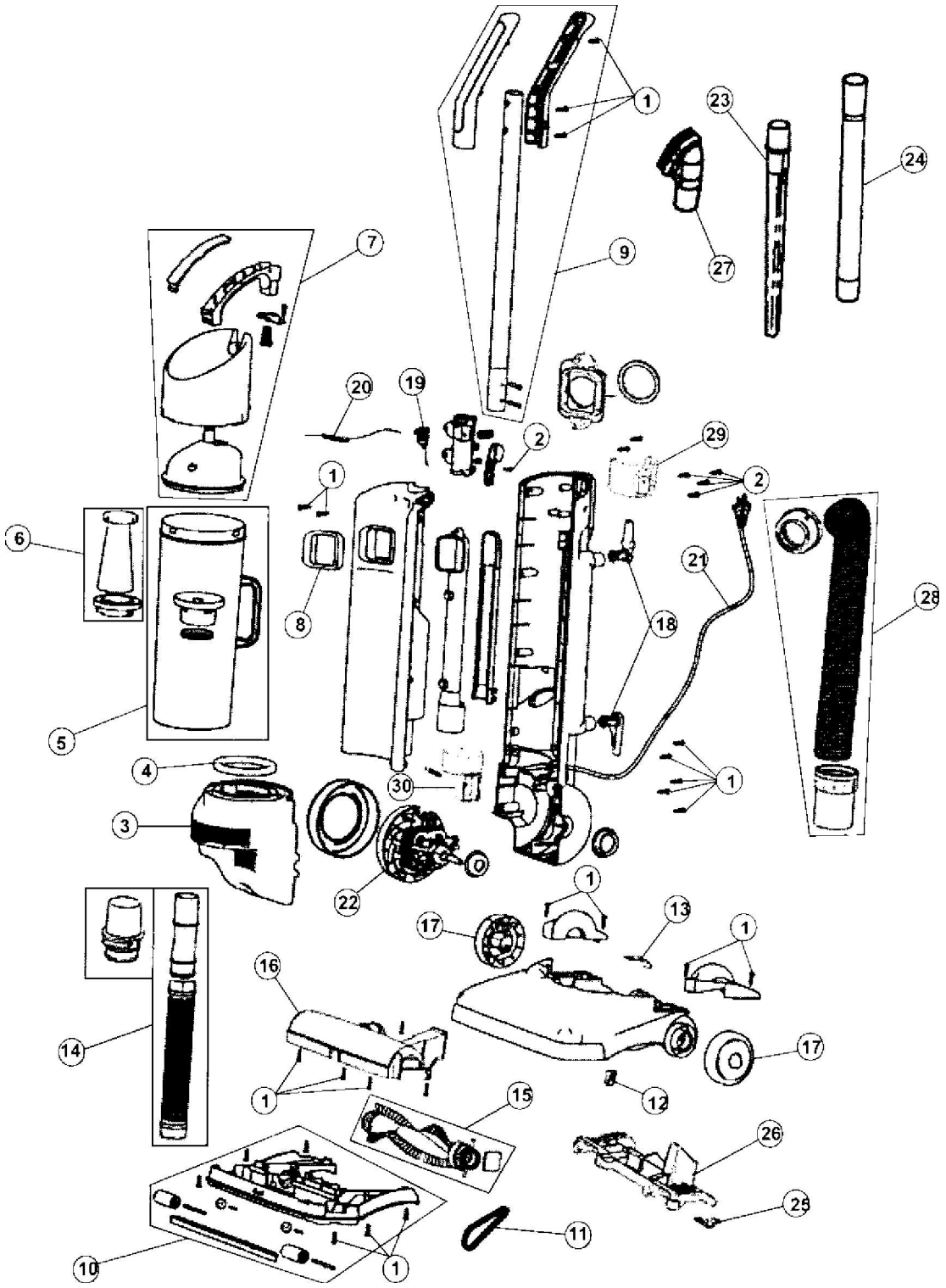

Dirt Devil

dynamite BAGLESS QUICKVAC

dynamite plus BAGLESS QUICKVAC

MODEL NO.

084600
084605
08461 ORED
084611 BLUE
084612GREEN
084613SILVER
084650(X)

Item	Part Number	Models To Fit	Part Description
1	1720430000	ALL	BODY SCREW
2	1SN0075000	ALL	HANDLE TUBE SCREW 4X10
3	1SN0010000	084600, 084605, 084610	MOTOR HOUSING
	1SN1010000	084650	MOTOR HOUSING
4	1SN0045600	ALL	MOTOR INLET GASKET
5	2SN0125Q00	ALL	DIRT CUP ASSEMBLY
6	3SFA11500X	ALL	F2 / FILTER ASSEMBLY
7	2SN0110000	ALL	DIRT CUP LID ASSEMBLY
8	1SN0050600	ALL	DIRT CUP INLET GASKET
9	2SN0170000	ALL	HANDLE ASSEMBLY
10	2SN0205600	084600, 084605, 084610	NOZZLE GUARD ASSEMBLY
	2SN1205600	084650	NOZZLE GUARD ASSEMBLY
11	1SN0220001	ALL	STYLE 15 BELT
12	1720380000	ALL	BELT CLIP GUIDE
13	1SN0245000	084600, 084605, 084610	SPRING PLATE
	1SN1240000	084650	SPRING PLATE
14	2SN0250600	084600, 084605, 084610	LOWER HOSE ASSEMBLY
	2SN0250QOO	084650	LOWER HOSE ASSEMBLY
15	2SN0275000	ALL	BRUSH ROLL ASSEMBLY
16	1SN0255600	ALL	BRUSH ROLL COVER
17	1SN0240600	ALL	REAR WHEEL
18	1SN0090000	084600, 084605, 084610	CORD HOOK
	1SN0330000	084650	CORD HOOK
19	1SN0100000	ALL	ROCKER SWITCH
20	1SN0340000	ALL	FUSE
21	1SN0105000	ALL	POWER CORD 30'
22	2SN0085000	ALL	MOTOR
23	1SN0112000	084650	CREVICE TOOL
24	1SN0110000	084650	EXTENSION WAND
25	1SN1235000	084650	LIFTER PLATE
26	2SN1210000	084650	ROLLER LIFTER ASSEMBLY
27	1SN0114000	084650	UPHOLSTERY TOOL
28	2SN1075000	084650	UPPER HOSE ASSEMBLY
29	1SN0113000	084650	UPPER WAND HOLDER
30	1SN0115000	084650	LOWER WAND CUP