This Owner's Manual is provided and hosted by Appliance Factory Parts.

Appliance Factory Parts
Experts in BBQ, Humidifier, & Appliance Parts
1-800-955-7075

Royal 086330
Owner's Manual

Shop genuine replacement parts for Royal 086330

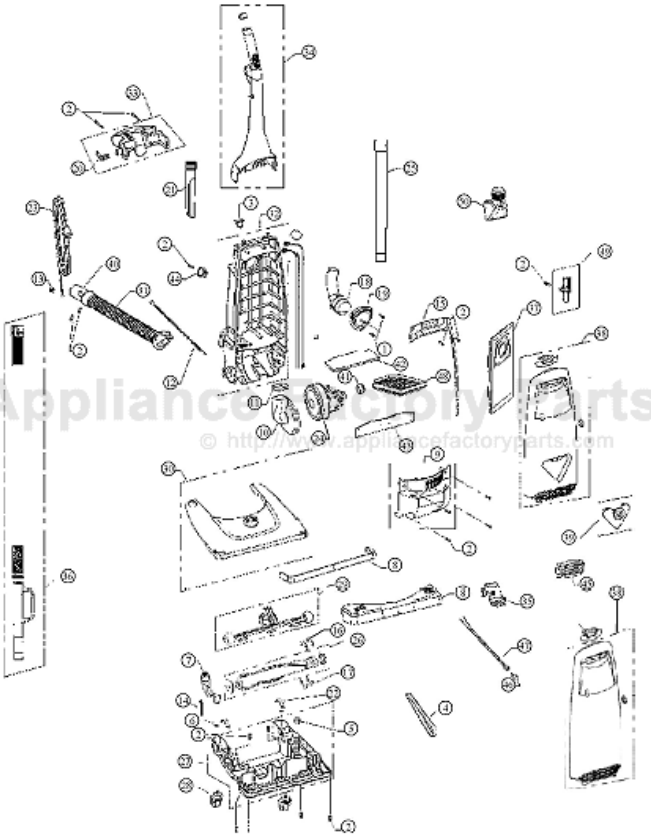

Find Your Royal Vacuum Cleaner Parts - Select From 772 Models

-------- Manual continues below --------

Dirt Devil

SWIVEL GLIDE

SWIVEL ULTRA GLIDE

SG

Model No.

086310
086315
086321
086330

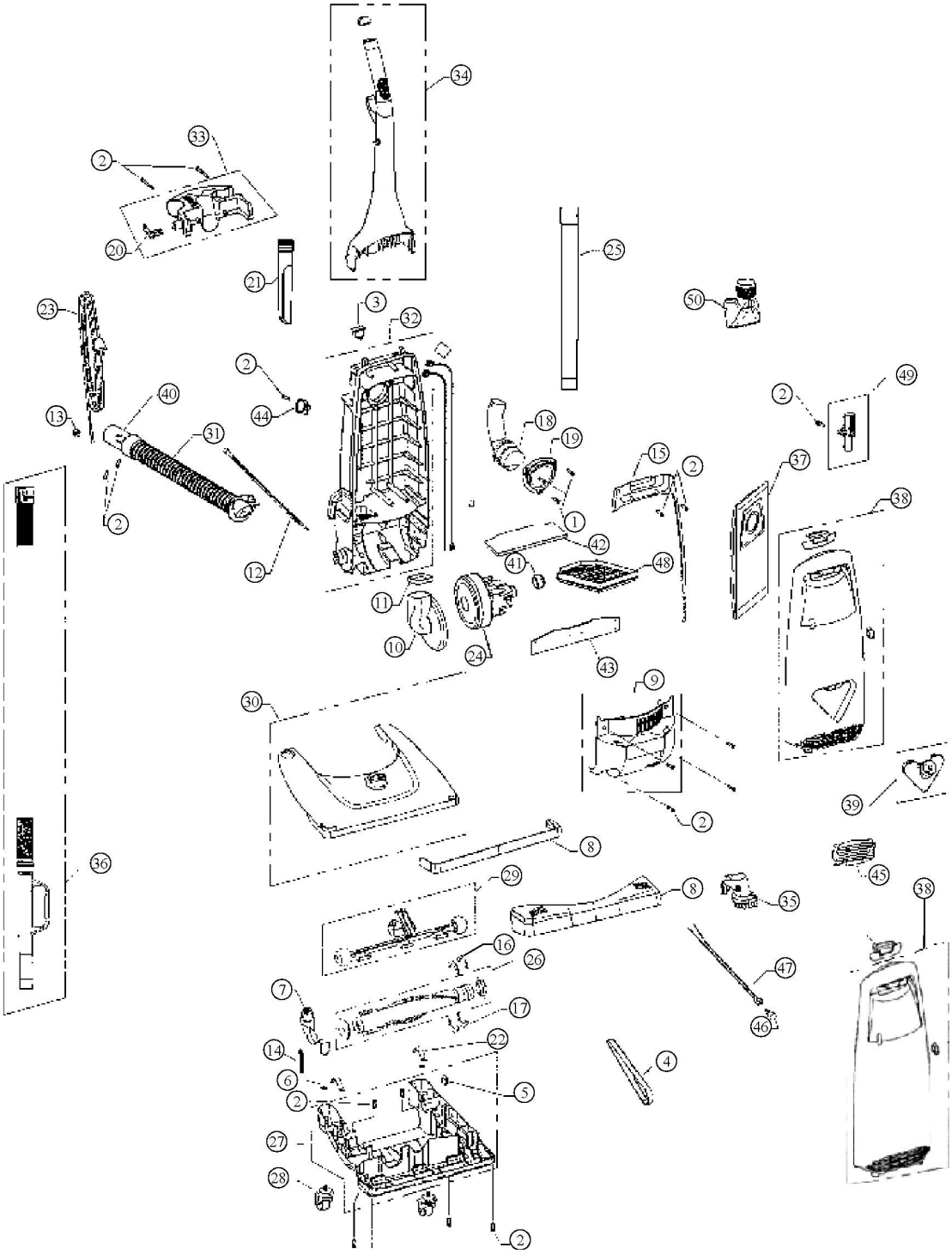

Dirt Devil®

SWIVEL GLIDE™

SWIVEL ULTRA GLIDE™

SG

Model No.
086310
086315
086321
086330

Item	Part Number	Model's To Fit	Part Description
1	1250100000	ALL	SCREW
2	1720430000	ALL	SCREW 811 x 5/8
3	1720128300	ALL	SWITCH
4	3720310001	ALL	STYLE 4/5 BELT 2 PK
5	1720380000	ALL	BELT GUIDE CLIP
6	1863054000	ALL	CASTER PAL NUT
7	1863060B00	ALL	HANDLE RELEASE PEDAL
8	1863080B00	086310, 086315, 086321	BUMPER
	1865088K00	086330	SCUFF GUARD BUMPER
9	2864095600	ALL	MOTOR COVER
10	1863109600	ALL	MOTOR AIR DUCT
11	1863112600	ALL	MOTOR DUCT SEAL
12	1863168000	ALL	NEON LAMP
13	1863130600	ALL	STRAIN RELIEF
14	1690350000	ALL	HANDLE RELEASE PEDAL SPRING
15	1863295600	ALL	SWITCH COMPARTMENT COVER
16	1863307700	ALL	NOZZLE COVER FELT
17	1863308000	ALL	BELT COVER FELT
18	1863335600	ALL	HOSE INLET
19	1863337600	ALL	HOSE INLET RETAINER
20	1920015B00	ALL	CORD HOOK
21	1920035600	ALL	CREVICE TOOL
22	1920140000	ALL	PIVOT CLAMP
23	2997125600	ALL	POWERCORD 25 FT
24*	2630172000	ALL	MOTOR see notes
25	2863360600	ALL	TELESCOPIC WAND
26	2863005000	ALL	BRUSH ROLL ASSEMBLY
27	2863544600	ALL	NOZZLE BASE ASSEMBLY
28	2863038600	ALL	CASTER
29	2863040000	ALL	HEIGHT ADJUSTMENT ASSEMBLY
30	2863069600	086310	NOZZLE COVER ASSEMBLY
	2863082A00	086315	NOZZLE COVER ASSEMBLY
	2863082J00	086321	NOZZLE COVER ASSEMBLY
	2863069K00	086330	NOZZLE COVER ASSY EXT

Dirt Devil®

SWIVEL GLIDE™

SWIVEL ULTRA GLIDE™

SG

Model No.
086310
086315
086321
086330

Item	Part Number	Model's to Fit	Part Description
31	2863087Q00	ALL	LOWER HOSE ASSEMBLY
32	2863591600	ALL	BACK PANEL ASSEMBLY
33	2863175600	ALL	TOOL CADDY ASSEMBLY
34	2863235600	086310, 086315, 086330	HANDLE ASSEMBLY
	2864040600	086321	HANDLE ASSEMBLY
35	2863400600	086310, 086315, 086321	CORNER TOOL ASSEMBLY
36	2863405600	086310, 086315, 086330	HOSE ASSEMBLY
	2864172600	086321	STRETCH HOSE ASSY w/ANCHOR
37	3920047001	ALL	TYPE U BAGS / 3 PACK
38	9863142A00	086310	FRONT PANEL ASSEMBLY
	9863152A00	086315	FRONT PANEL ASSEMBLY
	9863152J00	086321	FRONT PANEL ASSEMBLY
	2863151K00	086330	FRONT PANEL ASSEMBLY
39	2863320600	086310, 086315, 086321	EDGE WEDGE TRIAGLE TOOL
	2863320J00	086321	EDGE WEDGE TRIAGLE TOOL
40	1863411600	ALL	WAND ADAPTOR
41	1863105600	ALL	MOTOR GROMMET
42	1863115000	086310, 086315	BAG CHAMBER FILTER
	1863118000	086321, 086330	BAG CHAMBER FILTERMICRO
43	1863120000	086310, 086315	FRONT PANEL EXHAUST FILTER
	1863122000	086321, 086330	FRONT PANEL EXHUAST FILTER MICROFRESH
44	1690360600	ALL	TOOL CLIP
45	1864225000	ALL	LENS
46	1920906000	ALL	BULB # 906
47	1863221000	ALL	SOCKET ASSEMBLY w/DIODE
48	1863420600	086321, 086330	** FILTER SUPPORT
49	2864300000	086330	MECHANICAL FBI
50	2920215600	086330	2 IN 1 FLOOR TOOL ASSY