This Owner's Manual is provided and hosted by Appliance Factory Parts.

Appliance Factory Parts
Experts in BBQ, Humidifier, & Appliance Parts
1-800-955-7075

Royal 110020CA Owner's Manual

Shop genuine replacement parts for Royal 110020CA

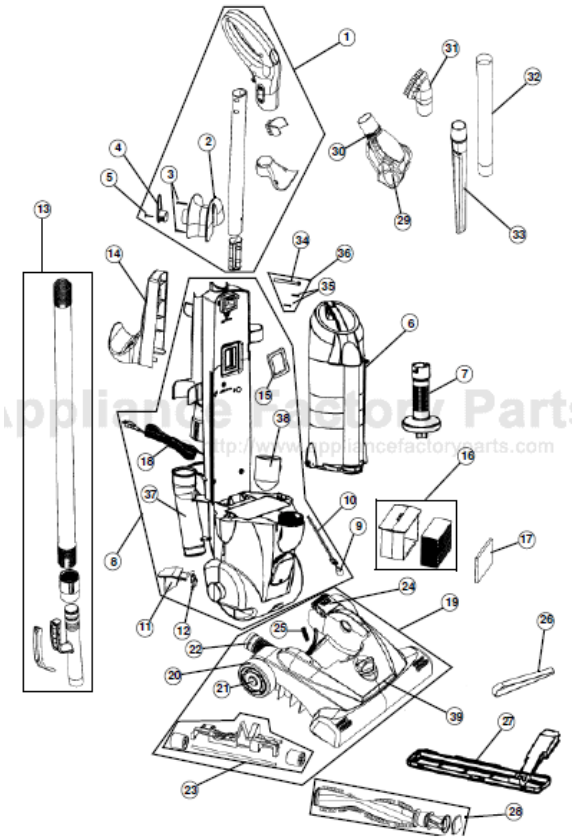

Find Your Royal Vacuum Cleaner Parts - Select From 772 Models

-------- Manual continues below --------

Dirt Devil

ACTION

ASSEMBLY SCHEMATIC

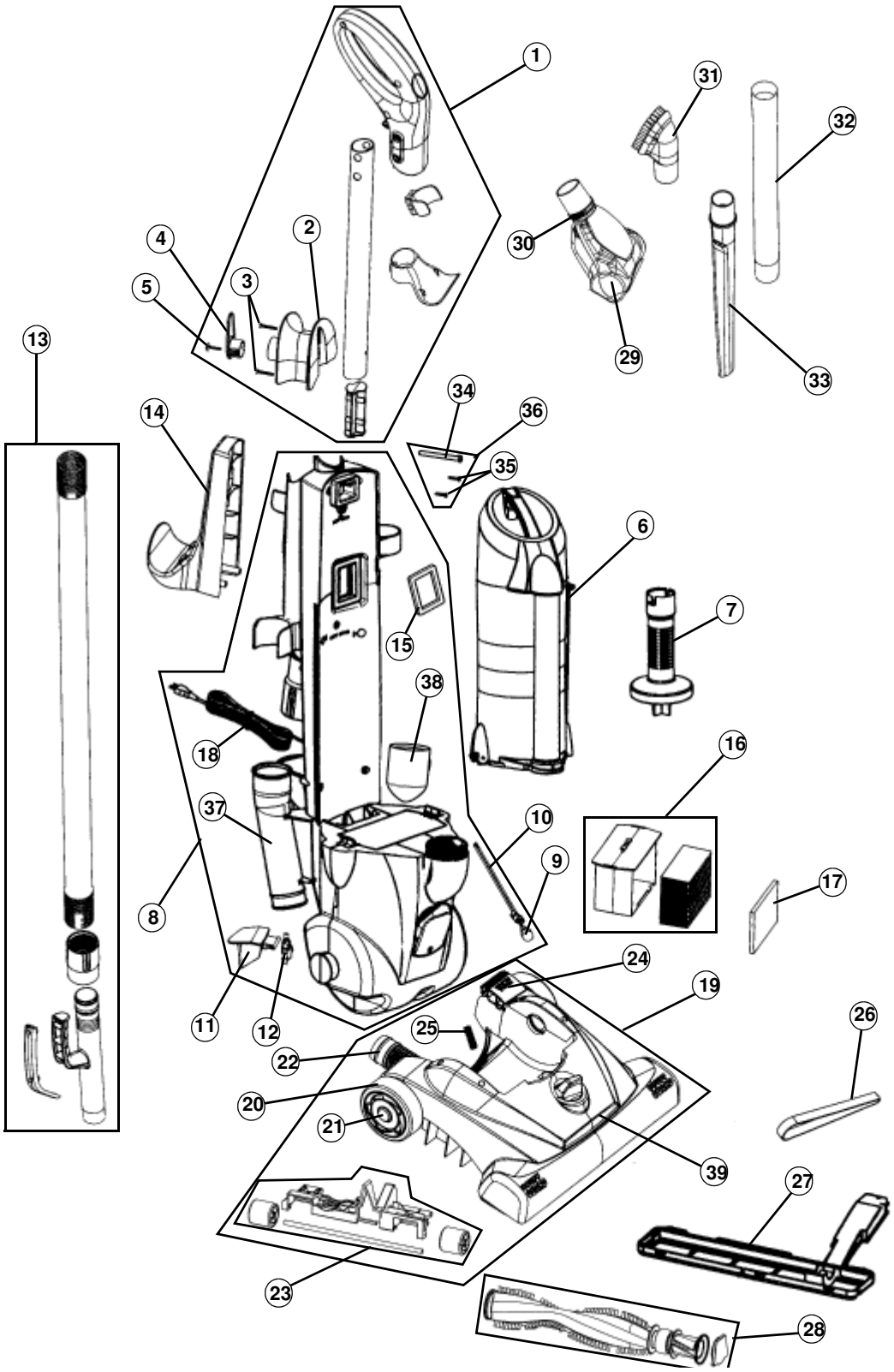

MODEL NO.

110020
110020CA

Dirt Devil

ACTION

MODEL NO.

110020
110020CA

Item	Part Number	Models To Fit	Part Description
1	2LS0005000	110020, 110020CA	HANDLE ASSEMBLY
2	1LK0610300	110020, 110020CA	UPPER TOOL CADDY
3	1250100000	110020, 110020CA	BODY SCREW
4	1LK0620300	110020, 110020CA	CORD HOOK - GREY
5	1QC0990000	110020, 110020CA	CORD HOOK SCREW
6	2LS0200000	110020, 110020CA	DIRT CUP ASSEMBLY
7	1LT0385000	110020, 110020CA	AIR DIRECTOR
8	2LS0500600	110020, 110020CA	MAIN BODY ASSEMBLY W/MOTOR
9	1920906000	110020, 110020CA	BULB #906
10	2JK0600000	110020, 110020CA	SOCKET ASSEMBLY
11	1JK0115000	110020, 110020CA	SWITCH PEDAL
12	1860081000	110020, 110020CA	SWITCH
13	2LS0700600	110020, 110020CA	UPPER HOSE ASSEMBLY
14	1LS0605600	110020, 110020CA	CARRY HANDLE
15	1LS0325600	110020, 110020CA	DIRT CUP INLET GASKET
16	2LK0540000	110020, 110020CA	F-13 HEPA FILTER - EXHAUST
17	1LK0545000	110020, 110020CA	FOAM FILTER
	1LK5613170	110020, 110020CA	FOAM FILTER - ANTI MICROBIAL
	3LK0547000	110020, 110020CA	SCENTED FOAM FILTER APPLE CINN (1 PER)
	3LK0548000	110020, 110020CA	SCENTED FOAM FILTER FRESH/CLEAN (1PER)
18	2997232600	110020, 110020CA	POWER CORD
19	2LS0100000	110020, 110020CA	NOZZLE COVER AND BASE ASSEMBLY
20	1881065600	110020, 110020CA	REAR WHEEL
21	1881070000	110020, 110020CA	HUB CAP
22	2JI0060Q00	110020, 110020CA	LOWER HOSE ASSEMBLY
23	2JI0030600	110020, 110020CA	ROLLER LIFTER ASSEMBLY
24	1JK0040000	110020, 110020CA	HANDLE RELEASE PEDAL
25	1JC0070000	110020, 110020CA	HANDLE RELEASE PEDAL SPRING
26	1540310001	110020, 110020CA	STYLE 5 BELT
27	1JI0015000	110020, 110020CA	NOZZLE GUARD - 15”
28	2JI1055600	110020, 110020CA	BRUSH ROLL ASSEMBLY
29	2UTT000000	110020, 110020CA	TURBO TOOL ASSEMBLY
	1UTT020000	110020, 110020CA	BELT - TURBO TOOL
30	1UTT030000	110020, 110020CA	LOCK RING - TURBO TOOL
31	2JC0255600	110020, 110020CA	2 IN 1 BRUSH ASSEMBLY

MODEL NO.

110020
110020CA

Item	Part Number	Models To Fit	Part Description
32	1JC0245600	110020, 110020CA	EXTENSION WAND
33	1JC0250600	110020, 110020CA	CREVICE TOOL
34	1690325000	110020, 110020CA	HANDLE SCREW
35	1720430000	110020, 110020CA	SCREW - TOOL CADDY
36	2690325000	110020, 110020CA	HANDLE SCREW ASSEMBLY
37	1LK0510600	110020, 110020CA	LOWER HOSE ADAPTOR
38	1LK0575600	110020, 110020CA	WAND SUPPORT
39	1JI0006Q00	110020, 110020CA	NOZZLE HOUSING WINDOW