This Owner's Manual is provided and hosted by Appliance Factory Parts.

Appliance Factory Parts
Experts in BBQ, Humidifier, & Appliance Parts
1-800-955-7075

Royal UD40240 Owner's Manual

Shop genuine replacement parts for Royal UD40240

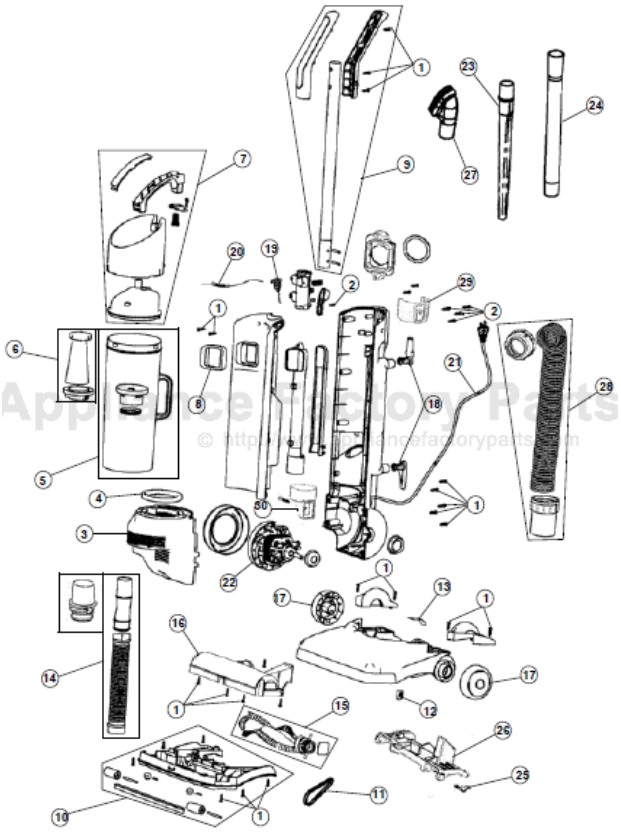

Find Your Royal Vacuum Cleaner Parts - Select From 772 Models

-------- Manual continues below --------

Dirt Devil

dynamite™ Bagless QuickVac

dynamite™ plus Bagless QuickVac

Assembly Schematic

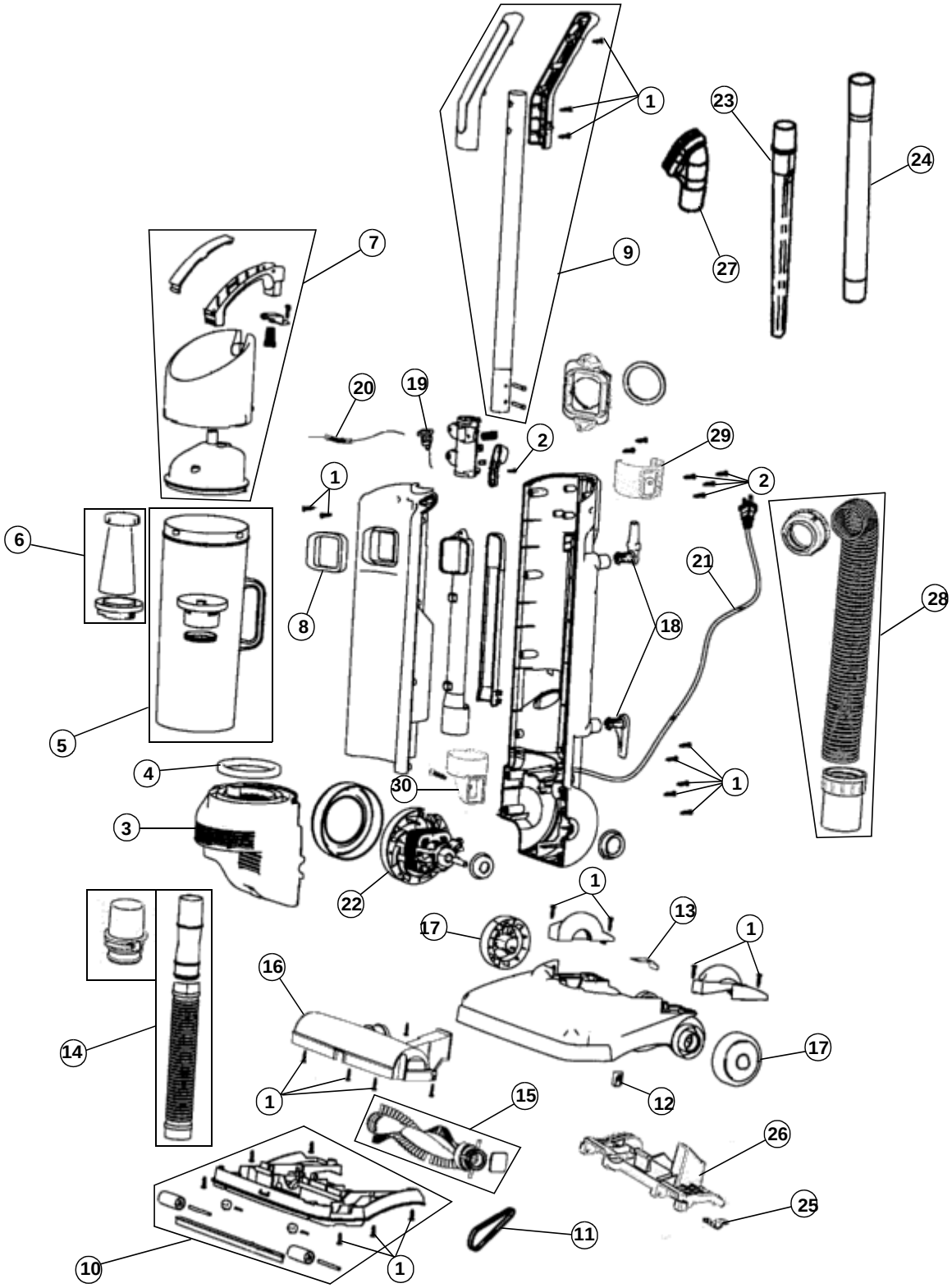

084600
084605
084610RED
084611BLUE
084612GREEN
084613SILVER
084614CAORG
084615BLACK
084615CAWHT
084616MAGENTA
084650(X)
084651
UD40210PURP
UD40215LIME
UD40220ORG
UD40225ROYAL
UD40240BLUE BLA
UD40245PNK POS
UD40250ROY BL
UD40290TEAL
UD40295BLUE AQ
UD40300MANGO

PART LISTING

Item	Part Number	Models To Fit	Part Description
1	1720430000	ALL	BODY SCREW
2	1SN0075000	ALL	HANDLE TUBE SCREW 4 X 10
3	1SN0010000	ALL EXCEPT 084650, 084651	MOTOR HOUSING - RED
	1SN1010000	084650, 084651	MOTOR HOUSING
4	1SN0045600	ALL	MOTOR INLET GASKET
5	2SN0125Q00	ALL	DIRT CUP ASSEMBLY
6	3SFA11500X	ALL	F-2 / FILTER ASSEMBLY
7	2SN0110000	ALL	DIRT CUP LID ASSEMBLY - RED
8	1SN0050600	ALL	DIRT CUP INLET GASKET
9	2SN0170000	ALL	HANDLE ASSEMBLY
10	2SN0205600	ALL EXCEPT 084650, 084651	NOZZLE GUARD ASSEMBLY
	2SN1205600	084650, 084651	NOZZLE GUARD ASSEMBLY
11	1SN0220001	ALL	STYLE 15 BELT
12	1720380000	ALL	BELT CLIP GUIDE
13	1SN0245000	ALL EXCEPT 084650, 084651	SPRING PLATE
	1SN1240000	084650, 084651	SPRING PLATE
14	2SN0250600	ALL EXCEPT 084650, 084651	LOWER HOSE ASSEMBLY
	2SN0250Q00	084650, 084651	LOWER HOSE ASSEMBLY
15	2SN0275000	ALL	BRUSH ROLL ASSEMBLY
16	1SN0255600	ALL	BRUSH ROLL COVER
17	1SN0240600	ALL	REAR WHEEL
18	1SN0090000	ALL EXCEPT 084650, 084651	CORD HOOK
	1SN0330000	084650, 084651	CORD HOOK
19	1SN0100000	ALL	ROCKER SWITCH
20		ALL	FUSE
21		ALL	POWER CORD 30’
22		ALL	MOTOR
23	1SN0112000	084650, 084651	CREVICE TOOL
24	1SN0110000	084650, 084651	EXTENSION WAND
25		084650, 084651	LIFTER PLATE
26		084650, 084651	ROLLER LIFTER ASSEMBLY
27	1SN0114000	084650, 084651	UPHOLSTERY TOOL
28	2SN1075000	084650, 084651	UPPER HOSE ASSEMBLY
29	1SN0113000	084650, 084651	UPPER WAND HOLDER
30	1SN0115000	084650, 084651	LOWER WAND CUP

084600
084605
084610RED
084611BLUE
084612GREEN
084613SILVER
084614CAORG
084615BLACK
084615CAWHT
084616MAGENTA
084650(X)
084651
UD40210PURP
UD40215LIME
UD40220ORG
UD40225ROYAL
UD40240BLUE BLA
UD40245PNK POS
UD40250ROY BL
UD40290TEAL
UD40295BLUE AQ
UD40300MANGO