This Owner's Manual is provided and hosted by Appliance Factory Parts.

Appliance Factory Parts
Experts in BBQ, Humidifier, & Appliance Parts
1-800-955-7075

HUNTINGTON 6561-57 Owner's Manual

Shop genuine replacement parts for HUNTINGTON 6561-57

Find Your HUNTINGTON Grill Parts - Select From 154 Models

-------- Manual continues below part list --------

Available Replacement Parts for HUNTINGTON 6561-57

18013	LARGE PROBE HEAT INDICATOR
S21124	SCREW PHCP #8 X 12 +
Y-12220	S/B BUSHING SB 1.375 16 HEY
S15263	ROTISSERIE BUSHING
S15299	WASHER COUNTERWEIGHT ROTIS
S15270	ROTISSERIE COUNTERWEIGHT ASSY
S15271	ROTISSERIE HANDLE +
Y-11987	BOLT CARRIAGE 1/4-20x1.25 UNC+
18433	OEM FLAV R WAVE - REGAL/IMPERIAL
10342-246	IGNITOR ELECTRONIC TRIPLE +
29005-034	VALVE ASSEMBLY 4V+SB LP +
22005-434	CONTROL COVER - 5 KNOB
22005-474	CONTROL COVER 6 KNOBS +
Y-12223	MAGNET SNAP IN - DOOR
Y-12222	MAGNET - DOOR
23000-253	SIDE BURNER LID IR SS
23000-271	SIDE BURNER BODY BASE
22009-901	GREASE PAN FORMED +
10342-E13	ELECTRODE W/WIRE
10342-T18	WIRE ELECTRODE S/B 600 +
11051	burner, Read Ext info please...
99041	heat plate, ss, 17.5625 x 6.3125
27005-91	FIREBOX-HEAT SHIELD 500 4V .5 GALVALUM C
22005-991	WARMING RACK PORC COATED 500
20809-957	REAR BURNER TUBE ASSMBLY W/COMP. FITTING
10693-109	ORIFICE SPUD RB 1.09MM 5/16 32
S15245	ROTIS MOTOR-220V AC +
10240-20	DOOR PIN TOP
10240-19	DOOR PIN BOTTOM
29005-074	CONTROL ASSY 500 LP 4V SB RB

29005-077	CONTROL ASSY 4V S/B R/B NG
22005-413	CONTROL COVER 4V MAIN 430SS
29005-014	CONTROL ASSEMBLY 4V LP
29005-017	CONTROL ASSEMBLY 4V NG
27055-901	GREASE TRAY PORC FORMED 440 +
21175-111A	DOOR ASSEMBLY RIGHT BLACK
21475-138	DOOR HANDLE RESIN
23009-608	SHELF STRAP RESIN W/SS STRIP +
23100-654	SIDE SHELF INSERT LHS 430SS +
22275-114A	DOOR ASSEMBLY RHS SS (NO HNDL)
67845	grid, ci, 19.1875 x 30.3125; Master Forg
11229	EXACT FIT CAST GRID - REGAL/IMPERIAL
10693-160	ORIFICE SPUD 1.60MM 5/16-32
00475	heat indicator
21039-911	CASTER BRACKET BLACK
S15256	SPIT ROD ROTISSERIE 31 INCH
20005-000	HARDWARE BAG STICK & CHAIN SS
10892-23	CASTER RUBBER 3 INCH W/PLATE
44089-60	NAMEPLATE PATRIOT
18633	BURNER - REGAL/IMPERIAL
82315-021	COOKBOX 500 HOOD PANEL PORC
21175-131A	DOOR ASSEMBLY LEFT BLACK
86101-631	LID END CAP LHS METALLIC BLACK
86101-611	LID END CAP RHS METALLIC BLACK
54009-936	HANDLE BEZEL - CHROME
SP11-25	STOP BUMPER - SILICONE
33200	get jet Orifice Drilled to #57
80012	regulator and hose READ ADD. INFO
10342-245	IGNITOR ELECTRONIC DUAL +
08032	BURNER CROSSOVER BAR, SS
04831	ELECTRODE WITH WIRE
21335-115	TOP MAGNET-BRACKET 500 BLK CHR
82305-021R	FIREBOX 500 REAR PANEL PNTD W/RIVNUTS

50502	HEAVY DUTY MEAT FORKS
10390-R81A	SIDE BURNER ASSY
86305-611	LID OUTER 500 BLACK
23009-99	SIDE BURNER TRIVET CI
17000	CONTROL KNOB - SMALL BLACK
17010	CONTROL KNOB RESIN LRG BLACK
10111-K45	HOSE 3/8 INCH ASSEMBLY NG 10 FOOT +
Y-11990	NUT HEX BRASS 3/8 27 RB LINE
10342-247	IGNITOR ELECTRONIC +
21071-13	DOOR HANDLE 500 GPB
22001-168	CONTROL KNOB BEZEL SML
22002-268	CONTROL KNOB BEZEL LARGE
24005-12AB	LID-HANDLE BENT,
21035-991	GREASE RAIL 440/500 SABLE BLK
27905-354	BURNER TUBE REAR 500 W/WINDSHIELD
27249-904	GREASE SHIELD MODULAR, 6.5 x 6
22025-903	COLLECTOR BOX ASSY 500 430SS
23101-613	SIDE SHELF - RIGHT SS430

HUNTINGTON™

REDDI-BILT BARBECUES

ASSEMBLY MANUAL & PARTS LIST | **MANUEL DE MONTAGE & LISTE DE PIECES**

HUNTINGTON™

6561-54
6561-57

HUNTINGTON™

6561-64
6561-67

HUNTINGTON™

6561-84
6561-87

HUNTINGTON™

6565-84
6565-87

RETAIN FOR FUTURE REFERENCE | **VEUILLEZ CONSERVER POUR REFERENCE ULTERIEURE**

1-800-265-2150 **info@omcbbq.com**

Onward Manufacturing Company
Since 1906
1000 East Market Street
Huntington, Indiana, 46750, USA

20084-E80 REV A 01/12

1	(4) 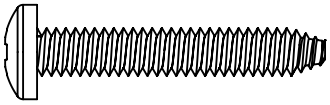 (4) 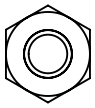 (4) 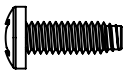 (2) 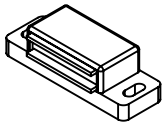

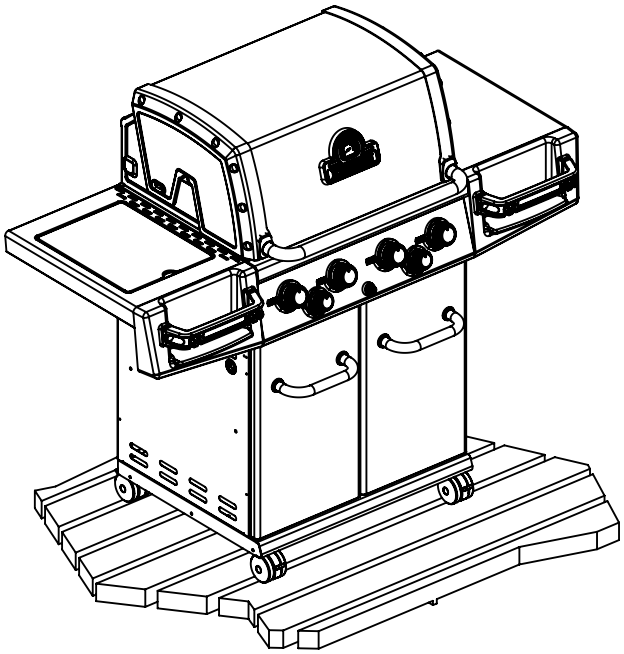

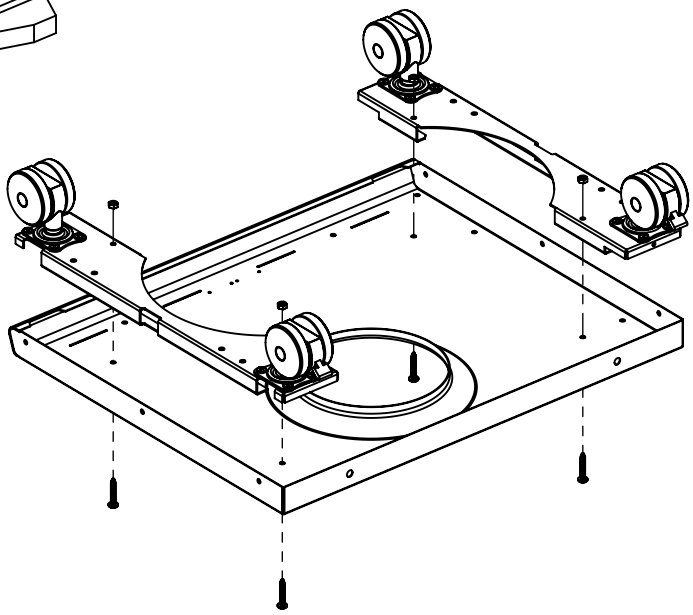

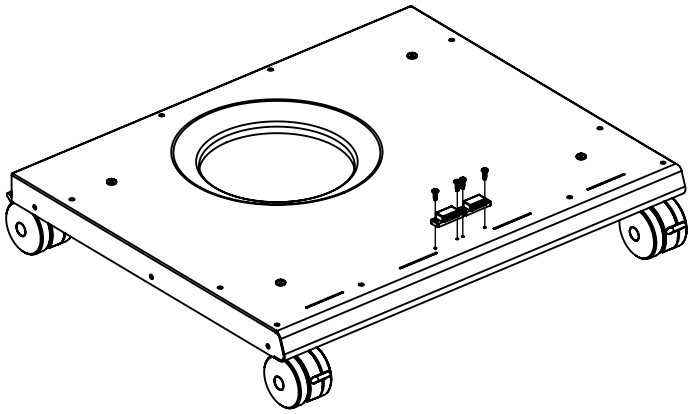

2	(1) (4) 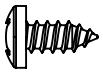

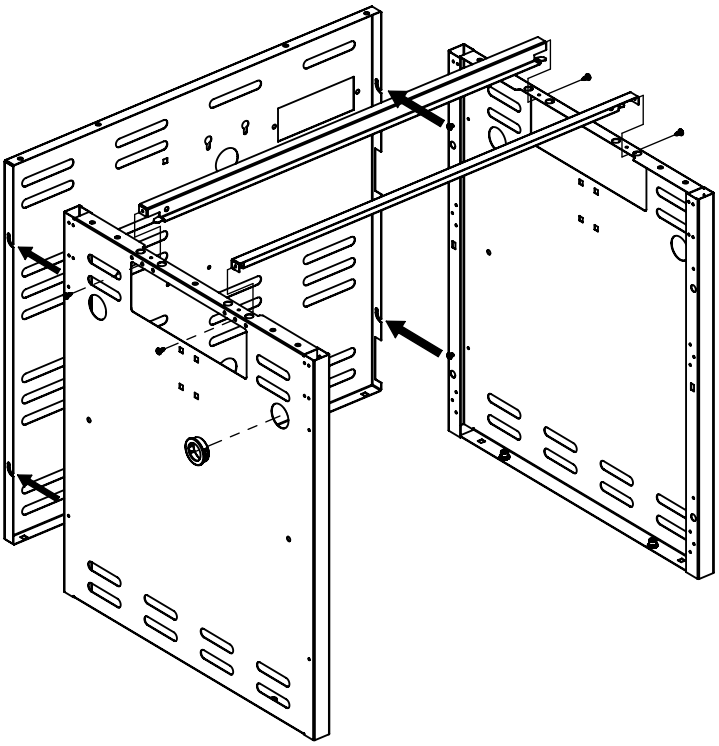

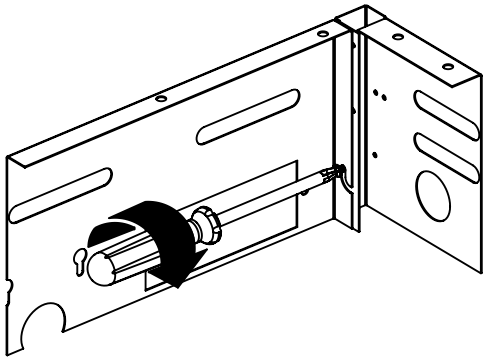

3	(2) (2) 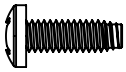

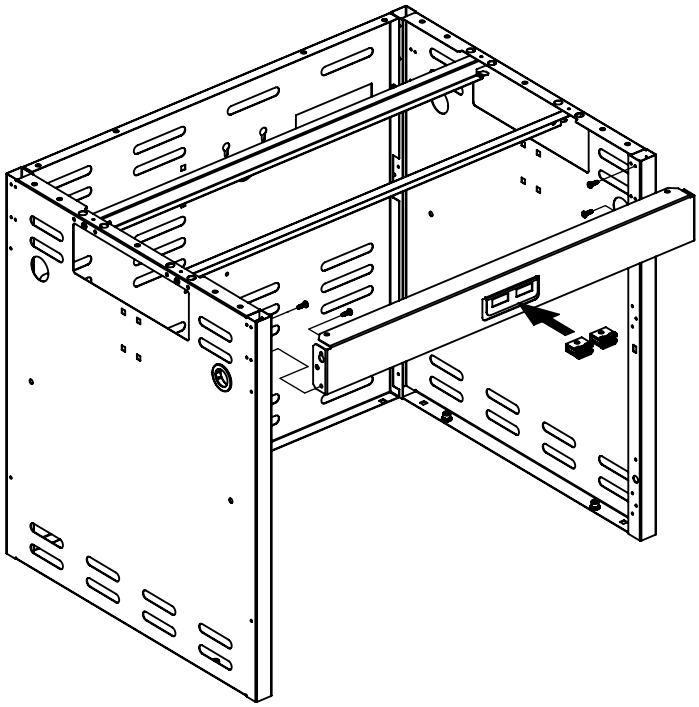

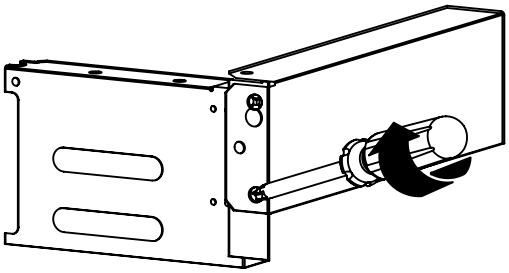

4	(6) 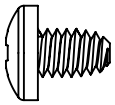

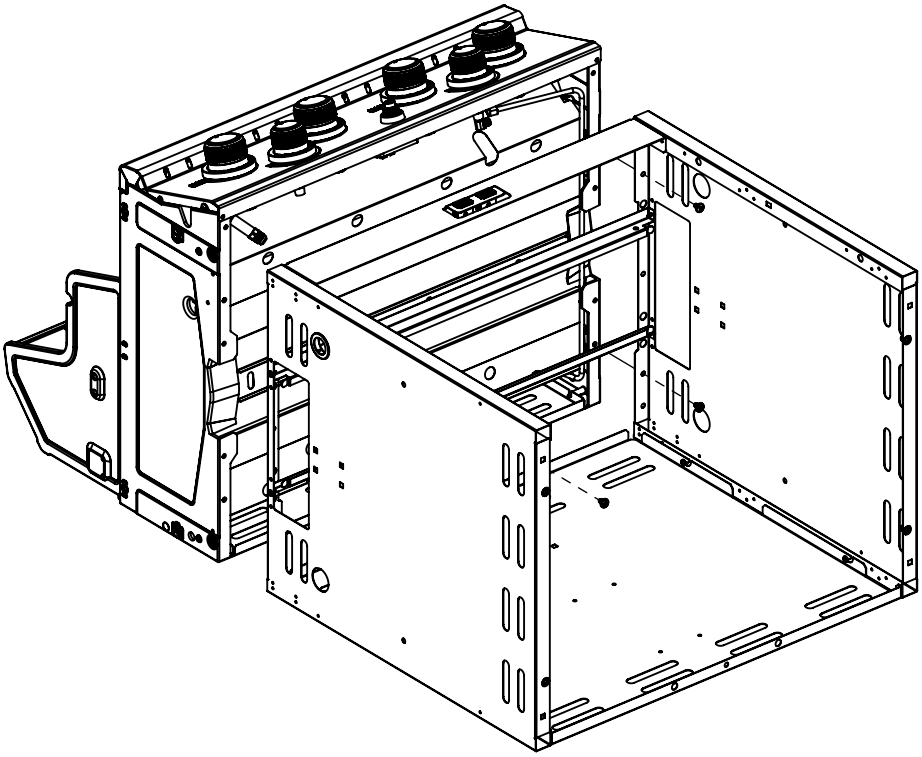

5	(2) 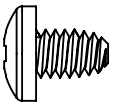 (4) 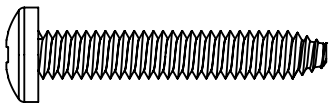

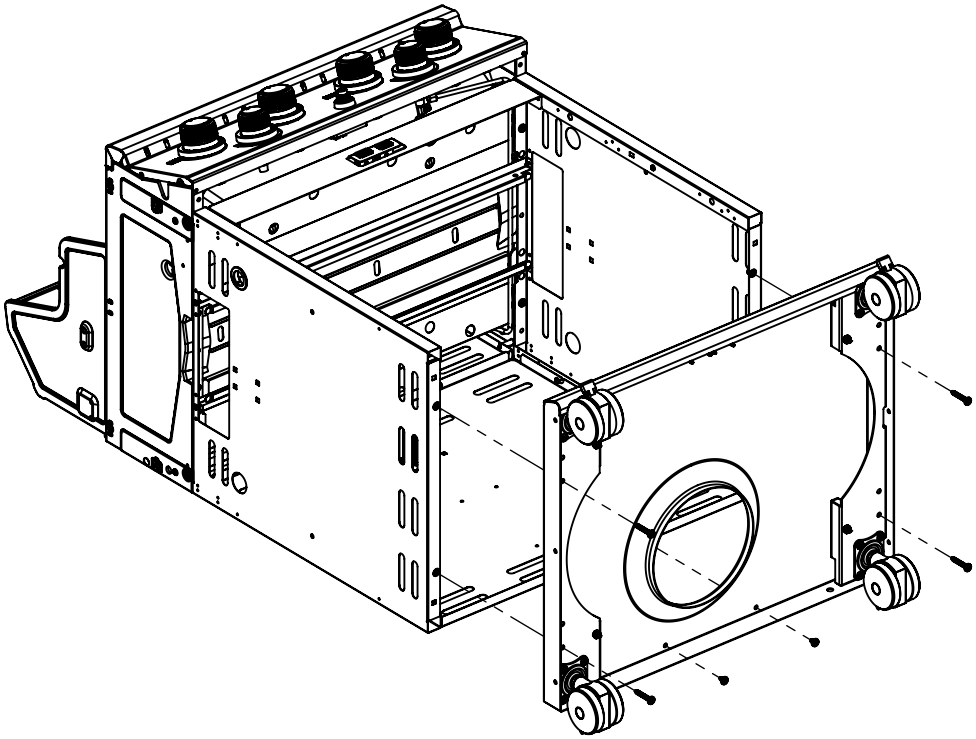

6	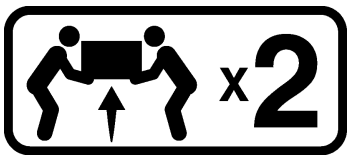

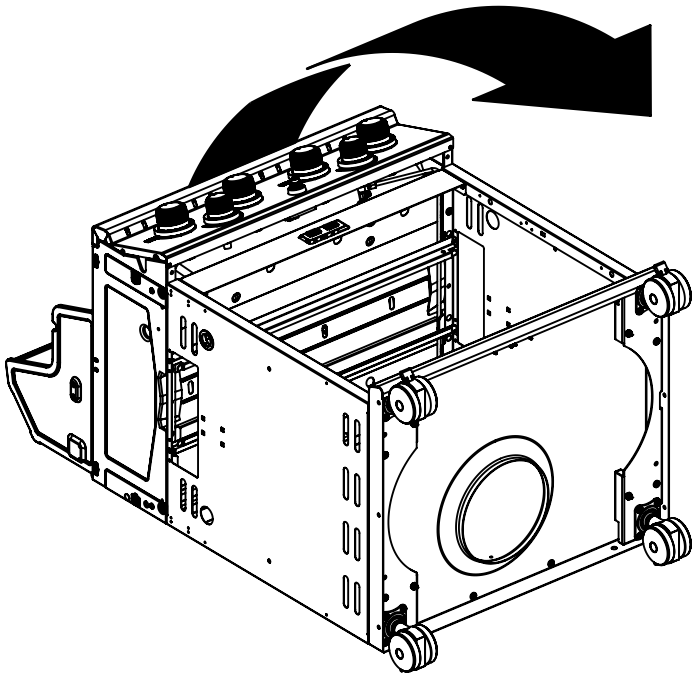

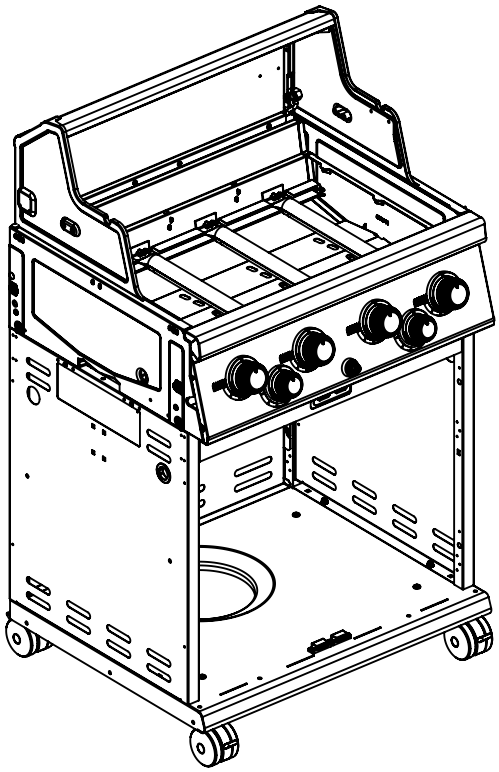

7	(4) 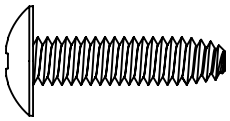

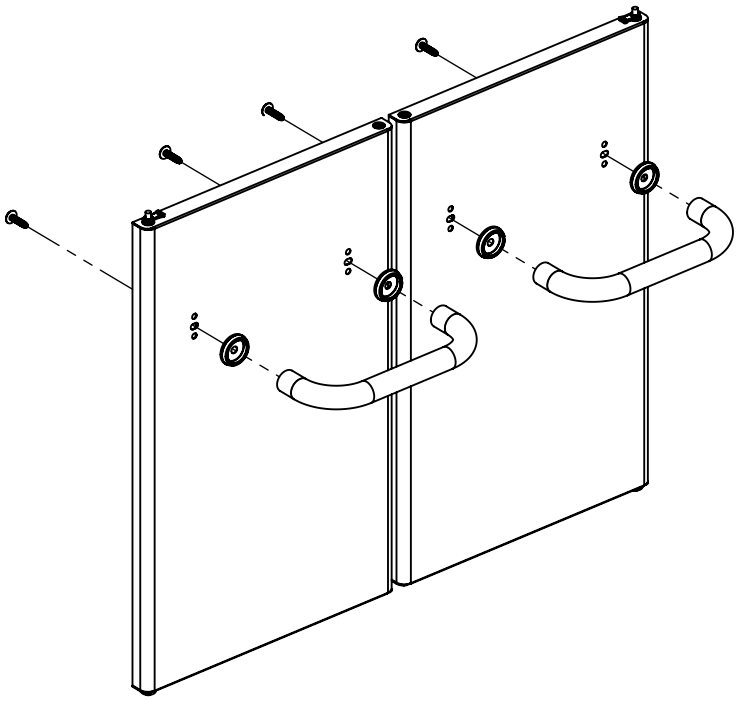

8	(2) 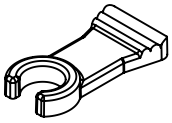

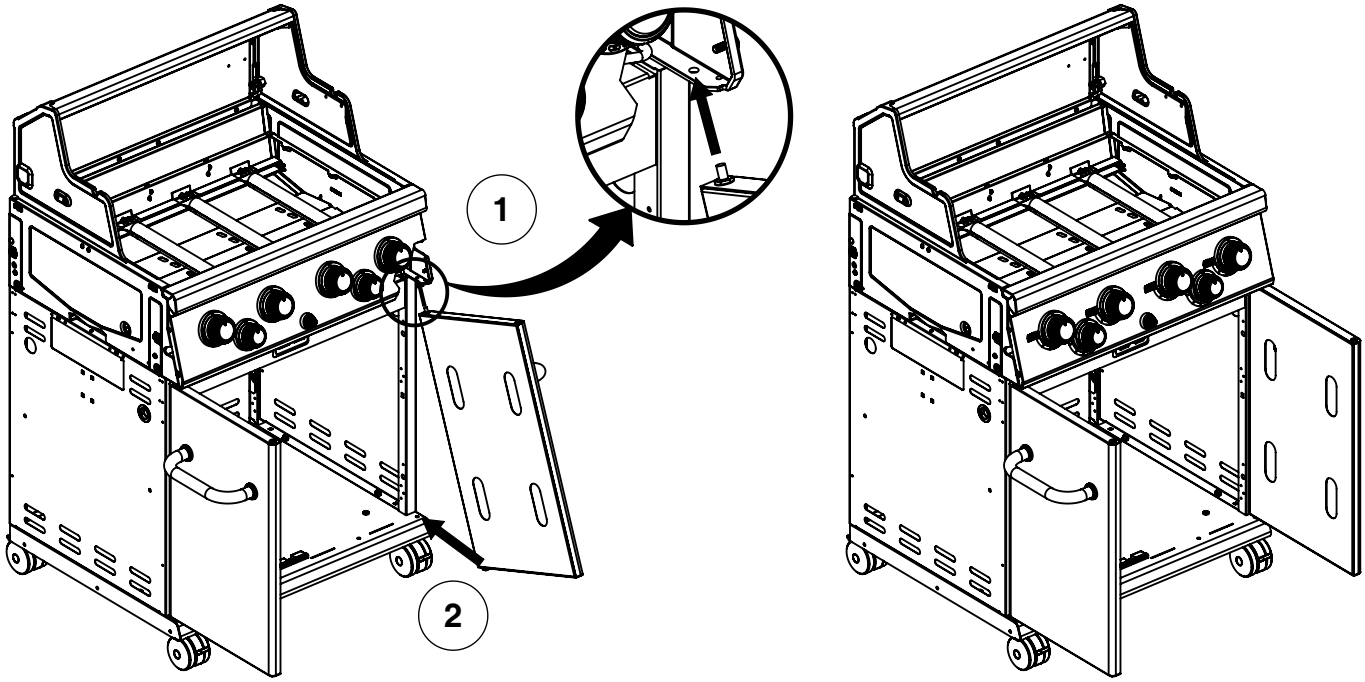

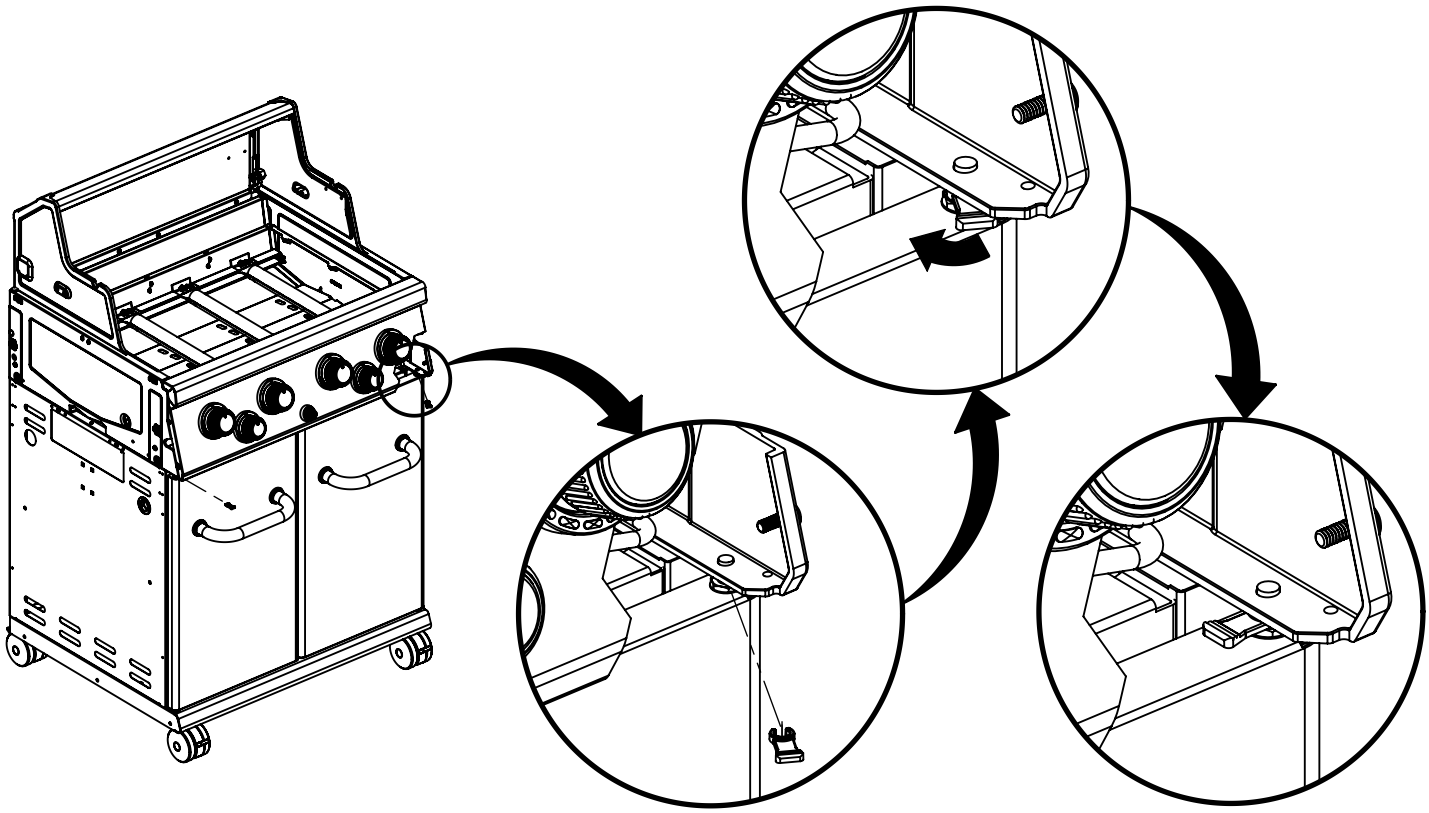

9	(2) 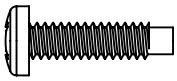

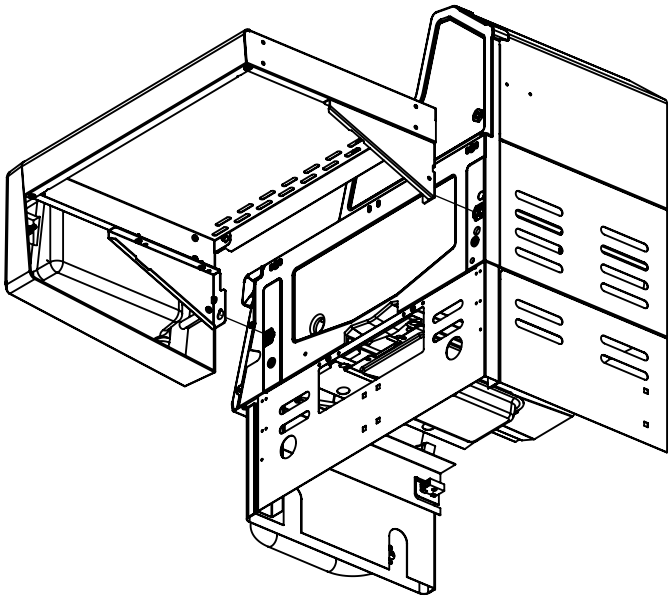

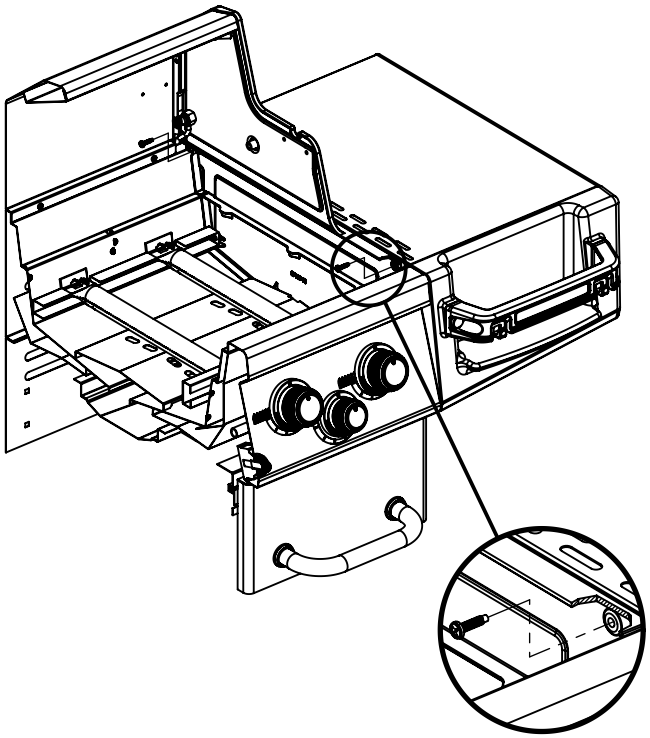

10	(2) 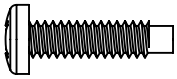

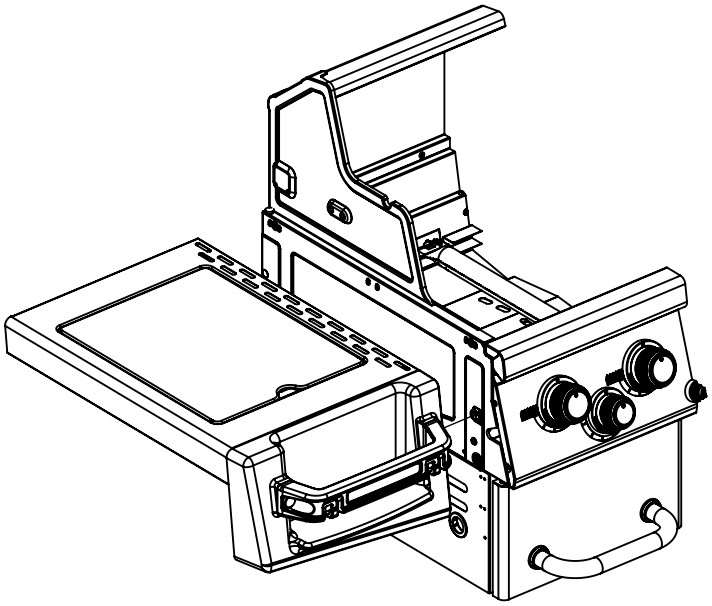

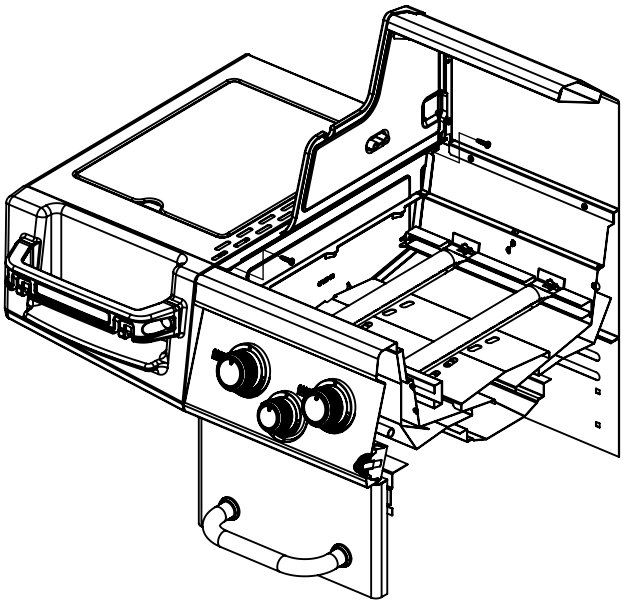

11	(1) 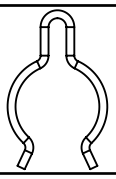

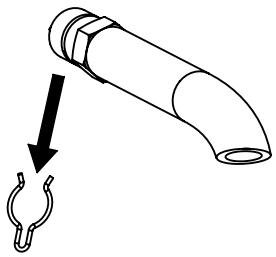

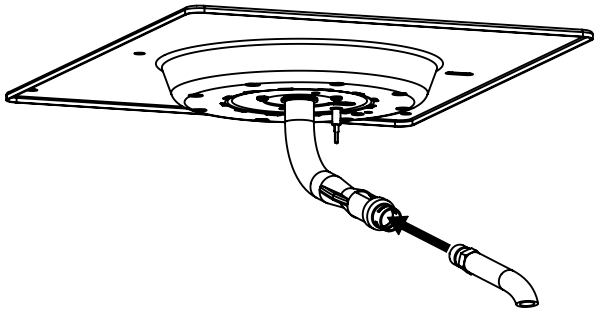

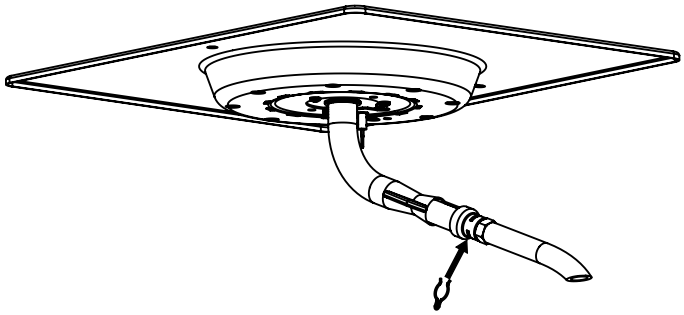

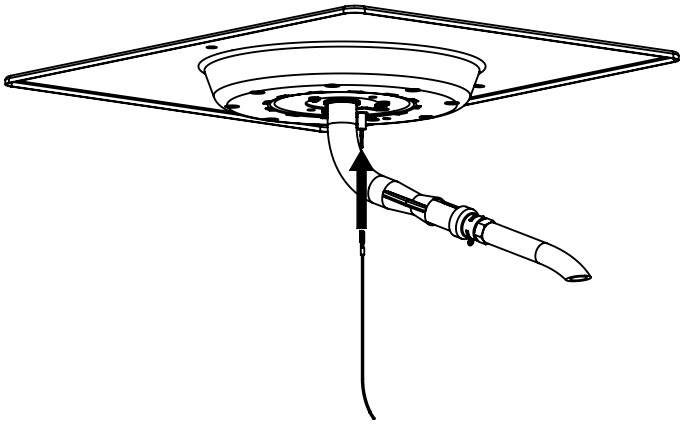

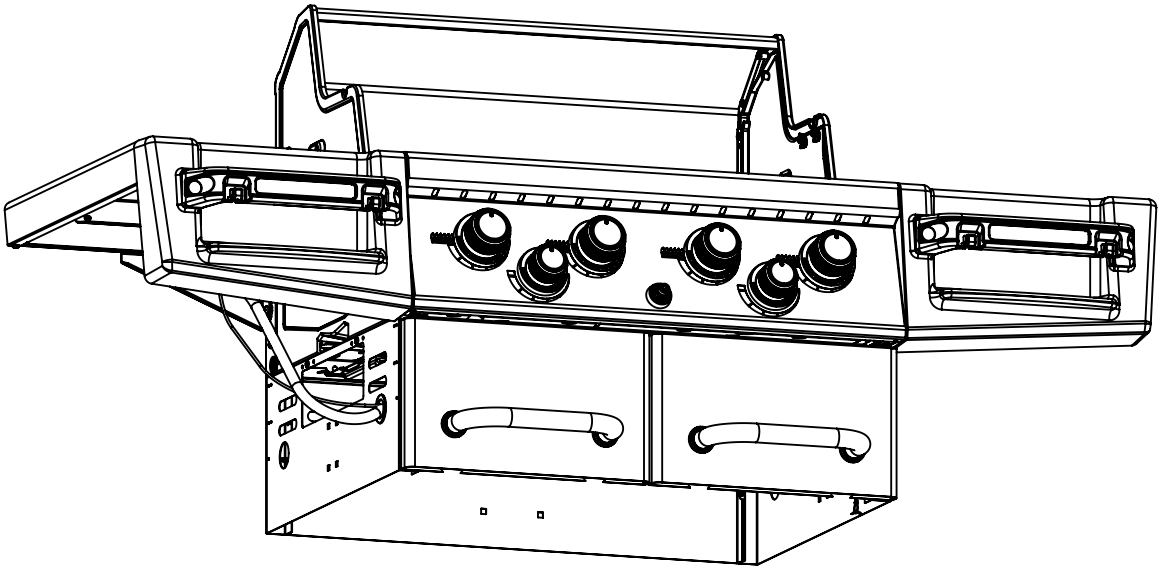

12	

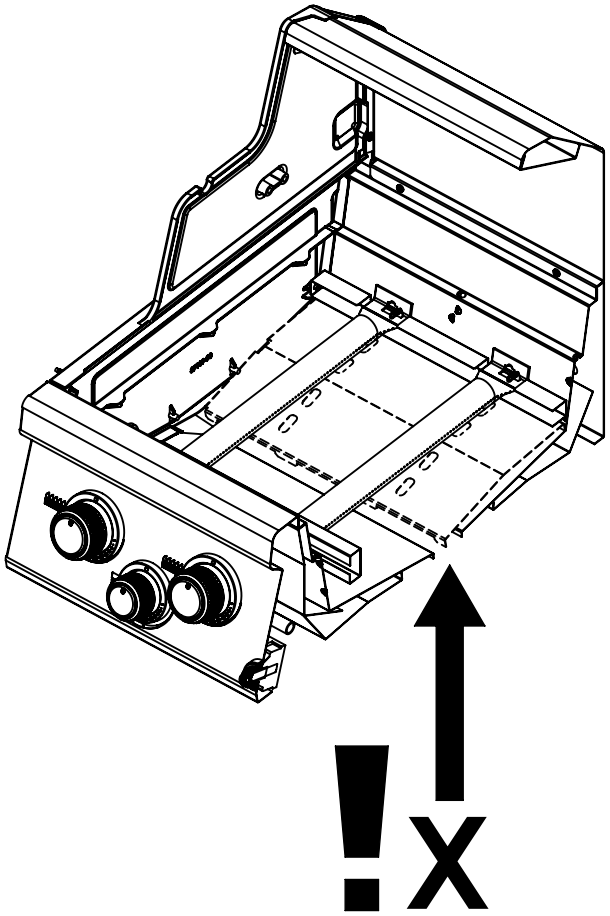

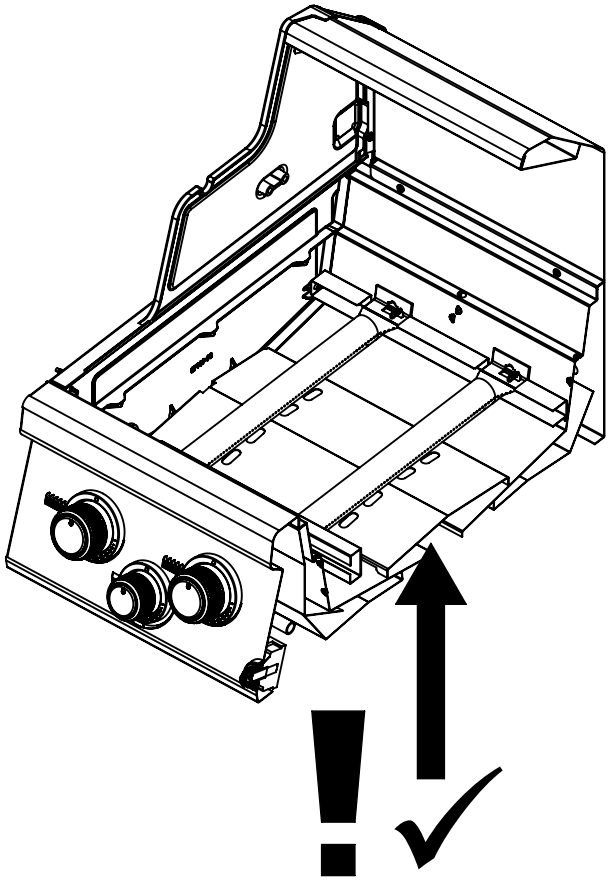

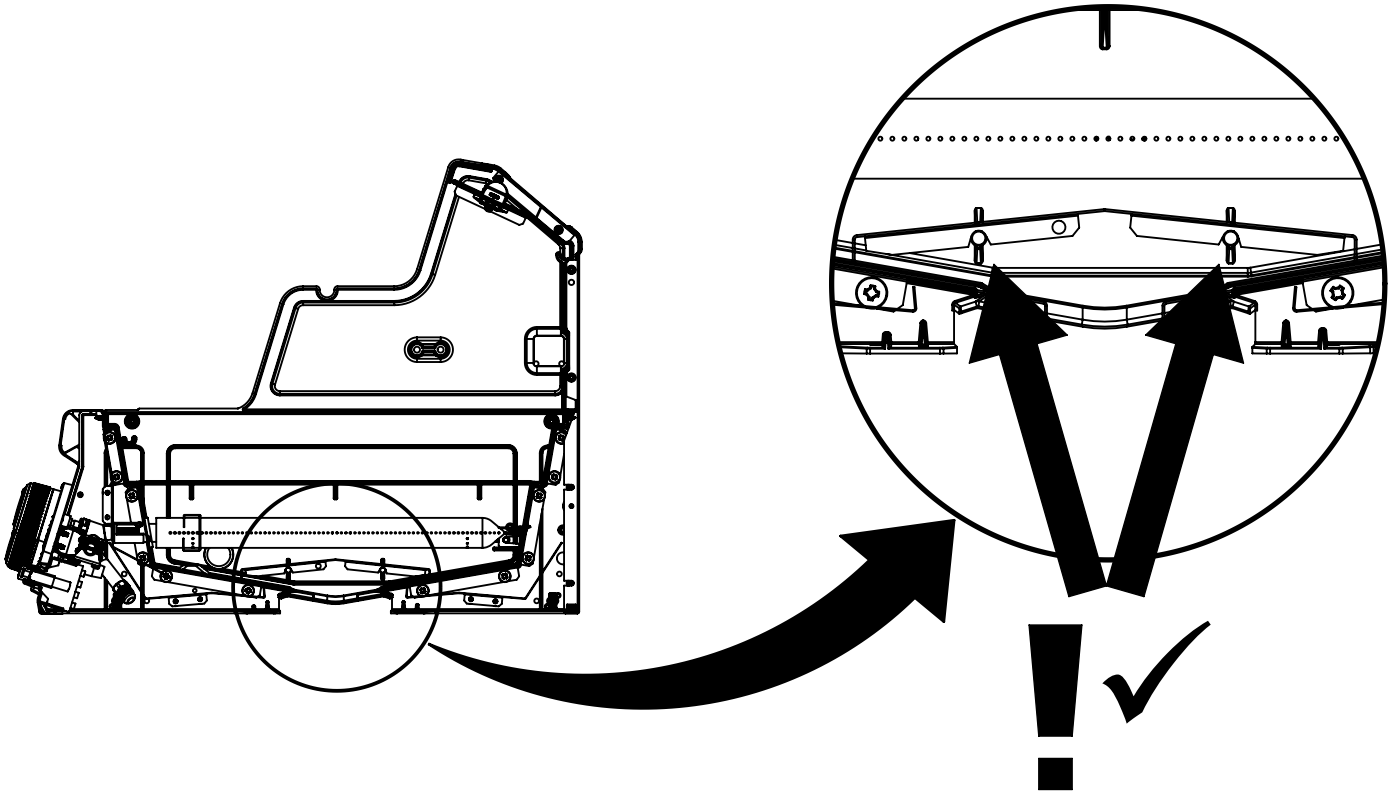

13	(2) 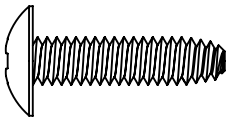 (2) 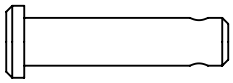 (2) 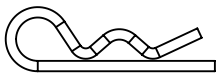 (1) 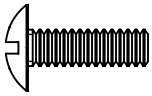

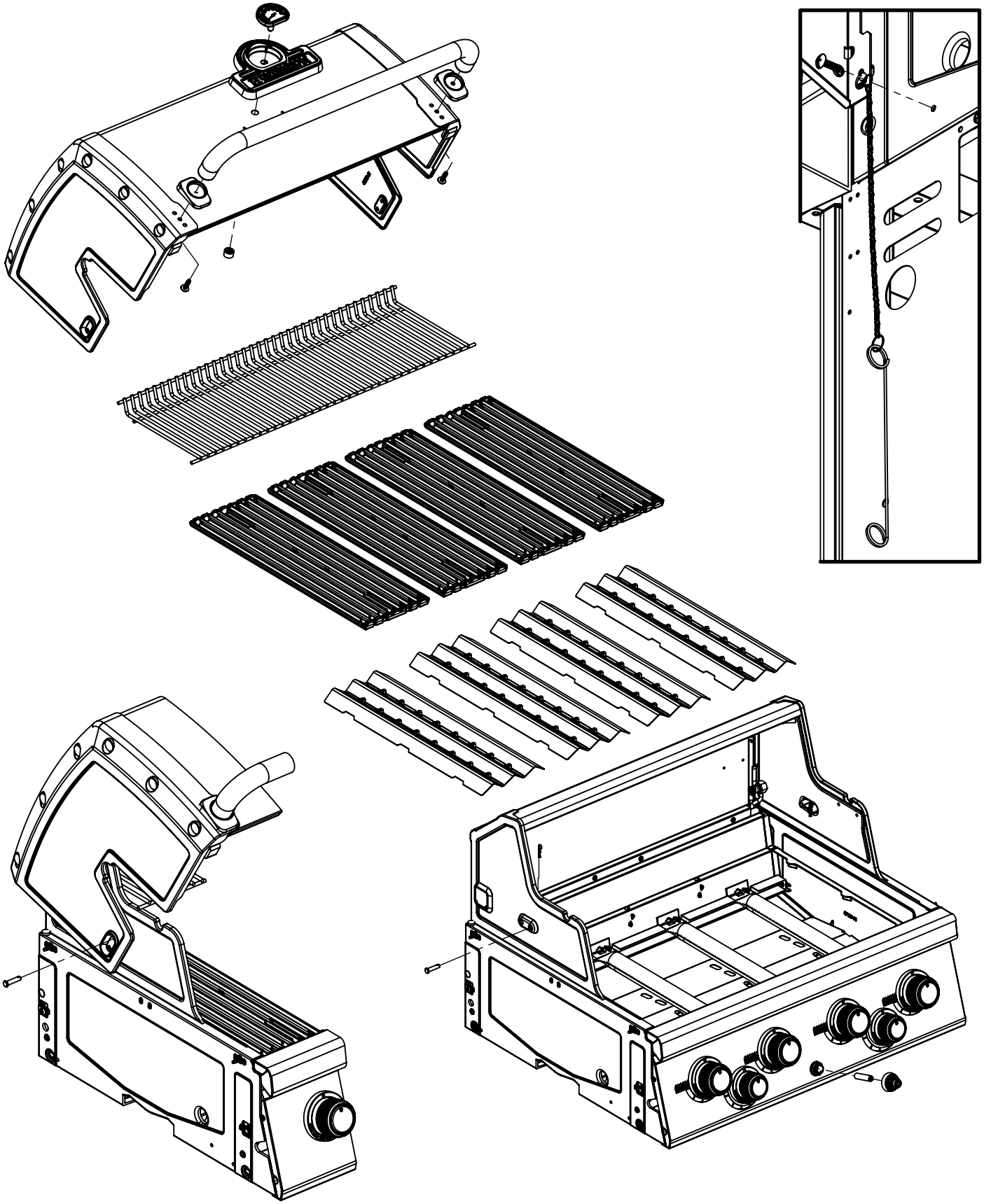

14	

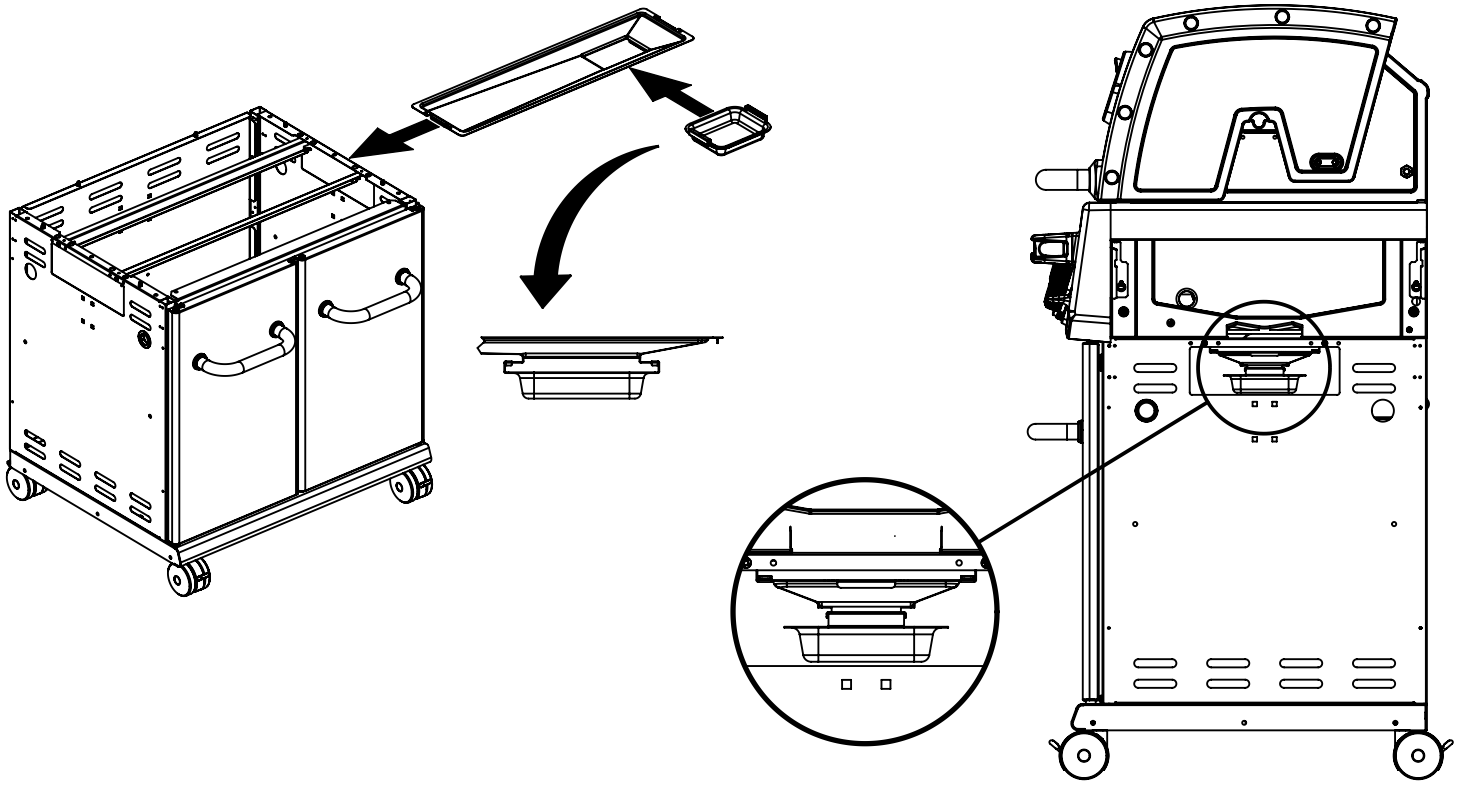

15	(1) 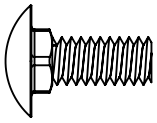 (1) 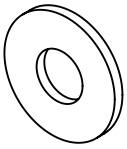 (1) 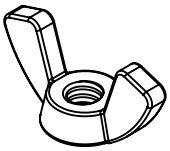

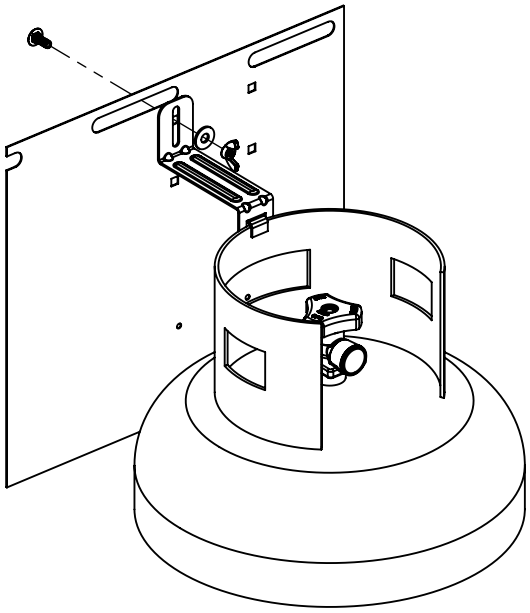

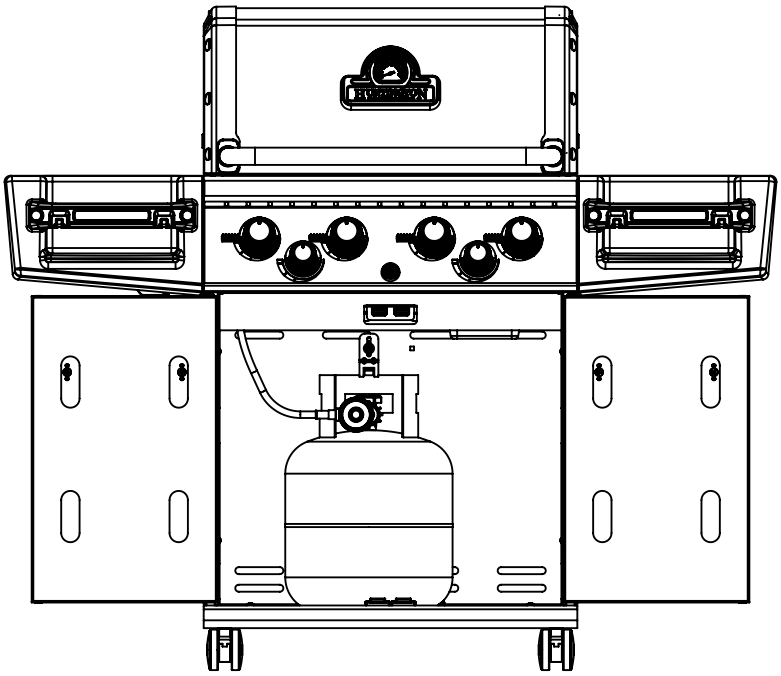

16	

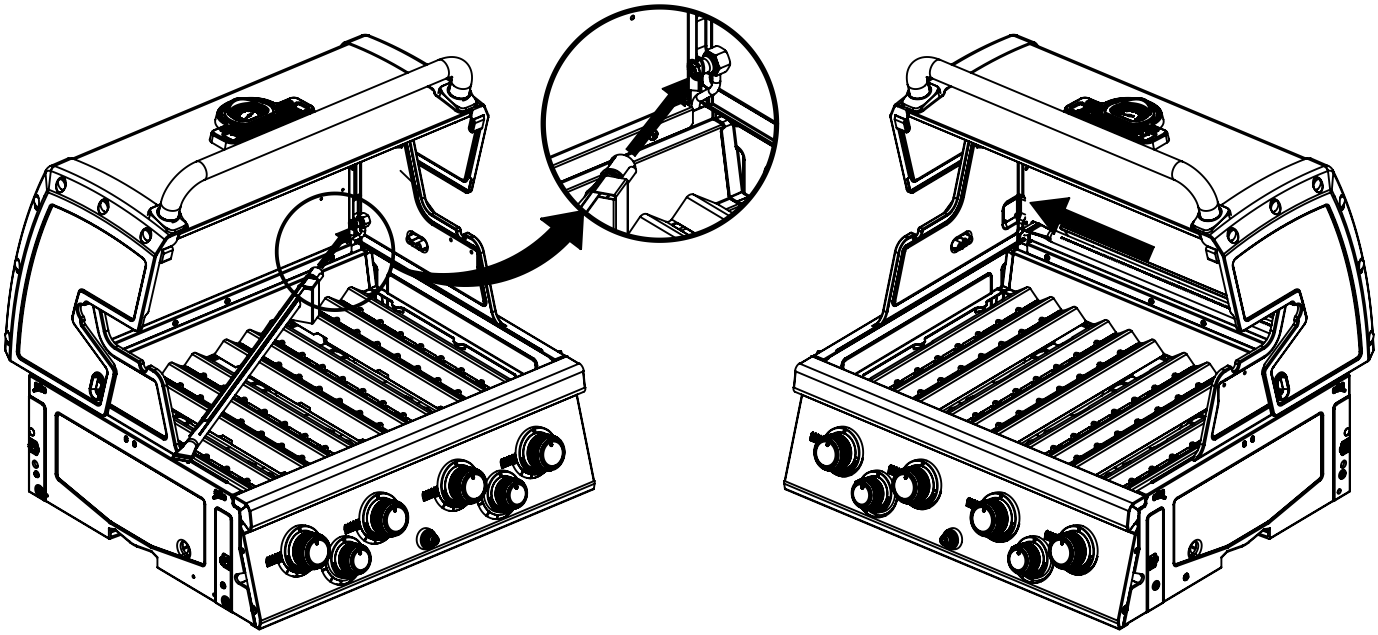

17	(2) 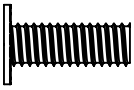 (2) 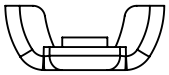

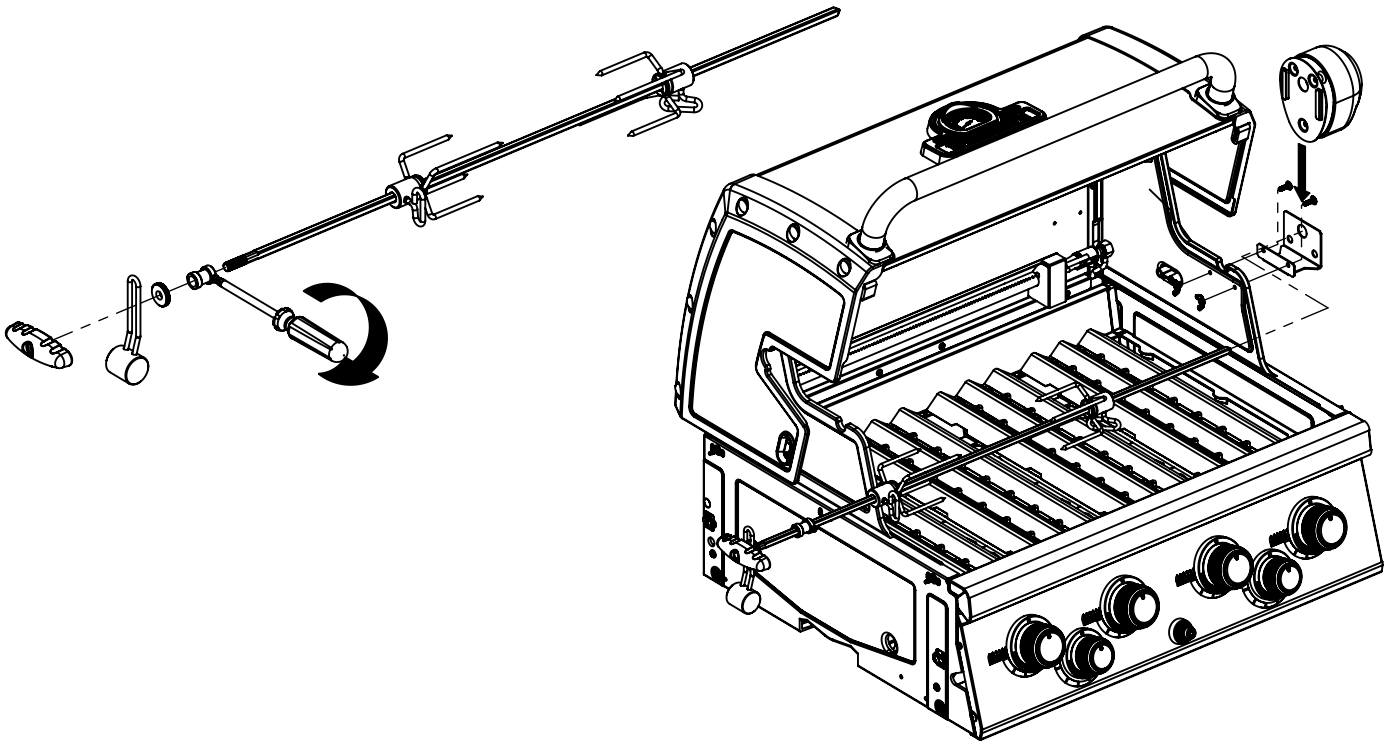

PARTS LIST / LISTE DES PIECES

KEY #	ITEM #	DESCRIPTION	DESCRIPTION	6561-54	6561-57	6561-64	6561-67	6561-84	6561-87	6565-84	6565-87
1	87109-931	PANEL - SIDE LEFT	PANNEAU - CÔTE GAUCHE	1	1	1	1	1	1	1	1
2	87109-911	PANEL - SIDE RIGHT	PANNEAU - CÔTE DROITE	1	1	1	1	1	1	1	1
3	27205-011	PANEL - FRONT INNER	PANNEAU FRONTAL ARRIERE	1	1	1	1	1	1	1	1
4	27205-921	PANEL - INNER REAR	PANNEAU INTERIEUR ARRIERE	1	1	1	1	1	1	1	1
5	27245-904	GREASE SHIELD	PROTECTION CONTRE LA GRAISSE	1	1	1	1	1	1	1	1
6	27005-91	HEAT SHIELD	PROTECTION CONTRE LA CHALEUR	3	3	3	3	3	3	3	3
7	27235-024	BURNER SUPPORT BRACKET	SUPPORT BRÛLEUR	1	1	1	1	1	1	1	1
8	S21232	PUZZLE CLIP	CLIP DE FIXATION	4	4	4	4	4	4	4	4
10	82305-021R	PANEL - REAR COOKBOX	PANNEAU - RECIPIENT	•	•	•	•	•	•	1	1
	82305-024R	PANEL - REAR COOKBOX	PANNEAU - RECIPIENT	1	1	1	1	1	1	•	•
12	82315-021	PANEL - HOOD	PANNEAU DE LA CUVE	1	1	1	1	1	1	1	1
18	22005-181	GRID - PORCELAIN	GRILLE EN PORCELAINE	•	•	•	•	2	2	2	2
	22005-281	GRID - PORCELAIN	GRILLE EN PORCELAINE	4	4	4	4	•	•	•	•
20	22005-991	GRID - WARMING RACK	GRILLE - MAINTIEN AU CHAUD	1	1	1	1	1	1	1	1
22	22225-014	COLLECTOR BOX - FRONT LOWER	RECIPIENT - FRONTAL INFERIEUR	1	1	1	1	1	1	1	1
24	22215-014	COLLECTOR BOX - FRONT UPPER	RECIPIENT - FRONTAL SUPERIEUR	1	1	1	1	1	1	1	1
25	22909-104LP	BURNER	BRÛLEUR	4	•	4	•	4	•	4	•
	22909-104NG	BURNER	BRÛLEUR	•	4	•	4	•	4	•	4
26	22001-768	CONTROL KNOB	BOUTON DE CONTROLE	4	4	4	4	4	4	4	4
26A	22001-668	CONTROL KNOB	BOUTON DE CONTROLE	•	•	1	1	2	2	2	2
27	22002-268	CONTROL BEZEL	MONTURE DE CONTROLE	4	4	4	4	4	4	4	4
27A	22001-168	CONTROL BEZEL	MONTURE DE CONTROLE	•	•	1	1	2	2	2	2
28	22005-414	CONTROL COVER	PANNEAU DE CONTROLE	1	1	•	•	•	•	•	•
	22005-434	CONTROL COVER	PANNEAU DE CONTROLE	•	•	1	1	•	•	•	•
	22005-474	CONTROL COVER	PANNEAU DE CONTROLE	•	•	•	•	1	1	1	1
34	S13470-091	HOSE-SIDE BURNER LP	TUYAU DU BRULEUR LATERAL PL	1	•	1	•	1	•	1	•
	S13470-132	HOSE-SIDE BURNER NG	TUYAU DU BRULEUR LATERAL GN	•	1	•	1	•	1	•	1
34A	Y-11230	COTTER PIN	ATTACHE DE CHEVILLE	•	•	1	1	1	1	1	1
35	29005-014	CONTROL ASSEMBLY	SOUPAPE	1	•	•	•	•	•	•	•
	29005-017	CONTROL ASSEMBLY	SOUPAPE	•	1	•	•	•	•	•	•
	29005-034	CONTROL ASSEMBLY	SOUPAPE	•	•	1	•	•	•	•	•
	29005-037	CONTROL ASSEMBLY	SOUPAPE	•	•	•	1	•	•	•	•
	29005-074	CONTROL ASSEMBLY	SOUPAPE	•	•	•	•	1	•	1	•
	29005-077	CONTROL ASSEMBLY	SOUPAPE	•	•	•	•	•	1	•	1
36	10342-T18	ELECTRODE – SIDE BURNER	ELECTRODE – BRULEUR DE COTE	•	•	1	1	1	1	1	1
37	20809-957	TUBE-REAR BURNER ASSY	TUBE DE BRÛLEUR ARRIÈRE	•	•	•	•	1	1	1	1
38	Y-11990	HEX NUT	ÉCROU	•	•	•	•	1	1	1	1
40	10114-20	HOSE & REGULATOR	TUYAU ET REGULATEUR PL	1	•	1	•	1	•	1	•
	10111-K45	HOSE NATURAL GAS	TUYAU (GAZ NATUREL)	•	1	•	1	•	1	•	1
43	10342-E13	ELECTRODE	ELECTRODE	2	2	2	2	2	2	2	2
44	10342-245	ELECTRONIC IGNITOR	ALLUMAGE ÉLECTRONIQUE	1	1	•	•	•	•	•	•
	10342-246	ELECTRONIC IGNITOR	ALLUMAGE ÉLECTRONIQUE	•	•	1	1	•	•	•	•
	10342-247	ELECTRONIC IGNITOR	ALLUMAGE ÉLECTRONIQUE	•	•	•	•	1	1	1	1
47	21035-991	GREASE RAIL	GUIDE DU BAC A GRAISSE	2	2	2	2	2	2	2	2
48	22009-901	GREASE PAN	CUVETTE A GRAISSE	1	1	1	1	1	1	1	1
49	27055-901	GREASE TRAY	PLATEAU A GRAISSE	1	1	1	1	1	1	1	1
51	22209-901	FLAV-R-WAVE ®	FLAV-R-WAVE ®	4	4	4	4	4	4	4	4
52	86101-631	LID SIDE PANEL - LEFT	PANNEAU LATERAL - GAUCHE	1	1	1	1	1	1	1	1
53	86101-611	LID SIDE PANEL - RIGHT	PANNEAU LATERAL - DROITE	1	1	1	1	1	1	1	1
54	86305-611	LID - OUTER PANEL	COUVERCLE - PANNEAU EXTERIEUR	1	1	1	1	1	1	•	•
	86305-614	LID - OUTER PANEL	COUVERCLE - PANNEAU EXTERIEUR	•	•	•	•	•	•	1	1
55	86205-61	LID - INNER PANEL	COUVERCLE - PANNEAU INTERIEUR	1	1	1	1	1	1	1	1
56	24005-12A	HANDLE	POIGNÉE	1	1	1	1	1	1	1	1
57	54009-936	BEZEL - HANDLE	MONTURE DE POIGNÉE	2	2	2	2	2	2	2	2
59	44089-60	NAMEPLATE	PLAQUE D'IDENTIFICATION	1	1	1	1	1	1	1	1
60	10571-6	HEAT INDICATOR	INDICATEUR DE CHALEUR	1	1	1	1	1	1	1	1
65	20005-000	MATCH LIGHT - STICK	ALLUMETTES	1	1	1	1	1	1	1	1
68	21175-111A	DOOR	PORTE	1	1	1	1	1	1	•	•
	22275-114A	DOOR	PORTE	•	•	•	•	•	•	1	1
69	21175-131A	DOOR	PORTE	1	1	1	1	1	1	•	•
	22275-134A	DOOR	PORTE	•	•	•	•	•	•	1	1
70	21071-13	HANDLE	POIGNÉE	2	2	2	2	2	2	2	2

PARTS LIST / LISTE DES PIECES

KEY #	ITEM #	DESCRIPTION	DESCRIPTION	6561-54	6561-57	6561-64	6561-67	6561-84	6561-87	6565-84	6565-87
71	21070-13	BEZEL - HANDLE	MONTURE DE POIGNÉE	4	4	4	4	4	4	4	4
78	21335-115	BRACKET - DOOR CATCH	PARENTHÈSE - CROCHET DE PORTE	1	1	1	1	1	1	1	1
80	21109-905R	SIDE PANEL	PANNEAU LATERALE	2	2	2	2	2	2	2	2
88	21305-925R	PANEL - REAR	PANNEAU - ARRIÈRE	1	1	1	1	1	1	1	1
90	51795-945	BASE	TABLETTE INFERIEURE	1	•	1	•	1	•	1	•
	51795-955	BASE	TABLETTE INFERIEURE	•	1	•	1	•	1	•	1
100	21039-911	BRACKET – CASTOR SUPPORT	SUPPORT DE ROULLETTE	2	2	2	2	2	2	2	2
102	10892-23	CASTOR	ROULETTES	4	4	4	4	4	4	4	4
103	21009-905	TANK BRACKET	SUPPORT DU RESERVOIR	1	•	1	•	1	•	1	•
110	23030-635	SHELF BRACKET	CROCHETS PLATEAU	2	2	2	2	2	2	2	2
111	23030-615	SHELF BRACKET	CROCHETS PLATEAU	2	2	2	2	2	2	2	2
112	20409-934	STRAP - HANDLE	COURROIE - POIGNÉE	2	2	2	2	2	2	2	2
114	23101-614	SHELF	PLANCHETTE LATERALE	2	2	1	1	1	1	1	1
115	23100-654	SHELF	PLANCHETTE LATERALE	•	•	1	1	1	1	1	1
116	23401-631	SHELF FRONT	PLANCHETTE FRONTALE	1	1	1	1	1	1	1	1
116A	23401-611	SHELF FRONT	PLANCHETTE FRONTALE	1	1	1	1	1	1	1	1
117	23009-608	HANDLE	POIGNEE	2	2	2	2	2	2	2	2
124	23000-271	SIDE BURNER BODY	SUPPORT DE BRULEUR DE COTE	•	•	1	1	1	1	1	1
125	23000-254	SIDE BURNER COVER	COUVERCLE LATÉRAL	•	•	1	1	1	1	1	1
126	23909-20	SIDE BURNER	BRULEUR DE COTE	•	•	1	1	1	1	1	1
128	23009-98	GRID	GRILLE	•	•	1	1	1	1	1	1
130	27905-354	BURNER ROTISSERIE	BRÛLEUR DE TOURNEBROCHE	•	•	•	•	1	1	1	1
131	10693-109	REAR BURNER-ORIFICE	ORIFICE DU BRÛLEUR ARRIÈRE	•	•	•	•	1	•	1	•
	10693-160	REAR BURNER-ORIFICE	ORIFICE DU BRÛLEUR ARRIÈRE	•	•	•	•	•	1	•	1
133	S15271	HANDLE	POIGNEE	•	•	•	•	1	1	1	1
134	S15270	BALANCER	CONTREPOIS	•	•	•	•	1	1	1	1
135	S15299	WASHER	RONDELLE	•	•	•	•	1	1	1	1
136	S15263	BUSHING	COL	•	•	•	•	1	1	1	1
137	S15256	SPIT ROD	BROCHETTE	•	•	•	•	1	1	1	1
138	S15287	4 PRONG FORKS	FOURCHETTE A 4 FOURCHON	•	•	•	•	2	2	2	2
139	27039-901	ROTISSERIE BRACKET	SUPPORT	•	•	•	•	1	1	1	1
140	S21125	SCREW #8 X 1/2	VIS #8 X 1/2	18	18	18	18	18	18	18	18
141	Y-12860	BOLT - 1/4-20 X 1	BOULON 1/4-20 X 1	6	6	6	6	6	6	6	6
143	Y-12855	BOLT 1/4-20 X 3/8	BOULON 1/4-20 X 3/8	52	52	52	52	52	52	52	52
144	Y-12220	BUSHING	DOUILLE	•	•	1	1	1	1	1	1
145	S21235	HINGE PIN	GOUPILLE DE CHARNIÈRE	2	2	2	2	2	2	2	2
146	S21233	HITCH PIN CLIP	ATTACHE DE CHEVILLE	2	2	2	2	2	2	2	2
147	Y-11231	LID BUMPER	BUTOIR DU COUVERCLE	2	2	2	2	2	2	2	2
147A	SP11-25	LID BUMPER	BUTOIR DU COUVERCLE	2	2	2	2	2	2	2	2
148	10240-20	DOOR PIN	GOUPILLE DE LA PORTE	1	1	1	1	1	1	1	1
149	10240-19	DOOR PIN	GOUPILLE DE LA PORTE	1	1	1	1	1	1	1	1
150	Y-12124	DOOR PIN CAP	DISTANZHALTERUNG	1	1	1	1	1	1	1	1
152	Y-12222	MAGNET	AIMANT	2	2	2	2	2	2	2	2
153	Y-12223	SNAP IN MAGNET	AIMANT	2	2	2	2	2	2	2	2
154	Y-11560	SCREW 1/4-20 X 1-1/2	VIS 1/4-20 X 1-1/3	4	4	4	4	4	4	4	4
155	S21124	SCREW #8 X 1/2	VIS #8 X 1/2	14	14	15	15	16	16	16	16
156	Y-11793	NUT 1/4-20	ECROU 1/4-20	20	20	20	20	20	20	20	20
157	Y-12835	SCREW #6-32 X 1/4	VIS #6-32 X 1/5	•	•	3	3	3	3	3	3
158	Y-12646	SCREW SHOULDER #8 X 1/2	VIS SHOULDER #8 X 1/3	•	•	2	2	2	2	2	2
160	Y-29304	BOLT #10-24 X 3/8	BOULON #10-24 X 3/8	35	35	35	35	35	35	35	35
161	Y-29310	BOLT #10-24 X 3/4	BOULON #10-24 X 3/4	4	4	4	4	4	4	4	4
163	S35094	SCREW #10-24 X 5/8	VIS #10-24 X 5/8	13	13	13	13	13	13	13	13
165	Y-12127	DOOR PIN CLIP	LE TROMBONE D'EPINGLE DE PORTE	2	2	2	2	2	2	2	2
167	Y-11987	BOLT 1/4-20 X 1	BOULON 1/4-20 X 1	16	16	16	16	16	16	16	16
169	S21061	WING NUT	ECROU PAPILLON	•	•	•	•	2	2	2	2
171	S15245	MOTOR	MOTEUR	•	•	•	•	1	1	1	1
173	Y-11598	WING NUT - 1/4	ECROU PAPILLON - 1/4	1	•	1	•	1	•	1	•
174	S21255	WASHER	RONDELLE	1	•	1	•	1	•	1	•
175	S21141	CARRIAGE BOLT - 1/4:20 X 5/8	BOULON - 1/4:20 X 5/8	1	•	1	•	1	•	1	•
176	S21362	SPRING	RESSORT	•	•	•	•	1	1	1	1
180	S35095	BOLT #10-24 X 3/8	BOULON #10-24 X 3/8	•	•	•	•	1	1	1	1

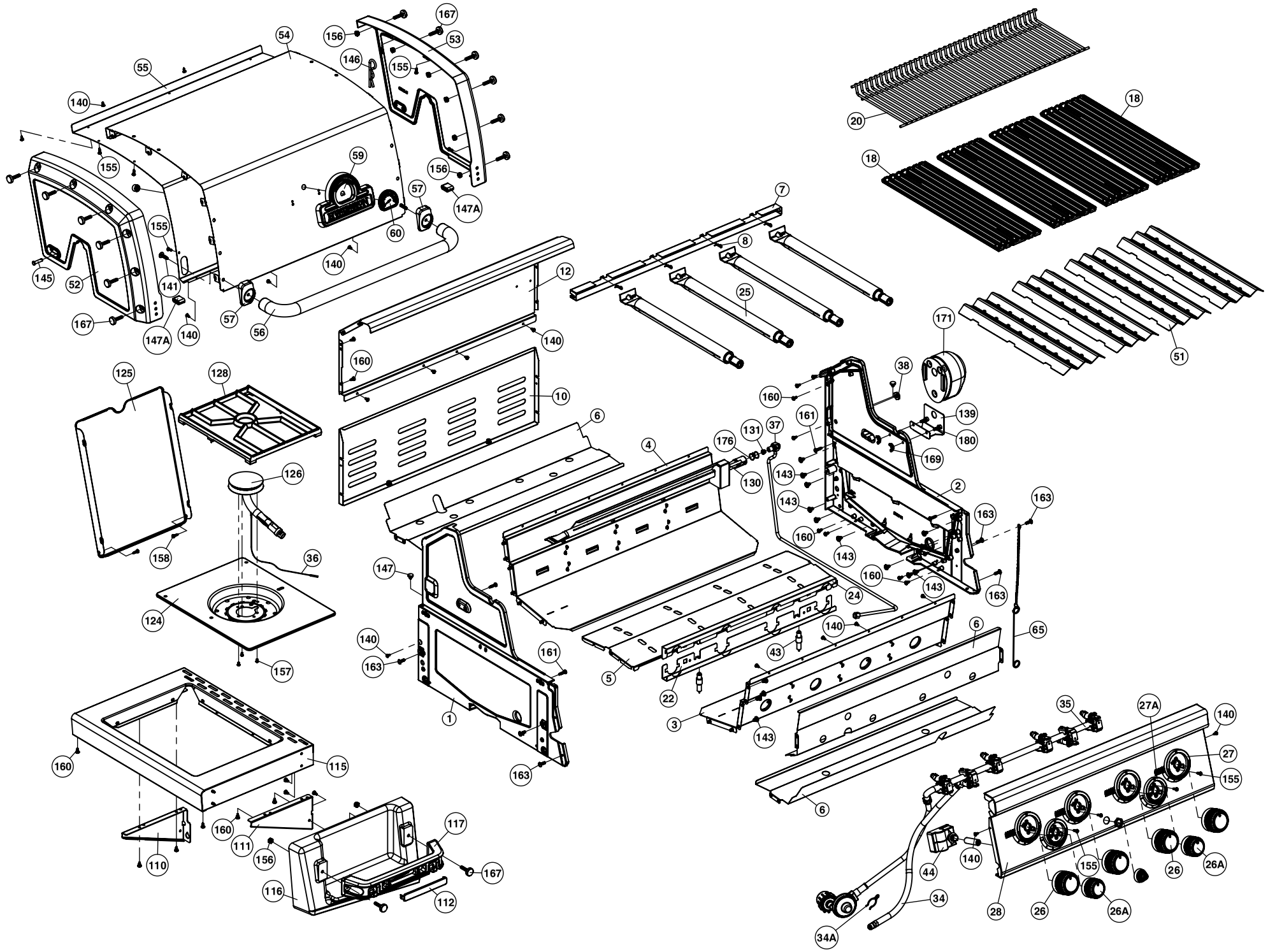

167
156
53
54
146
155
55
140
155
59
156
57
147A
155
60
140
145
52
141
167
147A
140
57
56
12
140
160
10
6
125
128
126
158
36
124
157
147
140
163
161
1
163
160
115
160
111
156
110
117
167
116
112
7
8
25
171
38
160
139
161
180
37
131
176
4
169
130
143
143
2
163
163
160
143
160
143
163
24
140
6
65
43
5
22
3
143
6
35
27A
140
27
155
155
26
26A
44
140
34
28
26
26A
34A
20
18
18
51

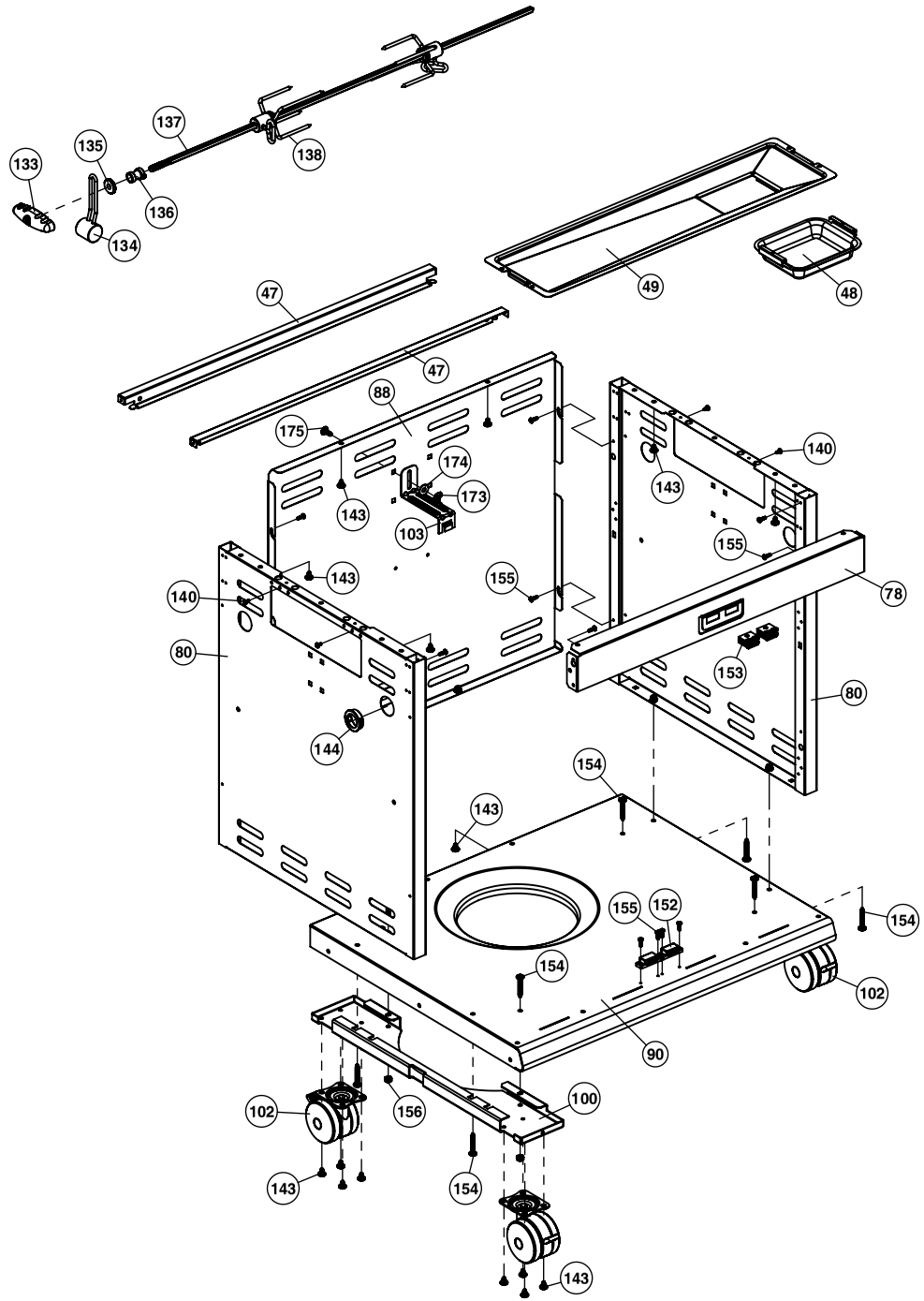
133
135
137
138
136
134
47
49
48
47
88
175
174
173
143
103
140
143
155
143
140
155
78
80
153
80
144
154
143
155
152
154
154
102
90
102
156
100
143
154
143

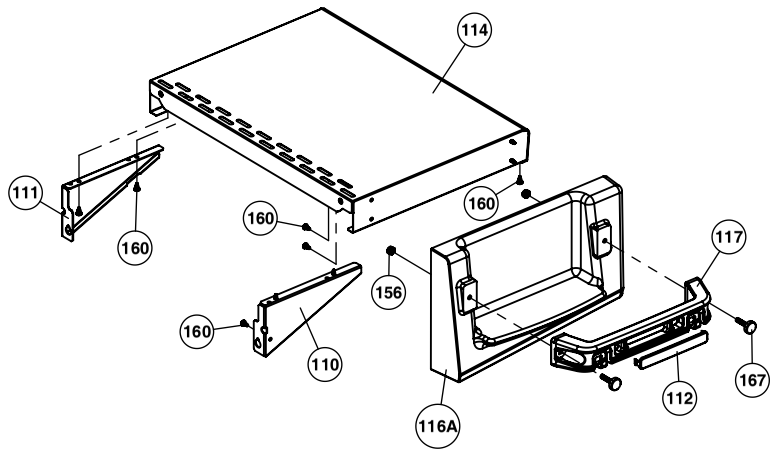
114
111
160
160
160
160
156
117
160
110
167
112
116A

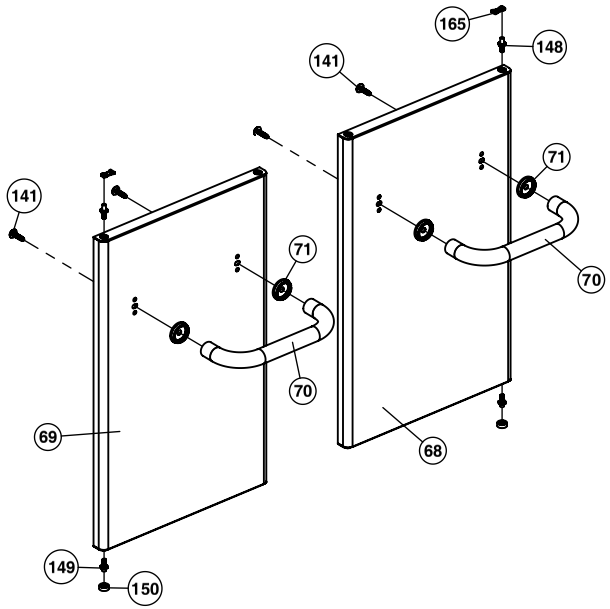
165
148
141
71
141
71
70
70
69
68
149
150