ASSEMBLY/ ARMADO

NOTE: DO NOT over tighten screws and washers that come into contact with porcelain coated surfaces. Over tightening may cause the porcelain coating to crack and break, resulting in exposed metal that will be prone to rust.

Nota: NO apriete demasiado los tornillos y arandelas que entren en contacto con las superficies revestidas de porcelana. Si los aprieta demasiado, se puede quebrar y romper el revestimiento de porcelana lo que dejará expuesto el metal al proceso de oxidación.

1

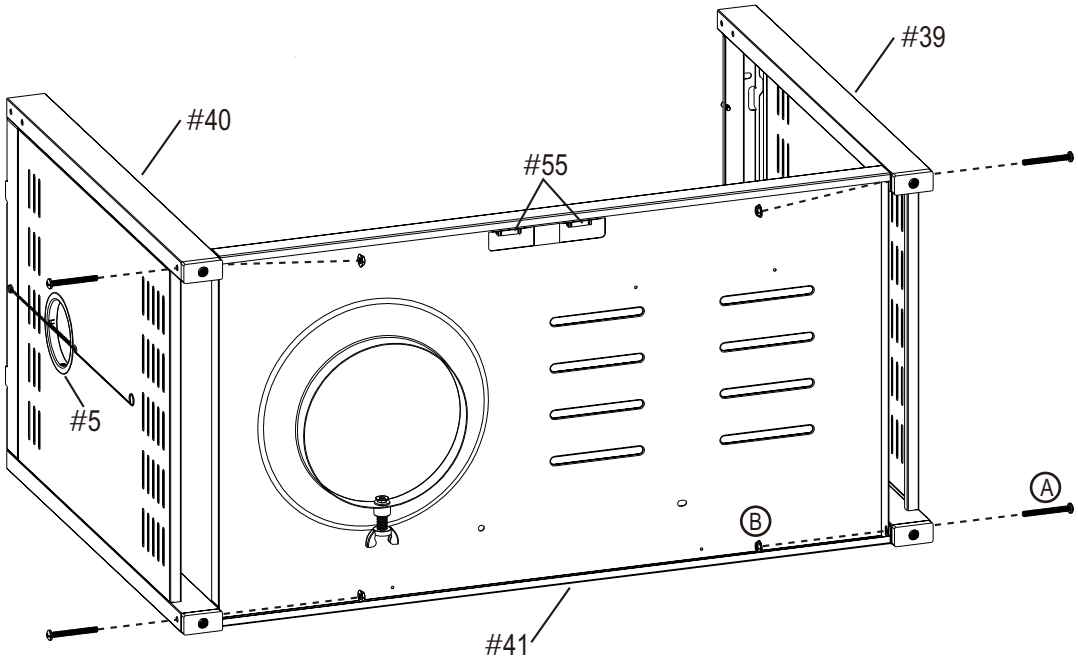

1/4-20X2-3/8" Machine Screw
Qty: 4
Tornillo para metales
de 1/4-20 x 2-3/8"
Cant. 4

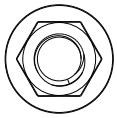

1/4-20 Flange Nut
Qty: 4
Tuerca con brida de 1/4-20
Cant. 4

2

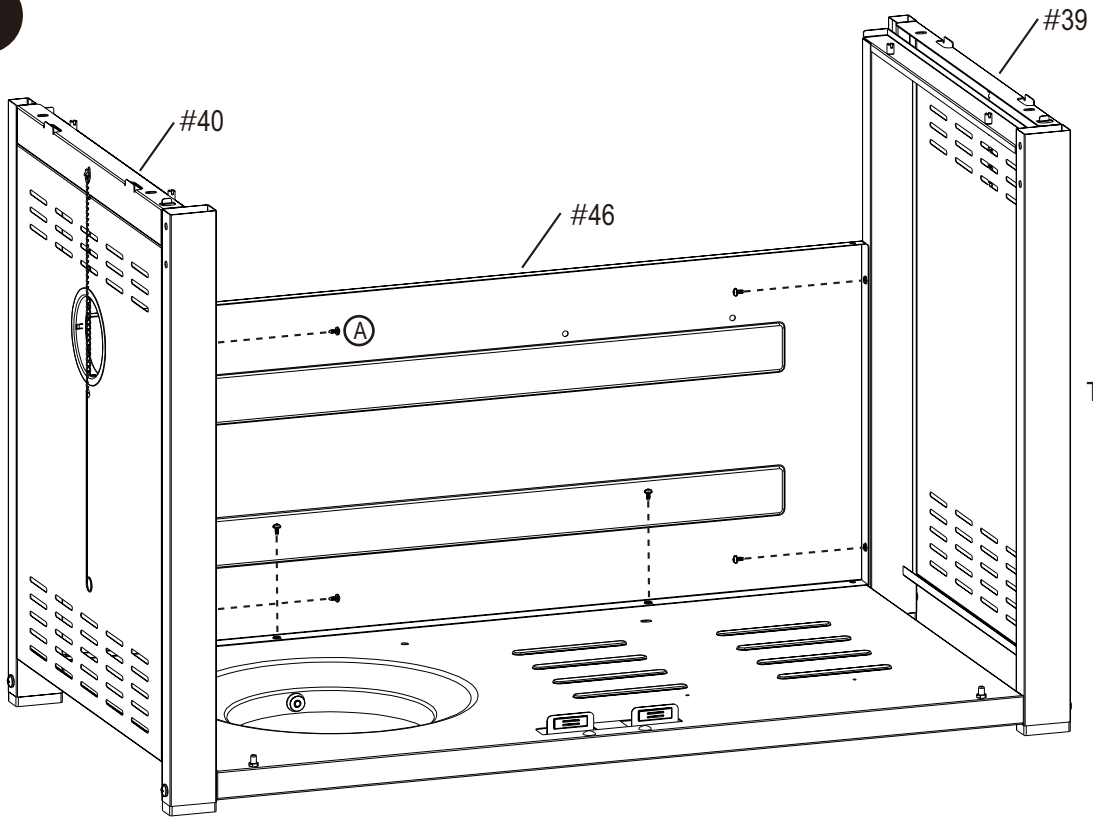

#8X3/8" Sheet Metal Screw
Qty: 6
Tornillo para láminas metálicas
No. 8 de 3/8"
Cant. 6

3

Ⓐ

#8X3/8" Sheet Metal Screw
Qty: 2
Tornillo para láminas metálicas
No. 8 de 3/8"
Cant. 2

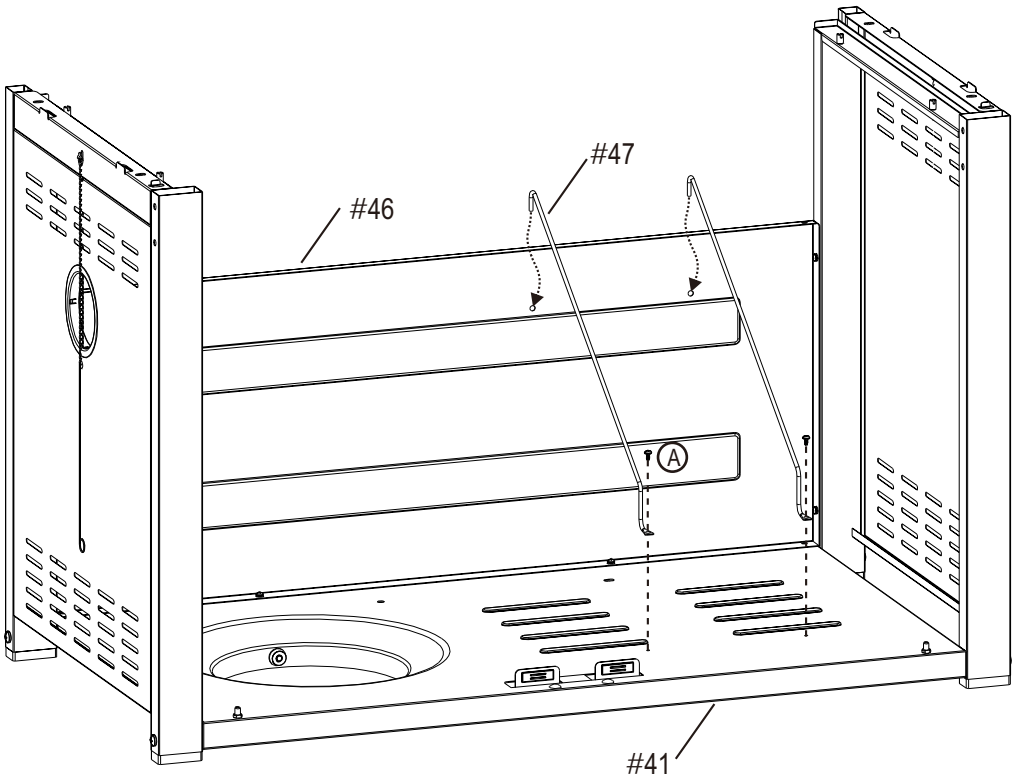

4

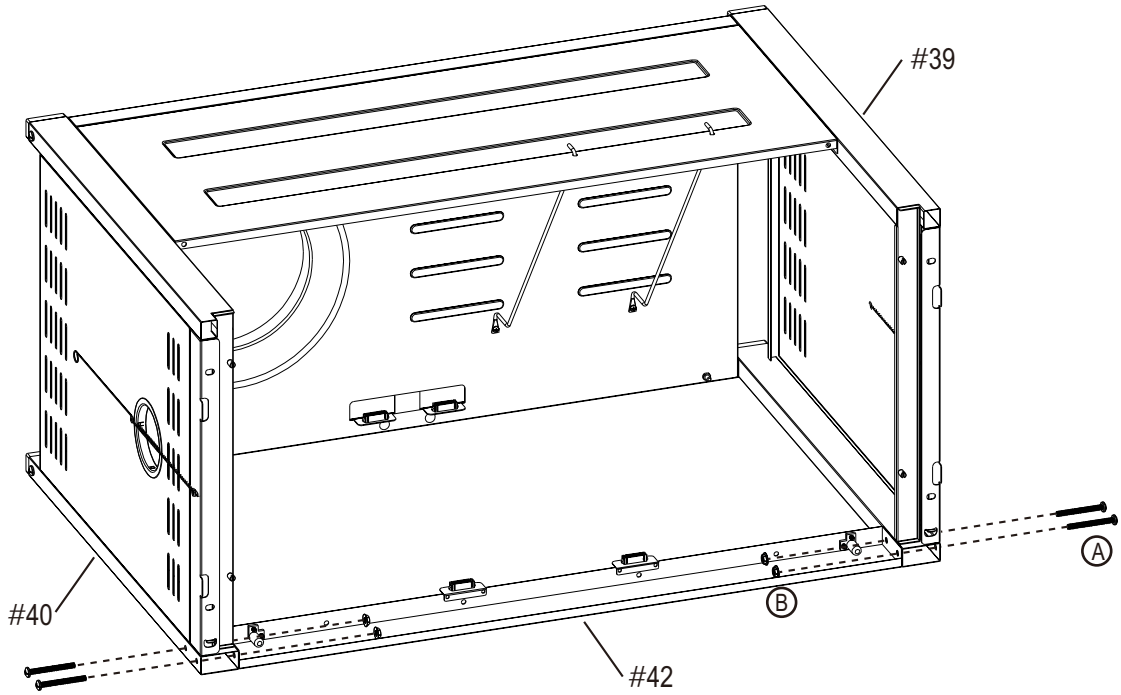

Ⓐ

1/4-20X2-3/8" Machine Screw
Qty: 4
Tornillo para metales
de 1/4-20 x 2-3/8"
Cant. 4

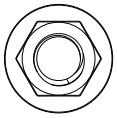

Ⓑ

1/4-20 Flange Nut
Qty: 4
Tuerca con brida de 1/4-20
Cant. 4

5

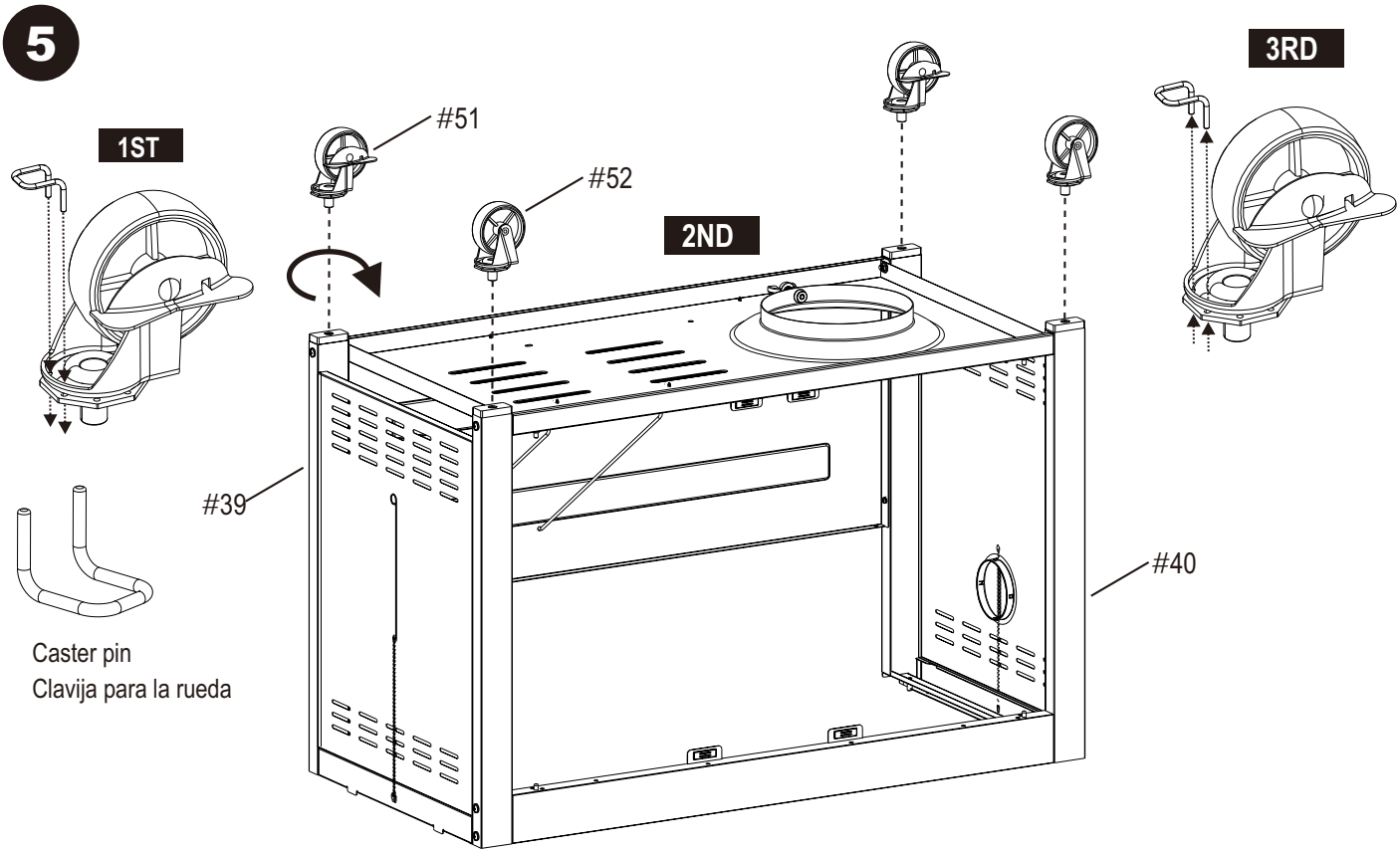

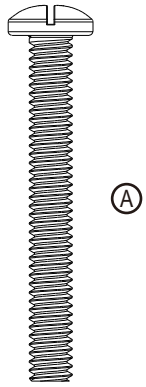

1/4-20X2" Machine Screw
Qty: 2
Tornillo para metales
de 1/4-20 x 2"
Cant. 2

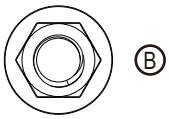

1/4-20 Flange Nut
Qty: 2
Tuerca con brida de 1/4-20
Cant. 2

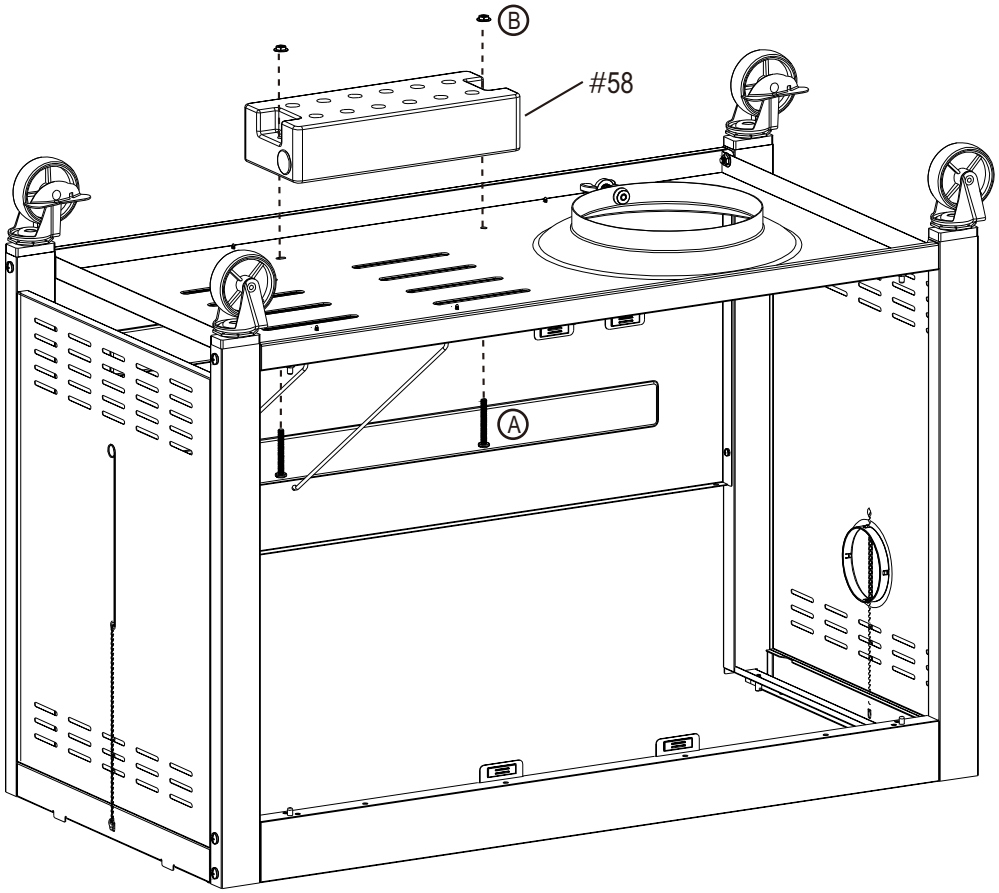

6

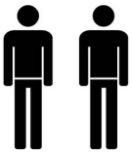

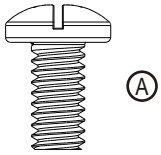

1/4-20X1/2" Screw
Qty: 4

Tornillos para metales de
1/4 - 20 x ½"
Cant. 4

Right side panel removed for clarity
Para mayor claridad, no se ilustra el panel del lado derecho

#14
#8
#39
A
#40

7

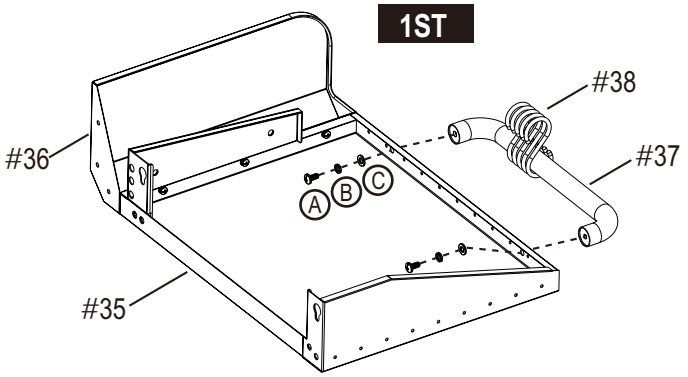

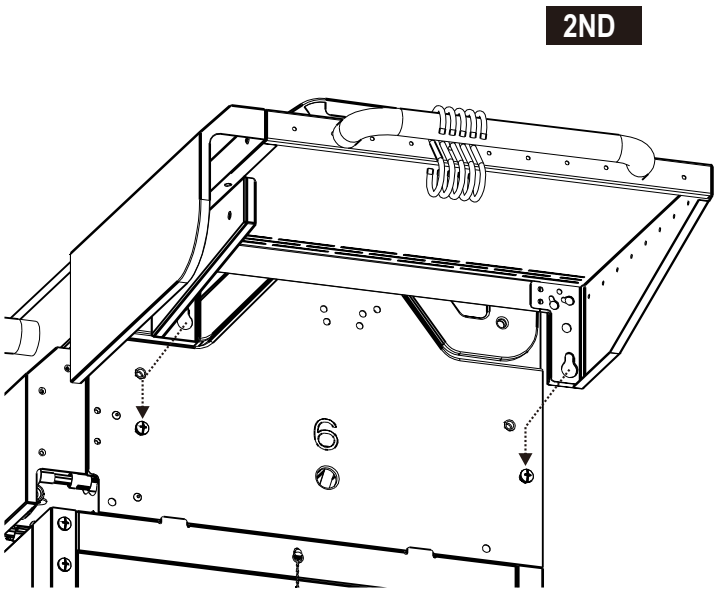

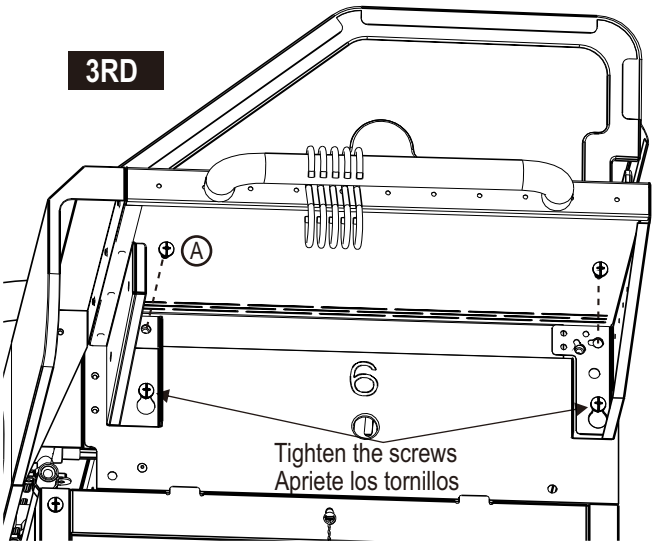

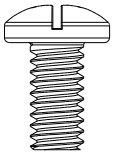

A

1/4-20X1/2" Screw
Qty: 4
Tornillos para metales de
1/4 - 20 x ½"
Cant. 4

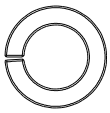

B

7mm Lock Washer
Qty: 2
Arandela de presión
de 7 mm
Cant. 2

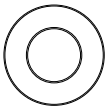

C

7mm Flat Washer
Qty: 2
Arandela plana de 7 mm
Cant. 2

8

A

#8X3/8" Sheet Metal Screw
Qty: 3
Tornillo para láminas metálicas
No. 8 de 3/8"
Cant. 3

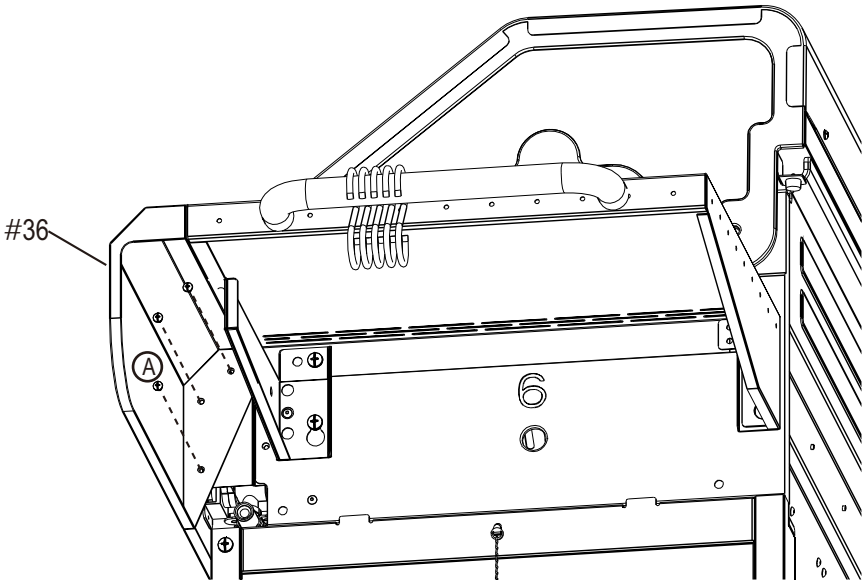

9

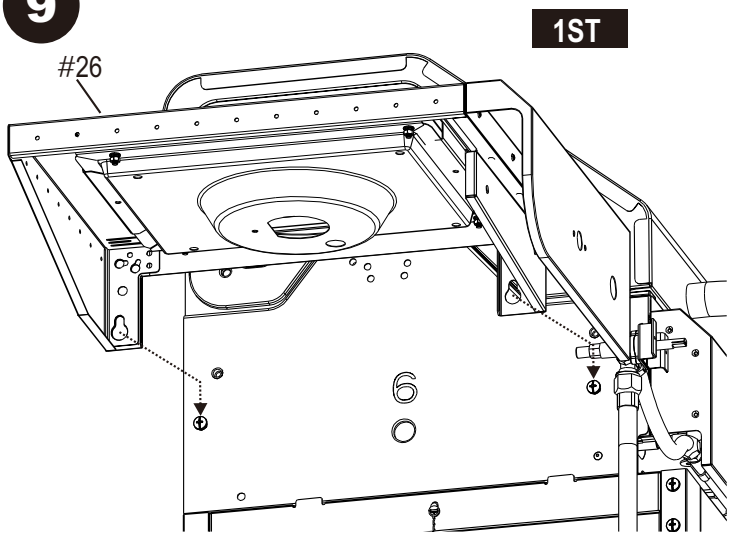

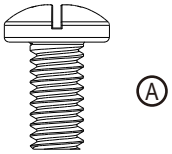

1/4-20X1/2" MachineScrew
Qty: 2
Tornillos para metales de
1/4 - 20 x ½"
Cant. 2

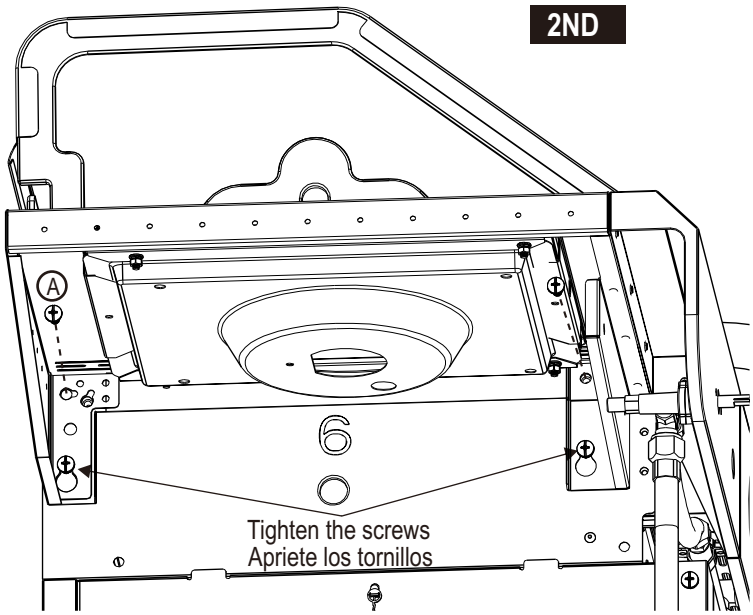

10

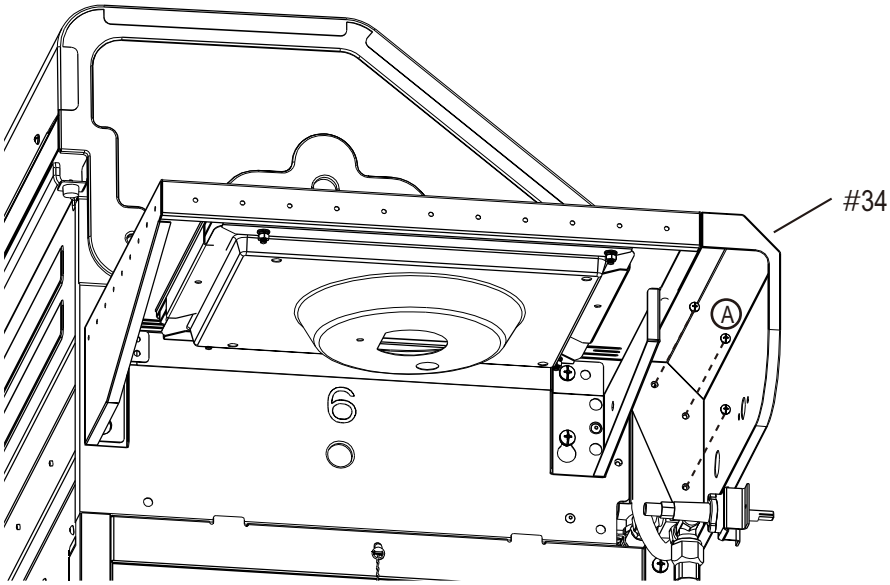

#8X3/8" Sheet Metal Screw
Qty: 3
Tornillo para láminas metálicas
No. 8 de 3/8"
Cant. 3

11

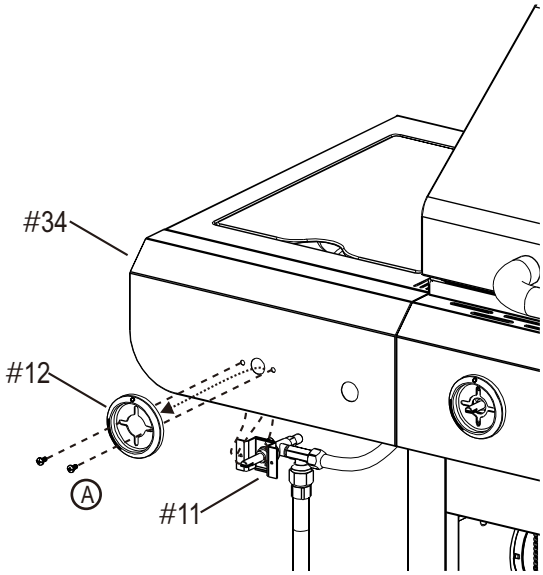

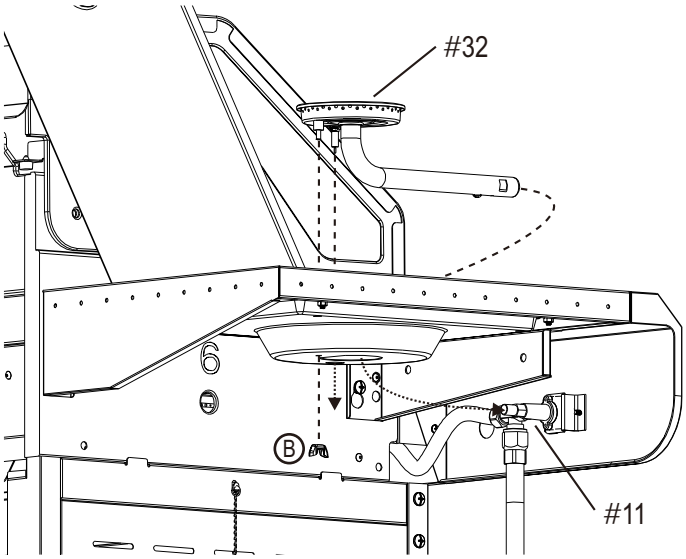

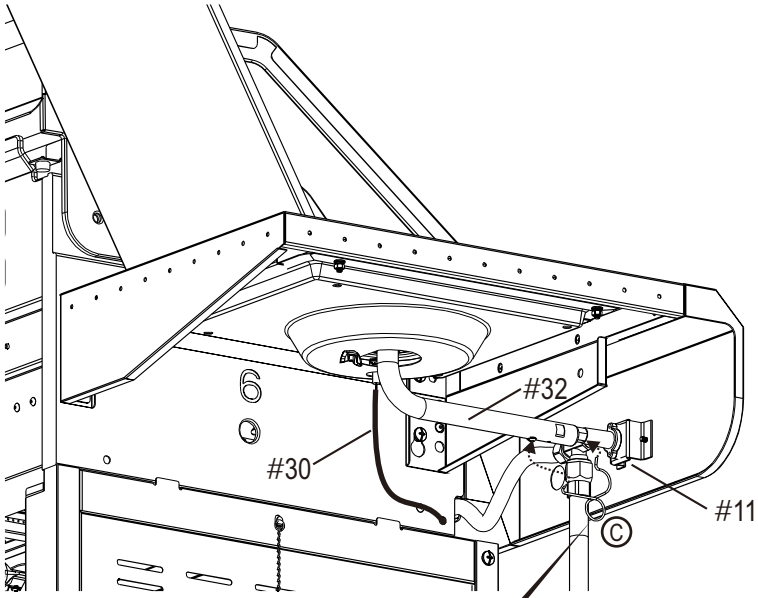

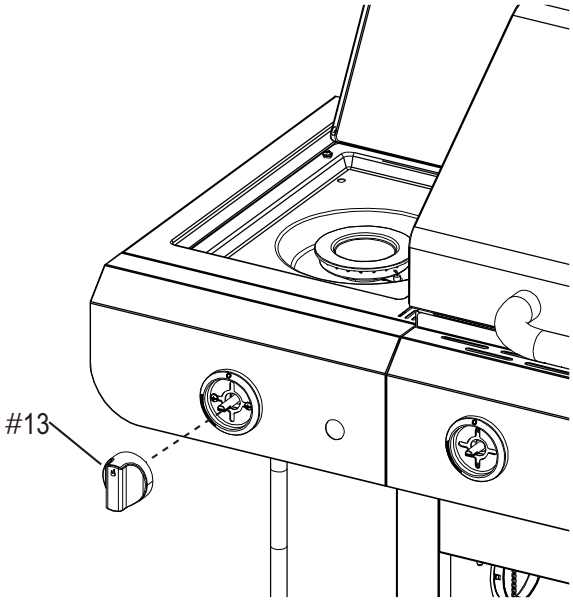

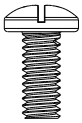

Ⓐ

#8-32X3/8"
Stainless Steel Screw
Qty: 2
Tornillo autorroscante
No. 8-32 de 3/8"
Cant. 2

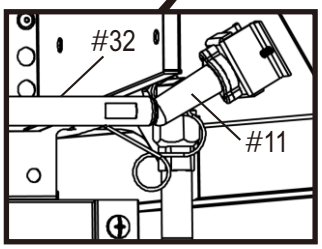

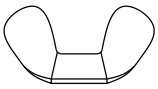

Ⓑ

Wing Nut
Qty. 1
Tuerca de mariposa
Cant. 1

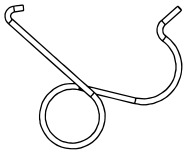

Ⓒ

Venturi Clip
Qty: 1
Presilla para el quemador
Cant. 1

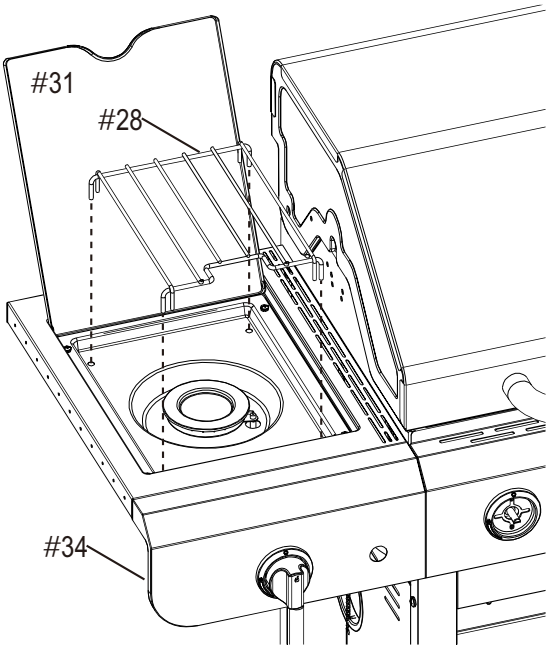

12

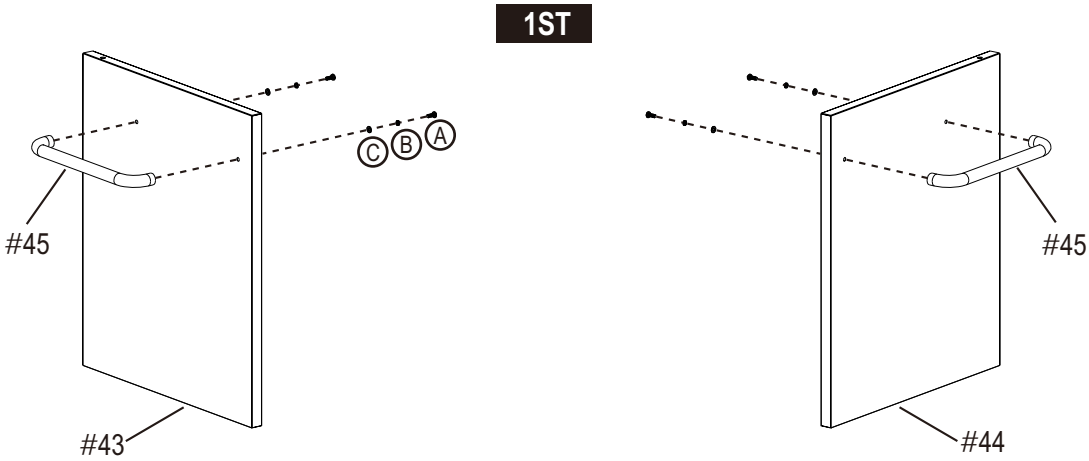

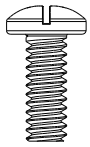

Ⓐ

#10-24X1/2" Machine Screw
Qty: 4
Tornillo para metales
No.10-24 de 1/2"
Cant. 4

Ⓑ

5mm Lock Washer
Qty: 4
Arandela de presión de 5 mm
Cant. 4

Ⓒ

5mm Flat Washer
Qty: 4
Arandela plana de 5 mm
Cant. 4

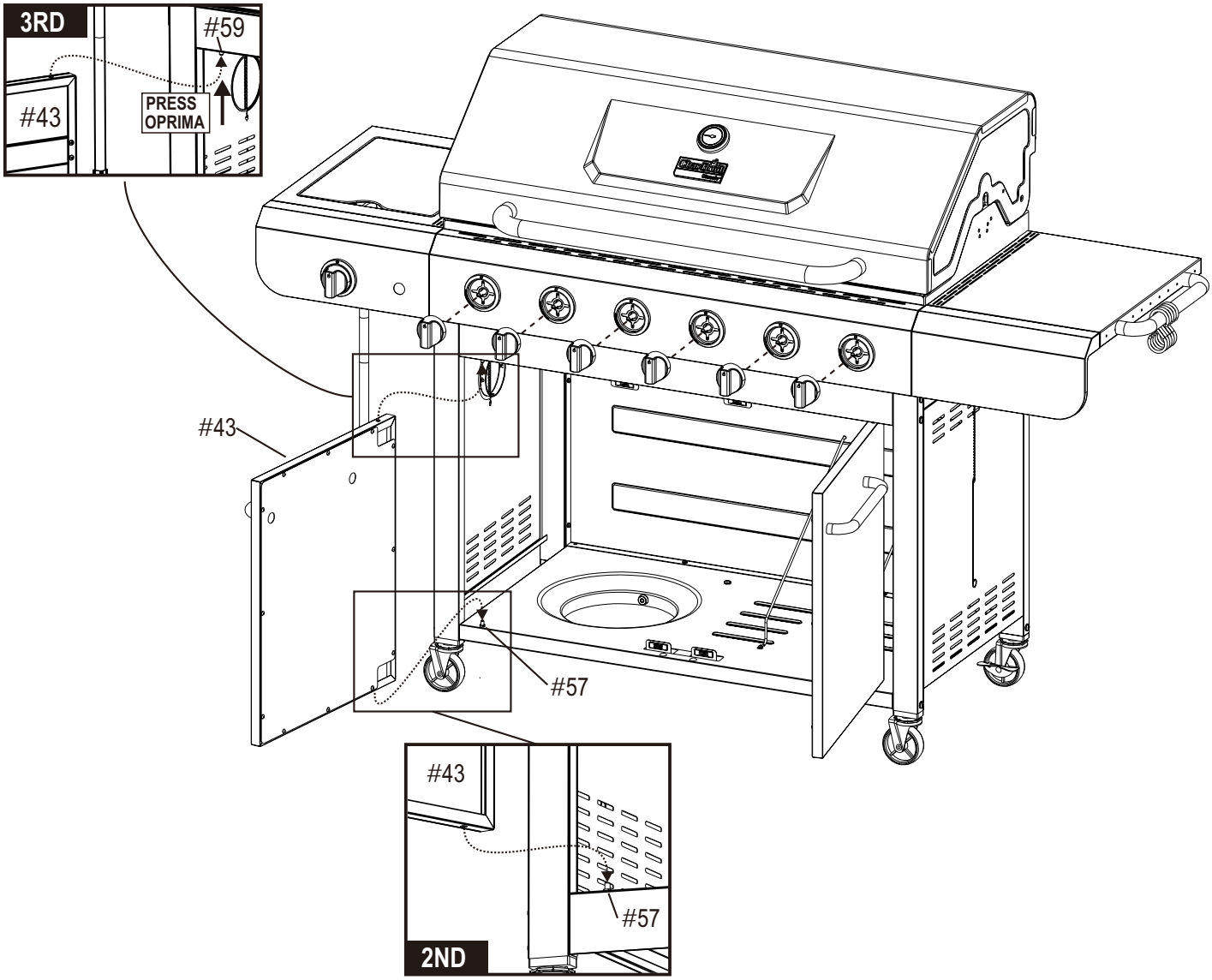

13

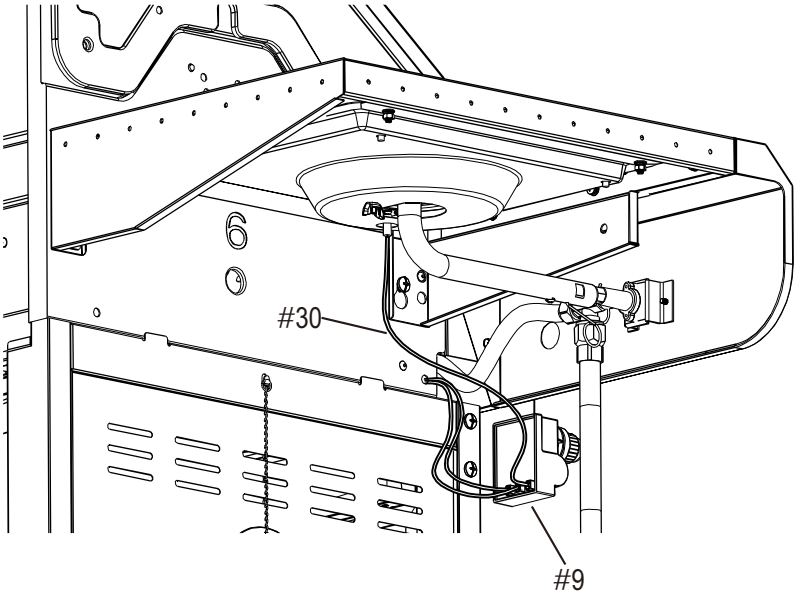

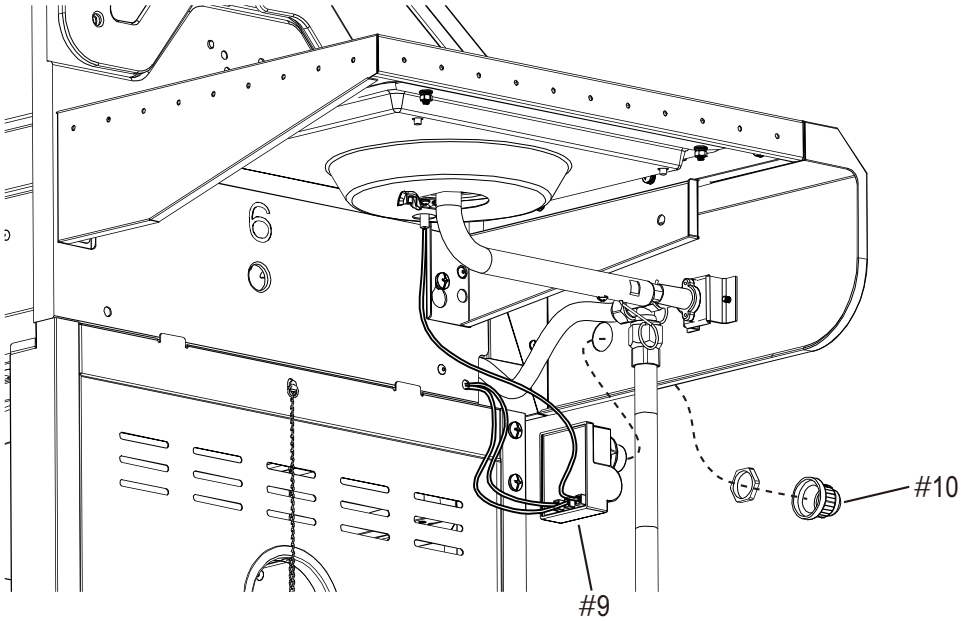

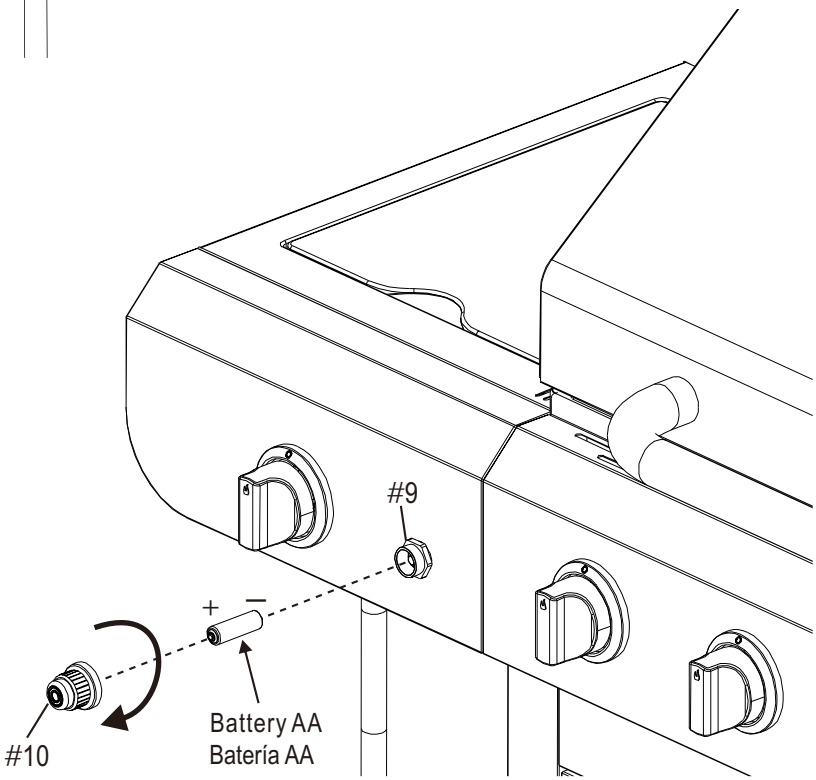

14

#8X3/8" Sheet Metal Screw
Qty: 2
Tornillo para láminas metálicas
No. 8 de 3/8"
Cant. 2

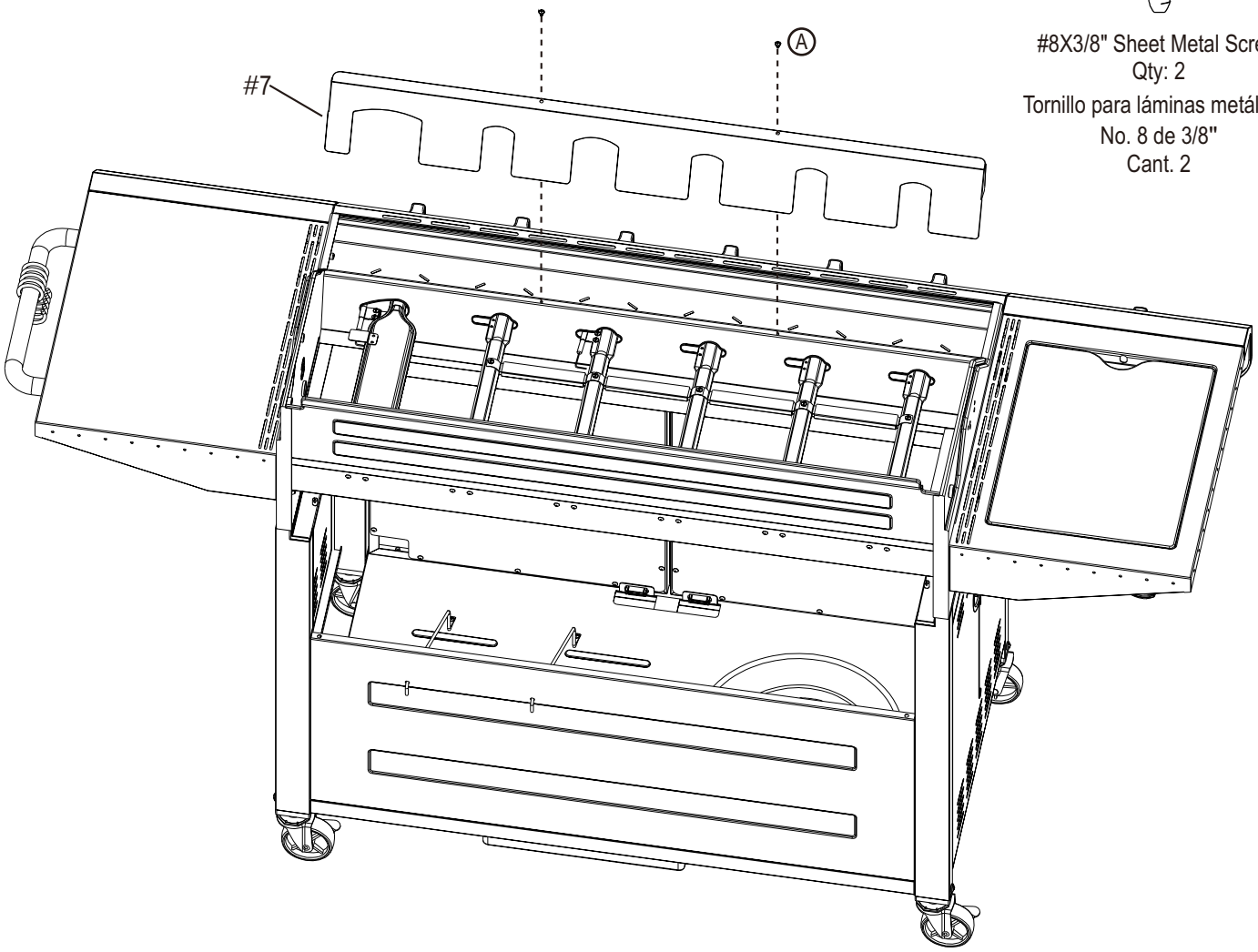

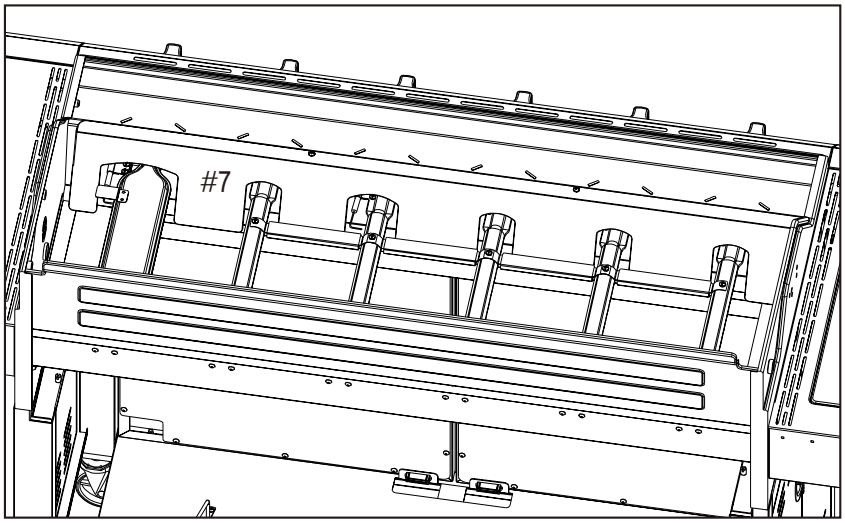

15

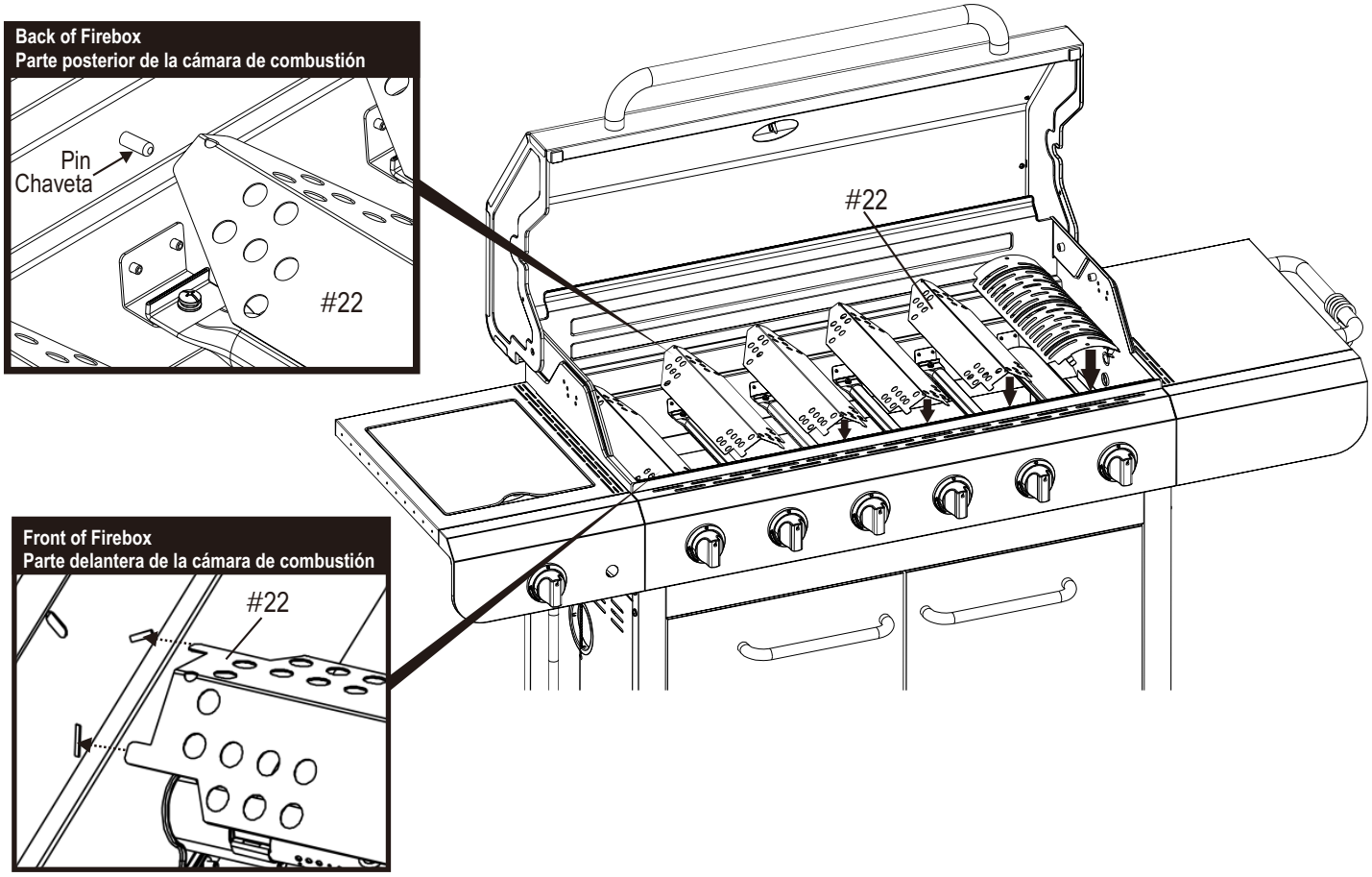
Back of Firebox
Parte posterior de la cámara de combustión
Pin
Chaveta
#22
#22
Front of Firebox
Parte delantera de la cámara de combustión
#22

16

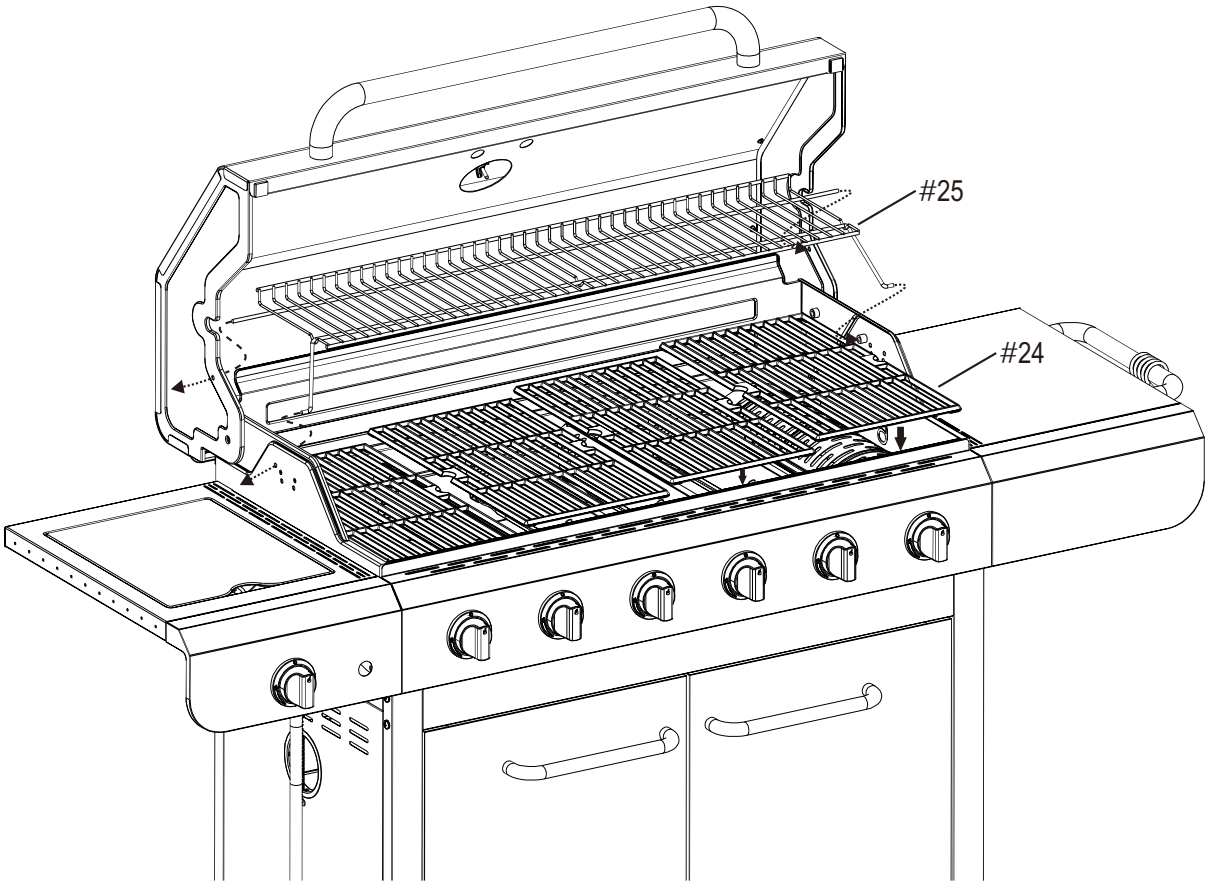
#25
#24

17

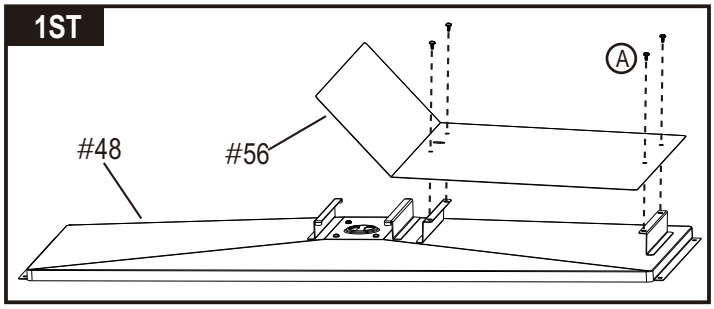

#8X3/8" Sheet Metal Screw
Qty: 4
Tornillo para láminas metálicas
No. 8 de 3/8"
Cant. 4

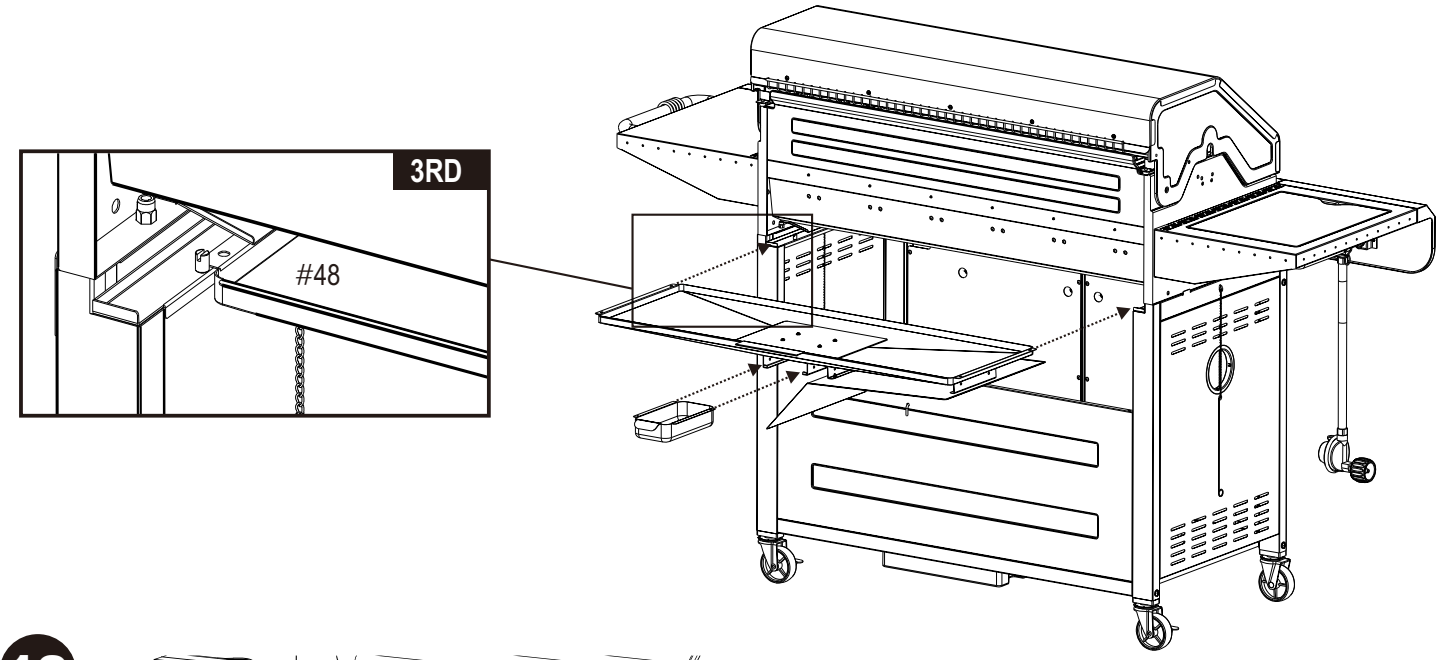

18

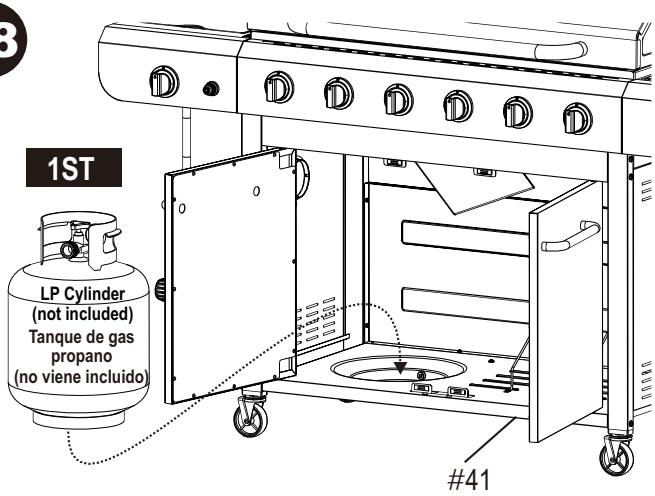

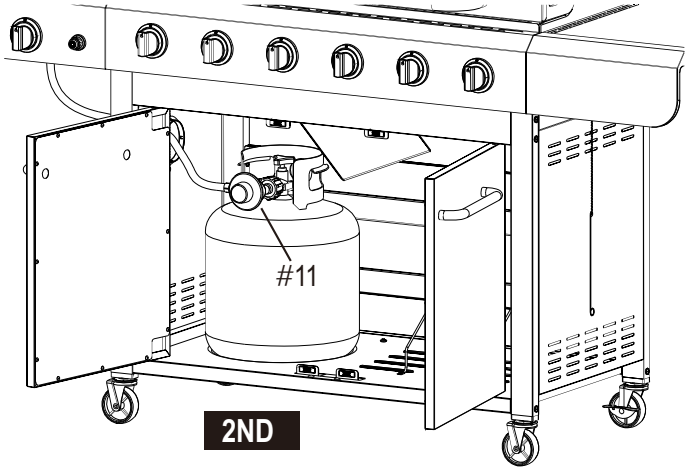

CAUTION

Cylinder valve must face to front of cart once tank is attached. Failure to install cylinder correctly may allow gas hose to be damaged in operation, resulting in the risk of fire.

ADVERTENCIA

Una vez que el tanque haya quedado instalado, la válvula del tanque debe quedar orientada hacia la parte delantera del carrito. Si no se instala correctamente el tanque, se puede dañar la manguera de gas durante el suministro, lo que puede ocasionar el riesgo de incendio.

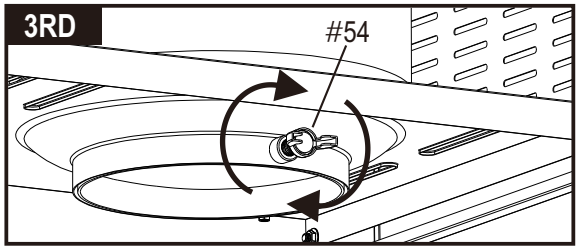

EMERGENCIES: **If a gas leak cannot be stopped, or a fire occurs due to gas leakage, call the fire department.**

Emergencies	Possible Cause	Prevention/Solution
Gas leaking from cracked/cut/burned hose.	• Damaged hose.	•Turn off gas at LP cylinder or at source on natural gas systems. Discontinue use of product and replace valve/hose/regulator. Once valve/hose/regulator replaced conduct complete leak check per manual.
Gas leaking from LP cylinder.	• Mechanical failure due to rusting or mishandling.	• Replace LP cylinder.
Gas leaking from LP cylinder valve.	• Failure of cylinder valve from mishandling or mechanical failure.	• Turn off LP cylinder valve. Return LP cylinder to gas supplier.
Gas leaking between LP cylinder and regulator connection.	• Improper installation, connection not tight, and/or failure of rubber seal.	• Turn off LP cylinder valve. Remove regulator from cylinder and visually inspect rubber seal for damage. See LP Cylinder Leak Test and Connecting Regulator to the LP Cylinder.
Fire coming through control panel.	• Fire in burner tube section of burner due to blockage.	• Turn off control knobs and LP cylinder valve. Leave lid open to allow flames to die down. After fire is out and grill is cold, remove burner and inspect for spider nests or rust. See Natural Hazard and Cleaning the Burner Assembly pages.
Grease fire or continuous excessive flames above cooking surface.	• Too much grease buildup in burner area.	• Turn off control knobs and LP cylinder valve. Leave lid open to allow flames to die down. After cooling, clean food particles and excess grease from inside firebox area, grease tray, and other surfaces.

Troubleshooting

Problem	Possible Cause	Prevention/Solution
Burner(s) will not light using ignitor. (See Electronic Ignition Troubleshooting also) *Continued on next page.*	**GAS ISSUES:**	
	• Trying to light wrong burner.	• See instructions on control panel and in Use and Care section.
	• Burner not engaged with control valve.	• Make sure valves are positioned inside of burner tubes.
	• Obstruction in burner.	• Ensure burner tubes are not obstructed with spider webs or other matter. See cleaning section of Use and Care.
	• No gas flow.	• Make sure LP cylinder is not empty. If LP cylinder is not empty, refer to "Sudden drop in gas flow."
	• Vapor lock at coupling nut to LP cylinder.	• Turn off knobs and disconnect coupling nut from LP cylinder. Reconnect and retry.
	• Coupling nut and LP cylinder valve not fully connected.	• Turn the coupling nut approximately one-half to three-quarters additional turn until solid stop. Tighten by hand only - do not use tools.
	ELECTRICAL ISSUES:	
	• Electrode cracked or broken; "sparks at crack."	• Replace electrode(s).
	• Electrode tip not in proper position. (Does not apply to SUREFIRE.)	Main Burners: • Tip of electrode should be pointing toward gas port opening on burner. The distance should be 1/8" to 1/4". Adjust if necessary. Sideburner: • Tip of electrode should be pointing toward gas port opening on burner. the distance should be 1/8" to 3/16". Adjust if necessary.
	• Wire and/or electrode covered with cooking residue.	• Clean wire and/or electrode with rubbing alcohol and clean swab.
	• Wires are loose or disconnected.	• Reconnect wires or replace electrode/wire assembly.
	• Wires are shorting (sparking) between ignitor and electrode.	• Replace ignitor wire/electrode assembly.
	• Dead battery.	• Replace with a new alkaline battery.
	ELECTRONIC IGNITION:	
	• No spark, no ignition noise.	• See Section I of Electronic Ignition System.
	• No spark, some ignition noise.	• See Section II of Electronic Ignition System.
	• Sparks, but not at electrode or at full strength.	• See Section III of Electronic Ignition System.
Burner(s) will not match light.	• See **"GAS ISSUES:"** .	
	• Match will not reach.	• Use long-stem match (fireplace match).
	• Improper method of match-lighting.	• See "Match-Lighting" section of Use and Care.

Troubleshooting (*continued*)

Problem	Possible Cause	Prevention/Solution
Sudden drop in gas flow or low flame.	• Out of gas. • Excess flow valve tripped. • Vapor lock at coupling nut/LP cylinder connection.	• Check for gas in LP cylinder. • Turn off knobs, wait 30 seconds and light grill. If flames are still low, turn off knobs and LP cylinder valve. Disconnect regulator. Reconnect regulator and leak-test. Turn on LP cylinder valve, wait 30 seconds and then light grill. • Turn off knobs and LP cylinder valve. Disconnect coupling nut from cylinder. Reconnect and retry.
Flames blow out.	• High or gusting winds. • Low on LP gas. • Excess flow valve tripped.	• Turn front of grill to face wind or increase flame height. • Refill LP cylinder. • Refer to “Sudden drop in gas flow” above.
Flare-up.	• Grease buildup. • Excessive fat in meat. • Excessive cooking temperature.	• Clean burners and inside of grill/firebox. • Trim fat from meat before grilling. • Adjust (lower) temperature accordingly.
Persistent grease fire.	• Grease trapped by food buildup around burner system.	• Turn knobs to OFF. Turn gas off at LP cylinder. Leave lid in position and let fire burn out. After grill cools, remove and clean all parts.
Flashback (fire in burner tube(s)).	• Burner and/or burner tubes are blocked.	• Turn knobs to OFF. Clean burner and/or burner tubes. See burner cleaning section of Use and Care.
One burner does not light from other burner(s).	• Grease buildup or food particles in end(s) of carryover tube(s).	• Clean carry-over tube(s) with wire brush.

Troubleshooting - Electronic Ignition

Problem (Ignition)	Possible Cause	Check Procedure	Prevention/Solution
SECTION I No sparks appear at any electrodes when Electronic Ignition Button is pressed; **no noise** can be heard from spark module.	• Battery not installed properly. • Dead battery. • Button assembly not installed properly. • Faulty spark module.	• Check battery orientation. • Has battery been used previously? • Check to insure threads are properly engaged. Button should travel up and down without binding. • If no sparks are generated with new battery and good wire connections, module is faulty.	• Install battery (make sure that “+” and “–” connectors are oriented correctly, with “+” on cap end.) • Replace battery with new alkaline battery. • Unscrew button cap assembly and reinstall, making sure threads are aligned and engaged fully. • Replace spark module assembly.
SECTION II No sparks appear at any electrodes when Electronic Ignition Button is pressed; noise can be heard from spark module.	• Output lead connections not connected.	• Are output connections on and tight?	• Remove and reconnect all output connections at module and electrodes.
SECTION III Sparks are present but not at all electrodes and/or not at full strength	• Output lead connections not connected. • Arcing to grill away from burner(s). • Weak battery. • Electrodes are wet. • Electrodes cracked or broken “sparks at crack”.	• Are output connections on and tight? • If possible, observe grill in dark location. Operate ignition system and look for arcing between output wires and grill frame. • All sparks present but weak or at slow rate. • Has moisture accumulated on electrode and/or in burner ports? • Inspect electrodes for cracks.	• Remove and reconnect all output connections at module and electrodes. • If sparks are observed other than from burner(s), wire insulation may be damaged. Replace wires. • Replace battery with a new alkaline battery. • Use paper towel to remove moisture. • Replace cracked or broken electrodes.