This Owner's Manual is provided and hosted by Appliance Factory Parts.

Appliance Factory Parts
Experts in BBQ, Humidifier, & Appliance Parts
1-800-955-7075

MASTERBUILT CSMB7P Owner's Manual

Shop genuine replacement parts for MASTERBUILT CSMB7P

Find Your MASTERBUILT Grill Parts - Select From 589 Models

-------- Manual continues below --------

Masterbuilt Manufacturing, Inc
A Georgia Company
450 Brown Avenue
Columbus, Georgia 31906
Customer Service 1-800-489-1581

Manual Code: 988050002 Rev 060627

MASTERBUILT
Cooking Made Simple

ASSEMBLY, CARE & USE MANUAL~WARNING & SAFETY INFORMATION

MODELs 7BCM, 7CMBPS, 7CMBPTSB, 7CMTSB, 7CMTSBP, BP7P, BP7TSB, BPS7P, CM7P, CM7TSB, CM7TSBP, CMB7P, CSMB7P, CSMM7P, CSMM7TSBP, M7, M7P, M7SS, M7TSB, M7TSBP, S7CMTSB, S7CMTSBP, SS7CMTSB, SS7CMTSBP, SMM7, SMM7P, SMM7TSB, SMM7TSBP

THIS PRODUCT IS FOR OUTDOOR USE ONLY

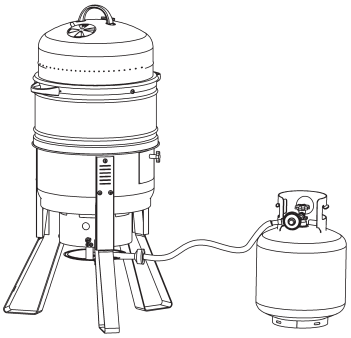

DESIGN CERTIFIED ®

(Propane Tank Not Included)

Tools required for assembly: Adjustable Wrench, Phillips Head Screwdriver.

CARBON MONOXIDE HAZARD	WARNING
Burning charcoal/wood gives off carbon monoxide, which has no odor and can cause death. DO NOT burn wood chips inside homes, vehicles, tents, garages or any enclosed areas. Use only outdoors where it is well ventilated.	This manual contains important information necessary for the proper and safe use of this smoker. Read and follow all warnings and instructions before using smoker and during use. Keep this manual for future reference.
Failure to follow these warnings and instructions properly could result in fire or explosion, which could cause property damage, personal injury, or death.	

DANGER

If you smell gas:

1. Shut off gas to the appliance.
2. Extinguish any open flame.
3. Open/remove door.
4. If odor continues, keep away from the appliance and immediately call your Fire Department.

DANGER

1. Never operate this appliance unattended.
2. Never operate this appliance within 10 feet (3m) of another gas cylinder.
3. Never operate this appliance within 25 feet (7.5m) of flammable liquids.
4. If fire should occur keep away from appliance and immediately call your fire department. Do not attempt to extinguish an oil/grease fire with water.

FAILURE TO FOLLOW THESE INSTRUCTIONS AND WARNINGS PROPERLY COULD RESULT IN FIRE OR EXPLOSION, WHICH COULD CAUSE PROPERTY DAMAGE, PERSONAL INJURY OR DEATH.

GENERAL WARNINGS AND SAFETY INFORMATION

- Unit is for outdoor use only.
- Never use inside enclosed areas such as patios, garages, buildings or tents.
- Never use inside recreational vehicles or on boats.
- Never operate unit under overhead construction such as roof coverings, carports, awnings, or overhangs.
- Never use unit as a heater.
- Maintain a minimum distance of 10ft (3m) from overhead construction, walls, rails or other structures.
- Keep a minimum 10ft (3m) clearance of all combustible materials such as wood, dry plants, grass, brush, paper, or canvas.
- Use unit on a level, non-combustible, stable surface such as dirt, concrete, brick or rock.
- Keep children and pets away from unit at all times. Do NOT allow children to use unit.
- Unit has an open flame. Keep hands, hair, and face away from burner flame. Do NOT lean over burner when lighting. Loose hair and clothing may catch fire.
- Allow unit to cool below 115°F (45°C) before moving or storing.
- Avoid bumping or impacting unit.
- This unit is HOT while in use and during cooling process. Wear protective gloves/mitts.
- Use of alcohol, prescription or non-prescription drugs may impair user's ability to properly assemble or safely operate unit.
- Never use glass, plastic or ceramic cookware in unit.
- Do NOT allow anyone to conduct activities around unit during or following its use until it has cooled.
- Accessory attachments not supplied by Masterbuilt Manufacturing, Inc. are not recommended.
- Never use unit for anything other than its intended use. This unit is NOT for commercial use.
- Use in accordance with local, state and federal fire codes.

WARRANTY INFORMATION

Masterbuilt warrants its products to be free from defects in material and workmanship under proper assembly, normal use and recommended care for 90 days from the date of original retail purchase.

Masterbuilt warranty does not cover paint finish as it may burn off during normal use.

Masterbuilt warranty does not cover rust of the unit.

Masterbuilt requires reasonable proof of purchase for warranty claims and suggests that you keep your receipt. Upon the expiration of such warranty, all such liability shall terminate.

Within the stated warranty period, Masterbuilt, at its discretion, shall repair or replace defective components free of charge with owner being responsible for shipping. Should Masterbuilt require return of component(s) in question for inspection Masterbuilt will be responsible for shipping charges to return requested item.

This warranty excludes property damage sustained due to misuse, abuse, accident, damage arising out of transportation, or damage incurred by commercial use of this product.

This expressed warranty is the sole warranty given by Masterbuilt and is in lieu of all other warranties, expressed or implied including implied warranty, merchantability, or fitness for a particular purpose.

Neither Masterbuilt nor the retail establishment selling this product, has authority to make any warranties or to promise remedies in addition to or inconsistent with those stated above.

Masterbuilt's maximum liability, in any event, shall not exceed the purchase price of the product paid by the original consumer/purchaser. Some states do not allow the exclusion or limitation of incidental or consequential damages. In such a case, the above limitations or exclusions may not be applicable.

California residents only: Not withstanding this limitation of warranty, the following specific restrictions apply; if service, repair, or replacement of the product is not commercially practical, the retailer selling the product or Masterbuilt will refund the purchase price paid for the product, less the amount directly attributable to use by the original buyer prior to the discovery of the nonconformity. Owner may take the product to the retail establishment selling this product in order to obtain performance under warranty.

This expressed warranty gives you specific legal rights, and you may also have other rights which vary from state to state.

COMPLETE & RETURN TO

ATTN: WARRANTY REGISTRATION

Masterbuilt Manufacturing, Inc.

450 Brown Avenue, Columbus, GA 31906

Name: _____

Address: _____

City: _____

State/Province: _____ Postal Code: _____

Phone Number: _____ E-Mail Address: _____

Model Number: _____ Serial Number: _____

Purchase Date: _____ Place of Purchase: _____

SMOKING CHART

ITEM	SIZE	TEMP	CHARCOAL	WATER	WOOD CHIPS	COOKING TIME	INTERNAL TEMP
BEEF							
Pot Roast (arm, top, chuck, blade)	4 - 5 lbs (1.8-2.3kgs)	200°F (93°C)	7 - 8 lbs (3.2-3.6kgs)	3 - 4 qts (2.8-3.8l)	2 - 3 cups (0.56-0.83l)	3 - 4 hrs	140°F (60°C) Rare
							160°F (71°C) Medium
							170°F (77°C) Well Done
Brisket	3 - 4 lbs (1.4-1.8kgs)	200°F (93°C)	7 - 8 lbs (3.2-3.6kgs)	4 qts (3.8l)	3 cups (0.83l)	3 - 4.5 hrs	170°F (77°C) Well Done
PORK							
Loin Roast, bone in	3 - 4 lbs (1.4-1.8kgs)	200°F (93°C)	8 lbs (3.6kgs)	4 qts (3.8l)	2 cups (0.56l)	3.5 - 4.5 hrs	170°F (77°C) Well Done
	5 - 7 lbs (2.3-3.2kgs)		8 lbs (3.6kgs)	6 qts (5.7l)	3 cups (0.83l)	5 - 7 hrs	
Loin Roast, boneless	3 - 5 lbs (1.4-2.3kgs)	200°F (93°C)	10 lbs (4.6kgs)	4 - 5 qts (3.8-4.7l)	3 cups (0.83l)	3.5 - 5.5 hrs	170°F (77°C) Well Done
Spare Ribs	4 - 6 lbs (1.8-2.7kgs)	200°F (93°C)	8 - 10 lbs (3.6-4.6kgs)	4 qts (3.8l)	3 cups (0.83l)	2.5 - 3.5 hrs	Well done when meat pulls away from bone
	7 - 10 lbs (3.2-4.6kgs)		10 lbs (4.6kgs)	5 - 6 qts (4.7-5.7l)	3 cups (0.83l)	3.5 - 5 hrs	
POULTRY							
Chicken- 2 whole	2 - 3 lbs ea (0.9-1.4kgs)	200°F (93°C)	5 - 7 lbs (2.3-3.2kgs)	3 - 4 qts (2.8-3.8l)	2 cups (0.56l)	2.5 - 3.5 hrs	180°F (82°C) (Leg moves easily in joint)
Turkey	8 - 10 lbs (3.6-4.6kgs)	200°F (93°C)	8 lbs (3.6kgs)	5 qts (4.7l)	3 cups (0.83l)	4 - 6 hrs	185°F (85°C) (Leg moves easily in joint)
	11 - 13 lbs (5.0-5.9kgs)		8 - 10 lbs (3.6-4.6kgs)	6 qts (5.7l)	3 cups (0.83l)	6 - 7.5 hrs	
SEAFOOD							
Salmon	6 - 7 lbs (2.7-3.2kgs)	200°F (93°C)	10 lbs (4.6kgs)	5 - 6 qts (4.7-5.7l)	3 cups (0.83l)	4 - 6.5 hrs	Flesh white, flakes when forked
Fish Fillets	Full Grate	200°F (93°C)	5 lbs (2.3kgs)	3 qts (2.8l)	1 - 2 cups (0.28-0.56l)	1.5 - 2.5 hrs	
Shrimp, Clams, Crab Legs	Full Grate	200°F (93°C)	5 lbs (2.3kgs)	3 qts (2.8l)	1 - 2 cups (0.28-0.56l)	1 - 2 hrs	Shrimp pink Shells open
WILD GAME							
Quail, Dove etc.	12 - 16 birds	200°F (93°C)	7 - 10 lbs (3.2-4.6kgs)	4 qts (3.8l)	2 - 3 cups (0.56-0.83l)	2 - 4 hrs	Leg moves easily in joint
Pheasant, Duck, etc.	5 - 7 lbs (2.3-3.2kgs)	200°F (93°C)	8 - 10 lbs (3.6-4.6kgs)	4 - 5 qts (3.8-4.7l)	2 - 3 cups (0.56-0.83l)	4 5 hrs	180-185°F (82-85°C) Well Done

GENERAL WARNINGS AND SAFETY INFORMATION continued

- Use 20LB (9kgs) gas cylinder or smaller that has protective collar (cylinder not included with unit).
- Installation of unit must conform with local codes or in the absence of local codes, with National Fuel Gas Code, ANSIZ223.1/NFPA 54, Storage and Handling of Liquefied Petroleum Gasses, ANSI/NFPA 58 or CSA B149.1, Natural Gas Installation Code.
- LP gas cylinder being used must be constructed and marked in accordance with specifications for LP gas cylinders of US Department of Transportation (DOT) CFR 49 or National Standards of Canada, CAN/CSA-B339, Cylinders, Spheres and Tubes for the Transportation for Dangerous Goods.
- Always perform soapy water test (see “Soapy Water Test Instructions” in this manual) EVERY TIME you use unit.
- Before each use check all nuts, screws and bolts to make sure they are tight and secure.
- Before each use inspect gas hose for signs of damage.
- Always disconnect gas cylinder from unit when not in use.
- Never attach/disconnect gas cylinder, move or alter gas fittings when unit is in operation.
- Never use gas cylinder if there is evidence of dents, gouges, bulges, fire damage, erosion, leakage, excessive rust, or other forms of visible external damage. This may be hazardous and cylinder should be taken to a liquid propane supplier to be checked.
- Regulator and hose assembly supplied with unit MUST be used. For replacement parts, if needed, contact Masterbuilt Customer Service at 1-800-489-1581.
- When lighting burner remove all smoker parts to prevent explosion from gas build up.
- If burner does not ignite, turn off regulator control valve first, then gas cylinder, and wait 5 minutes. After time is up, repeat burner lighting steps.
- Keep fuel supply hose away from unit while in operation.
- Keep fuel supply hose away from any heated surface.
- Do NOT obstruct flow of combustion and ventilation. Keep ventilation openings of cylinder enclosure free and clear of debris.
- When use is complete, always turn regulator control valve OFF first, then gas cylinder valve OFF.
- Gas MUST be turned off at the supply cylinder when not in use.
- Do NOT store spare LP gas cylinder under or near unit. Gas cylinder safety relief valve may overheat allowing gas to release causing fire, which may cause death or serious injury.
- Never fill cylinder over 80% full or cylinder may release gas causing fire, which may cause death or serious injury.
- If you smell, hear or see gas escaping, immediately get away from gas cylinder and call the Fire Department. Fire may cause death or serious injury.
- Place a dust cap on cylinder valve outlet whenever cylinder is not in use. Only install dust cap provided with cylinder. Other caps or plugs may cause leaks.
- Cylinder MUST be stored outdoors, out of children’s reach and must NOT be stored in a building, garage, or any other enclosed area.

COOKING WITH OIL/GREASE WARNINGS

- All food products MUST be completely thawed and towel dried to remove excess water and ice. If not completely thawed and dried food may cause a boil over when placed into HOT oil, causing a fire and severe burns.
- Never overfill cooking vessel with cooking liquid. Follow instructions in this manual for establishing proper liquid levels.
- Never drop food or accessories into hot liquids.
- Be careful when removing food, liquid is hot and may cause burns.
- Use care when removing basket from cooking vessel, avoid pulling pot off cooker stand.
- Never heat oil above 400°F (200°C). If temperature exceeds 400°F (200°C) turn burner or gas supply OFF. Temperature must decrease to 350°F (177°C) then relight burner following burner lighting steps. If covered, do NOT remove cover(lid).
- When cooking with oil/grease, thermometer provided with unit must be used. See "Thermometer Safety Check and Usage" section in this manual for proper installation and use of thermometer.
- Do NOT leave unit unattended while heating liquid or cooling liquid after use. Liquid remains at scalding temperatures long after cooking has ended. Allow liquid to cool below 115°F (45°C) before cleaning and storing.
- In the event of rain, snow, hail, sleet or other form of precipitation when cooking with oil, cover cooking vessel and immediately turn off burner and gas supply. DO NOT MOVE cooker stand or cooking vessel.
- When cooking with oil/grease have BC or ABC type fire extinguisher readily accessible.

SHOULD OIL/GREASE FIRE OCCUR:

- Do NOT attempt to extinguish an oil/grease fire with water, IMMEDIATELY call your Fire Department. Personal safety is a priority.
- Type BC or ABC dry chemical fire extinguisher may, in some circumstances, contain fire. You may also be able to smother fire using dirt, sand or baking soda.
- If fire occurs INSIDE POT follow these steps-
  1. Turn off gas supply.
  2. Wearing protective glove, take pot lid and cover pot.
- If fire occurs OUTSIDE POT, follow these steps-
  1. Call Fire Department.
  2. Attempt to extinguish fire using BC or ABC type fire extinguisher.
  3. Turn off gas supply if possible.

WARNING

- Do NOT allow hose to come in contact with unit. HOT surfaces may damage hose causing leaks or fire.
- If oil starts to smoke TURN BURNER OFF. This means oil has exceeded 400°F(200°C) and will catch fire. Allow oil to cool below 400°F(200°C) before relighting burner.
- When cooking with oil ALWAYS turn burner OFF before lowering food into oil. Relight burner after food is submerged.

DO NOT TURN BURNER TO LOW SETTING TO KEEP OIL/GREASE HOT FOR LATER USE. TEMPERATURE OF OIL/GREASE WILL CONTINUE TO RISE AND WILL CATCH FIRE.

HOW TO USE COOKER

Frying and Boiling

Determine Fill Line

1. Place food product in/on holder.
2. Place holder with food into empty cooking vessel.
3. Fill cooking vessel with water just until food product is completely submerged. There must be a minimum of 3 inches (8cm) between water level and top of cooking vessel.
4. Remove food product. Either mark water level on side of cooking vessel or measure amount of water inside vessel.
5. Use this measurement for amount of cooking oil needed.
6. Empty water and completely dry cooking vessel and food product.

WARNING

- Do NOT allow oil to get hotter than 400°F(200°C).
- Failure to follow steps to determine fill line may cause an overflow of oil to occur resulting in death, serious injury or property damage.

COOKER RECIPES

Cajun-Coated Fish

4 fish fillets, 1/2"-3/4" thick
1/4 cup all purpose flour
1/4 cup yellow cornmeal
1 tsp dried basil, onion powder
1/2 tsp garlic salt, ground white pepper, dried thyme
1/2 tsp - 1 tsp ground red pepper
1/3 tsp ground black pepper
1/4 tsp ground sage
1/4 cup butter/margarine

Thaw fish. In a bowl combine all other ingredients. Coat both sides of fish. Cook in 1 gallon oil at 350°F for 3-4 minutes.

Screaming Buffalo Wings

24 chicken wings
1 small bottle hot sauce
1/2 tsp salt
1/4 tsp pepper
1/4 cup butter/margarine, melted
1 tsp white vinegar
Pinch of garlic salt

Thaw wings and place in fry basket. Heat oil to 350°F. Slowly lower basket into oil. Cook 8-12 minutes. Raise basket out of oil and drain. Place wings in a bowl. In separate bowl mix hot sauce, melted butter, vinegar and salt. Pour mixture over wings. Mix well and serve with celery sticks and blue cheese dressing.

ALWAYS TURN BURNER OFF BEFORE LOWERING OR REMOVING BASKET FROM OIL

GRILL/SMOKER RECIPES

Grilling Recipes

Caribbean Chicken
8 pieces of chicken
1 tsp salt
1 1/2 tsp dried oregano
1/4 tsp paprika
1 tbsp lemon or lime juice
1 small onion, minced
1 garlic clove, peeled
1/3 cup ketchup
1/3 cup cider vinegar

Mash salt with peeled garlic to make a paste. Work in 1/2 tsp of oregano, then paprika and lemon juice. Rub mixture over chicken. Put chicken on grill rack over hot coals. Turn chicken every 7 - 8 minutes. Combine ketchup, vinegar and remaining oregano. Simmer 15 minutes. When chicken is done, brush on chicken and grill an additional 5 minutes. Place chicken on warm platter and serve remaining mixture as sauce. Fried plantain, grill-baked bananas or saffron rice are good sides.

Grilled Flank Steak
1 1/2 lbs flank steak
1/4 cup worcestershire sauce
1/3 cup soy sauce
1 tsp ground ginger(dried or fresh)
Juice from 1 lemon

Combine sauces, ginger and lemon to make marinade. Place steak in shallow, glass casserole dish and pour marinade over meat. Marinate 3 hours. Grill 3-4 minutes per side. Slice diagonally and serve.

Smoking Recipes

Smoked Ham
1 10-lb pre-cooked ham
1/4 cup crushed pineapple
1/2 cup honey
2 tablespoons soy sauce

Combine pineapple, honey and soy sauce together. This is the basting mixture. Remove fat from ham. Score top of ham 1/4" deep. Put water bowl under middle grill rack. Do NOT add any liquid to bowl, this is a dry smoke recipe. Place ham on middle rack with scored side up. Place 2 - 3 wood chunks on charcoal or in flame disk bowl. Baste top of ham every hour with mixture. Cook 4 hours or until inside of ham is 140°F.

Smoked Turkey
6-8 lbs turkey
2 cups hickory or apple wood chips

Soak wood chips in water for at least one hour. This helps wood to smolder and smoke rather than burn up. Rinse turkey and dry well. Fold wings close to body and skewer. Close both end openings with skewers and tie legs tightly together. Secure with holding forks. Place water bowl under grill rack being used. Put turkey on grill rack over a low, indirect heat. Throw 1/2 of drained wood chips on hot coals and keep other half to be used as needed. Cook for approximately 2 1/2 hours. Internal temperature should be 185°F and leg should move easily in joint when done. Be sure to keep lid down and smoke in. Let turkey cool 10 minutes before carving.

COOKING WITH CHARCOAL WARNINGS

READ CARBON MONOXIDE WARNING ON FRONT COVER

- **Read and follow all warnings and instructions on charcoal packaging.**
- **Never use charcoal as a heating fuel. Use only for cooking outdoors.**
- **Only use charcoal lighting fluid. Never use gasoline, alcohol, or other highly volatile fluids to ignite charcoal. These fluids can explode causing injury or death.**
- **Lighter fluid should be capped immediately after use and placed a minimum of 25 feet (7.5m) from unit before lighting charcoal.**
- **As an alternative to lighter fluid, you may use solid fire starter or metal chimney charcoal starter.**
- **Never overfill charcoal bowl. This can cause serious injury as well as damage unit.**
- **Never add lighter fluid to existing HOT or warm coals.**
- **If using charcoal lighter fluid, allow charcoal to burn until covered with light ash. Then place upper smoker body on lower smoker body and cover with dome lid. Following this procedure keeps fumes from being trapped in unit which may result in a flash fire or explosion. It will also protect unit's finish.**
- **Fatty foods like hamburger can have excess grease that can cause flare ups. When cooking fatty foods, use caution when opening lid and during cooking to avoid being burned.**
- **Once charcoal is lit, do NOT touch to see if it is hot.**
- **Use extreme caution when removing smoker dome lid. Keep hands and body safe from possible flare-ups or hot steam.**
- **In the event of grease fire from food drippings, cover your smoker with dome lid to suffocate flames.**
- **Never leave HOT coals or ashes unattended.**
- **Dispose of cold ashes by placing in aluminum foil, soaking with water and discarding in a non-combustible container.**
- **Do NOT store unit with HOT ashes or charcoal inside. Store only when fire is completely out and all surfaces are cold.**

WARNING

Combustion by-product produced when using this product contains chemicals known to the State of California to cause birth defects, other reproductive harm, or cancer.

SOAPY WATER TEST WARNINGS & PROCEDURES

Warnings:

- Soapy Water Test MUST be performed each time gas cylinder is connected to burner/hose and/or each time it is used.
- Soapy Water Test MUST be performed outdoors in well ventilated area.
- When performing Soapy Water Test keep smoker away from open flames, sparks or lit cigarettes.
- Smoker is designed to work with propane gas only. This product will NOT operate with natural gas.
- Never use an open flame to test for gas leaks.

Preparation:

- Remove any cookware/smoker from cooker stand.
- Make sure regulator and gas cylinder valve is turned to OFF position.
- Prepare soapy water solution: (1) part dish washing liquid (or more if desired), (3) parts water.
- Apply soapy water solution to gas cylinder valve, regulator and hose length up to burner.

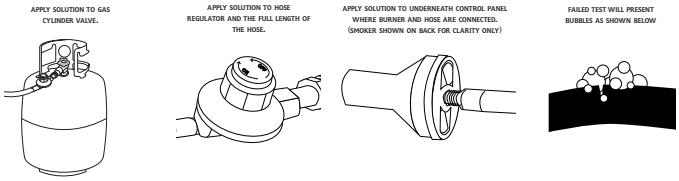

Testing Gas Valve:

- Turn gas cylinder valve ON and watch for bubbles. DO NOT LEAVE GAS ON MORE THAN 12 SECONDS. If bubbles appear, stop, turn gas cylinder OFF and retighten fitting. Repeat test.

Testing Regulator and Hose:

- AFTER gas cylinder valve has passed Soapy Water Test, turn gas cylinder valve ON, open regulator control valve one full turn and check for bubbles at valve location, along full length of hose and at burner connection. DO NOT LEAVE GAS ON MORE THAN 12 SECONDS. If bubbles appear, stop, turn regulator valve OFF, turn gas cylinder OFF and retighten the connection that is leaking gas. If hose is source of leak, STOP, do not use unit. Hose must be replaced.
- When test is complete, and there are no leaks, wait a minimum of 5 minutes for gas fumes to diminish before lighting cooker.

DURING ANY PORTION OF SOAPY WATER TEST IF BUBBLES CONTINUE TO APPEAR, STOP, DO NOT USE UNIT. CONTACT LOCAL PROPANE DEALER OR MASTERBUILT CUSTOMER SERVICE 1-800-489-1581.

Note: Use 20LB (9kgs) gas cylinder or smaller that has a protective collar with this unit. Cylinder NOT included with this unit.

HOW TO SEASON AND USE SMOKER

MASTERBUILT RECOMMENDS SEASONING SMOKER PRIOR TO FIRST USE.

- Follow burner lighting steps to light burner.
- Bring temperature up and maintain at 200°F(93°C).
- Place two or three wood chunks on flame disk bowl and operate smoker with no food or water for two to four hours.
- Seasoning smoker will remove new smell.

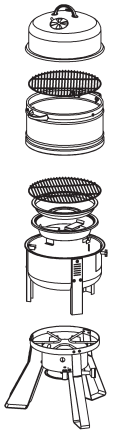

Gas Smoking

1. Add desired amount of wood in flame disk bowl.
2. Fill water bowl with favorite marinade or water. Do NOT overfill water bowl. For dry smoking do NOT use marinade or water.
3. Place food on grill racks.
4. Remove lid and light burner as outlined in "Burner Lighting Instructions" section in this manual.
5. When burner is lit, replace lid and adjust flame to desired level.

Caution:

- **Smoker heats up quickly.**
- **Smoker access door is HOT. Wear protective gloves.**
- **Never move smoker while in use. Allow unit to cool completely before moving or handling.**

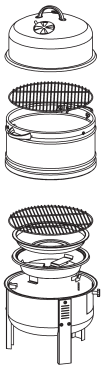

Charcoal Smoking

1. Add desired amount of charcoal to flame disk bowl.
2. Light charcoal following directions on charcoal bag.
   Or use gas cooker to light charcoal -see #3.
3. Add charcoal to flame disk bowl and place base pan on cooker stand. Light burner following steps in "Burner Lighting Instructions" section. When charcoal is ready turn OFF regulator control valve and then gas cylinder.

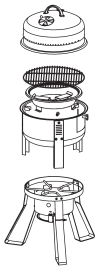

Gas Grilling

1. Remove smoker body and water bowl. This allows direct heat for grilling.
2. Remove lid and light burner as outlined in "Burner Lighting Instructions" section.
3. When burner is lit, replace lid and adjust flame to desired level.

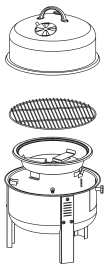

Charcoal Grilling

1. Remove smoker body and water bowl. This allows direct heat for grilling.
2. Add desired amount of charcoal to flame disk bowl.
3. Light charcoal following directions on charcoal bag.

Or use gas cooker to light charcoal -see #3 in Charcoal Smoking section.

BURNER MAINTENANCE

Cast Iron Burner Flame is Yellow or No Flame?

If burner flame is yellow, blows out frequently, does not light or flame is inside venturi then burner venturi needs to be checked for obstructions. Dirt dobbers, spiders and other insects build nests inside burner venturi blocking air and gas flow. KEEP AIR SHUTTER CLOSED AFTER EACH USE.

How to clean burner assembly:

1. Remove hose from burner using adjustable wrench.
2. Insert small rod in opening of burner where hose was attached. This should breakup any obstructions.
3. Hold burner up to light and look for other obstructions.
4. If burner has not been cleared then flush with water. Make sure burner is completely dry before using.
5. Once burner has been cleared reassemble burner.

KEEP BURNER VENTURI FREE OF OBSTRUCTIONS OR DAMAGE TO HOSE ASSEMBLY MAY OCCUR.

COOKING TIPS AND WOOD SMOKING GUIDE

Cooking in Cooler/Higher Climates

When outside temperature is cooler than 65°F (18°C) and/or altitude is above 3,500 feet (1067m), additional cooking time may be required. To insure that meat is completely cooked use a meat thermometer to test internal temperature.

Lifting Smoker Lid during cooking process may extend cooking time due to heat loss.

Using One Grill Rack

When using only one grill rack, use upper grill rack for better results.

Using Two Grill Racks

When using both grill racks, place food requiring least cooking time on top grill rack.

WOOD SMOKING GUIDE FOR MEATS

WOOD FLAVOR	POULTRY	FISH	HAM	BEEF	PORK	LAMB
Hickory Pungent, smoky, bacon-like flavor	✓	✓	✓	✓	✓	
Mesquite Sweet and delicate flavor	✓			✓		✓
Alder Delicate, wood smoke flavor	✓	✓			✓	
Pecan Bold and hearty flavor	✓	✓			✓	
Maple Sweet, subtle flavor	✓				✓	
Apple Sweet, delicate flavor	✓	✓			✓	
Cherry Sweet, delicate flavor	✓				✓	

WARNING

Perform "Soapy Water Test" before each use. See "Soapy Water Test" section in manual.
Extinguish all open flames before connecting regulator to gas cylinder.
Turn gas OFF after each use.

BURNER LIGHTING INSTRUCTIONS

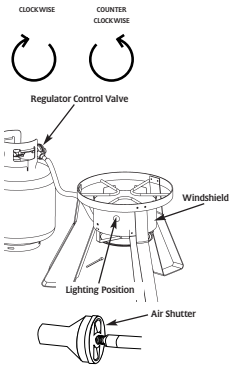

- Check regulator control valve to be certain it is in OFF position before connecting gas cylinder.
- Perform Soapy Water Test.
- Turn gas cylinder valve ON. Place lit match to burner under the wind shield.
- Slowly turn ON regulator control valve until burner lights. If burner does not light within 5 seconds or is blown out , turn OFF regulator control valve and then turn gas cylinder valve OFF. Wait 5 minutes for fumes to diminish before relighting.
- After burner is lit, open regulator control valve until flame increases.
- Use air shutter on burner to adjust flame until it burns blue.
- Reduce flame.
- After each use turn regulator control valve OFF, then turn gas cylinder OFF. Always allow cooker stand and cooking vessel to cool completely to touch before moving or storing.

WARNING

1. **Never leave appliance unattended. Even when burner is set to a low flame. Oil will heat up quickly and ignite at 550°-700° F (288°-371°C).**
2. **Tripping over appliance hose may result in the spilling of HOT oil or water causing personal injury and property damage.**

PLACEMENT OF APPLIANCE FOR SAFETY

Before using smoker check wind direction & place cylinder UPWIND, upright 12" (30.5cm) away from unit.

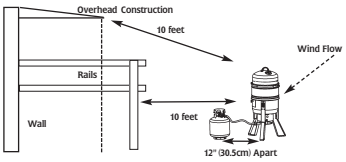

CAUTIONS WHEN USING POTS WITH SMOKER

POT SIZE AND PLACEMENT

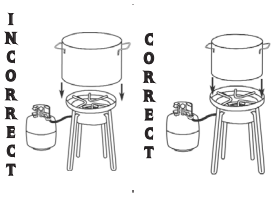

- Do NOT use cooking pot or vessel larger than 30qts. Cooking pot or vessel MUST fit inside cooker security ring.
- NEVER place an empty cooking vessel on unit while in operation.

POTS WITH BASKETS AND FRYING RACKS

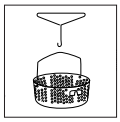

- Do NOT overfill pot with oil or water. Larger pots have a fill line mark. Smaller pots may not be marked. See "How to Use Cooker" section in this manual.
- After filling pot, place food in basket or on rack. Slowly lower into oil or water using lifting hook. Wear protective gloves. Cover with lid.
- When food is ready to remove, turn burner to OFF position. Wear protective gloves and remove lid. Use lifting hook to pull basket/rack up slowly.

INSTALLING FRY THERMOMETER

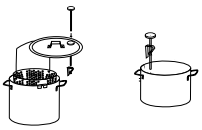

- Place stem of thermometer through hole in lid.
- Slide clip onto thermometer stem.
- If no lid, clip thermometer to side of cooking pot.

THERMOMETER SAFETY CHECK AND USAGE

- Before each use place thermometer stem in boiling water. Make sure it registers 212°F (100°C) +/- 20°F (10°C) If it does not, contact Masterbuilt Customer Service at 1-800-489-1581 to order a replacement.
- Do NOT let thermometer pierce food when lowering into pot. This will give a false reading.

10QT (0.96L) POT ASSEMBLY

(NOT ALL MODELS ARE SOLD WITH COOKWARE.)

(STYLES AND POT SIZES WILL VARY. CHECK UNIT PACKAGING FOR DETAILS.)

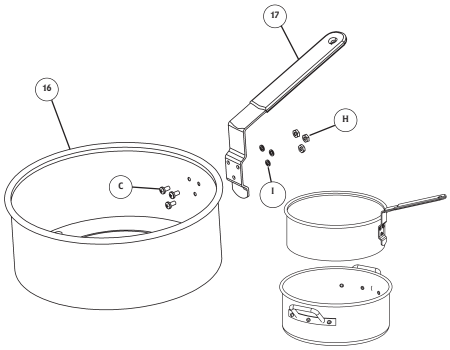

STEP 1.
Align holes in basket handle (17) with basket (16). Attach using phillips head screws (C), lock washers (I) and hex nuts (H) as shown.

SMOKER MAINTENANCE AND CARE

- Before each use check and clean burner venturi tube of insects and their nests. A clogged tube can lead to fire beneath cooker.
- Check regulator, hose and burner before AND after each use for wear.
- ALWAYS turn gas OFF at cylinder prior to inspecting parts.
- Do NOT obstruct flow of combustion or ventilation. Keep ventilation opening(s) of cylinder enclosure free of debris. Cylinder supply system must be arranged for vapor withdrawal. Keep smoker area clear from combustible materials, gasoline and other flammable vapors and liquids.
- Lightly coat cooker stand with cooking oil after unit is completely cool to touch.
- Before storing unit dispose of coals/ashes in a non-combustible container.
- When unit not in use, gas MUST be turned OFF at the supply cylinder.
- ALWAYS disconnect gas cylinder after use.
- Clean unit, including special surfaces such as grill racks with cleaning agent. Wipe outside surface with a damp rag. Do NOT use oven cleaner.
- ALWAYS cover and store unit in a protected area.
- Cylinder must be stored upright, outdoors, out of reach of children and where temperatures will not exceed 125°F(52°C). Do NOT store in building, garage or other enclosed area.

SIDE SHELF ASSEMBLY

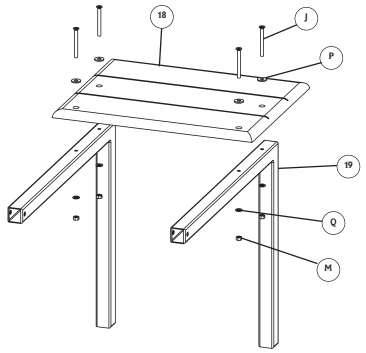

STEP 1.
Place wood shelf (18) on top of side shelf legs (19) as shown.

Attach using phillips head screws (J), flat washers (P), lock washers (Q) and hex nuts (M).

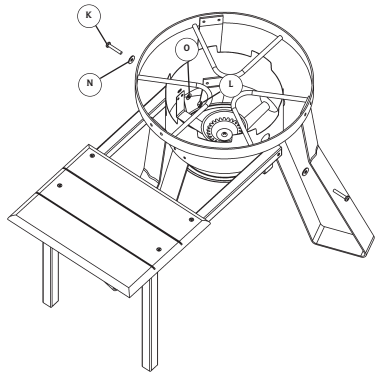

Step 2
Align side shelf legs to cooker head and attach as shown using phillips head screws (K), flat washers (N), lock washers (O) and hex nuts (L).

PARTS LIST

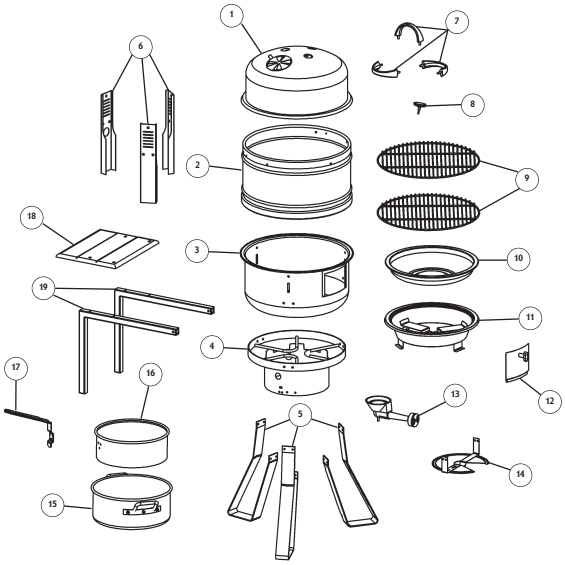

ITEM NO.	QUANTITY	DESCRIPTION	ITEM NO.	QUANTITY	DESCRIPTION
1	1	Smoker Lid	12	1	Charcoal/Water Access Door
2	1	Smoker Body	13	1	Cast Iron Burner
3	1	Smoker Base Pan	14	1	Burner Mount
4	1	Cooker Head	15	1	10QT(0.96L) Pot (Not all models sold with cookware-check unit packaging)
5	3	Cooker Stand Legs	16	1	Pot Basket
6	3	Smoker Legs	17	1	Basket Handle
7	3	Smoker Handles	18	1	Wood Side Shelf (Not all models sold with side shelf-check unit packaging)
8	1	Temperature Gauge	19	2	Side Shelf Legs
9	2	Cooking Grates	20	1	Regulator/Hose Assembly(not shown)
10	1	Water Bowl	21	1	Deep Fry Thermomter (not shown)
11	1	Flame Disk Bowl			

HARDWARE LIST

(A)
M6x1x10
Phillips Head
Flange Screw
qty - 12

(B)
M6x1x16
Phillips Head
Flange Screw
qty - 16

(C)
M5x1x10
Phillips Head
Screw
qty - 3

(D)
Grill Bracket

qty - 6

(E)
6MM
Wing Nut
qty - 12

(F)
M6
Flat Washer
qty - 6

(G)
M6
Lock Washer
qty - 6

(H)
M5
Hex Nut
qty - 3

(I)
M5
Lock Washer
qty - 3

(J)
8MM
Wing Nut
qty - 1

SIDE SHELF HARDWARE

(SIDE SHELF NOT INCLUDED IN ALL MODELS. CHECK UNIT PACKAGING FOR PRODUCT DETAILS.)

(J)
M5x0.8x50
Phillips Head
Screw
qty - 4

(K)
M6x1x35
Phillips Head
Screw
qty - 2

(L)
M6
Hex Nut

qty - 2

(M)
M5
Hex Nut

qty - 4

(N)
M6
Flat Washer
qty - 2

(O)
M6
Lock Washer
qty - 2

(P)
M5
Flat Washer
qty - 4

(Q)
M5
Lock Washer
qty - 4

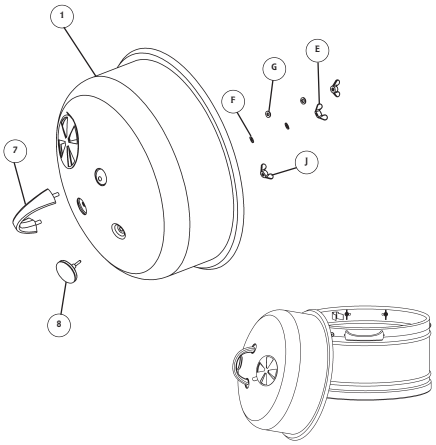

STEP 7.
Use handle's (7) pre-threaded bolt, flat washer (F), lock washer (G) and wing nut (E) to mount handle to smoker lid (1) as shown.

Insert temperature indicator (8) through hole in lid. Secure with pre-threaded wing nut (J).

Dome lid has an inside dome clip. When removing dome lid you may clip lid on side of smoker body.

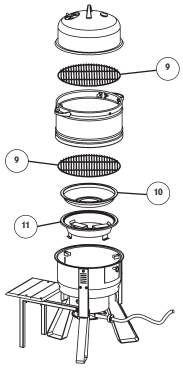

STEP 8.
Place flame disk bowl (11) in smoker base pan.

Place water bowl (10), when used, on base pan grill brackets.

Place cooking grate (9) on base pan grill brackets.

Place grill body on top of base pan.

Place cooking grate (9) on body grill brackets.

Place lid on top of smoker body

SMOKER IS READY FOR USE.
MASTERBUILT RECOMMENDS SEASONING SMOKER BEFORE USE.
SEE "HOW TO SEASON AND USE SMOKER" SECTION IN THIS MANUAL.

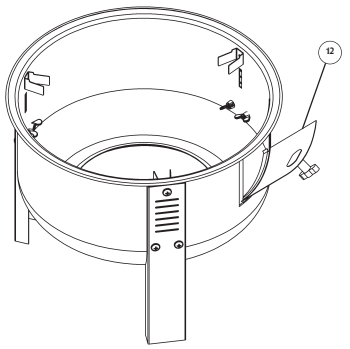

STEP 5.
Place bottom flange of charcoal access door (12) inside door opening in base pan. Close access door and turn knob to secure. To open door turn knob until door releases.

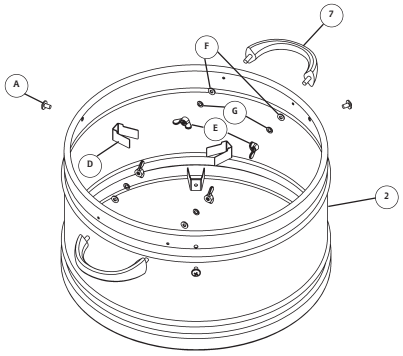

STEP 6a.
Use handle's (7) pre-threaded bolt, flat washer (F), lock washer (G) and wing nut (E) to mount handle to smoker body (2) as shown. Repeat on other side.

STEP 6b.
Align grill brackets (D) with smoker body holes and secure with phillips head flange screw (A).

REPLACEMENT PARTS LIST

ITEM NO.	DESCRIPTION	ITEM NO.	DESCRIPTION
990060184	Smoker Lid Kit - M7P	990060208	Burner Mount Kit - CSMM7P
990060185	Smoker Lid Kit - CM7P	911060031	Cooking Grate - All Models
990060186	Smoker Lid Kit - SMM7P, CSMM7P	911060064	Water Bowl - All Models
990060187	Smoker Body Kit - M7P	911060060	Flame Disk Bowl - All Models
990060188	Smoker Body Kit - CM7P	911060034	Charcoal Access Door - M7P, CM7P
990060189	Smoker Body Kit - SMM7P	911060061	Charcoal Access Door - SMM7P, CSMM7P
990060190	Smoker Body Kit - CSMM7P	911060035	Cast Iron Burner - All Models
990060191	Smoker Base Pan Kit - M7P	911060036	Regulator/Hose Assembly - All Models
990060192	Smoker Base Pan Kit - CM7P	990060209	Wood Side Shelf Kit - SMM7P
990060193	Smoker Base Pan Kit - SMM7P, CSMM7P	990060210	Side Shelf Leg Kit - SMM7P
990060194	Smoker Handle Kit - M7P, CM7P	911060065	10QT (0.96L) Pot - M7P, CM7P, SMM7P
990060195	Smoker Handle Kit - SMM7P, CSMM7P	911060062	10QT (0.96L) Pot - CSMM7 Pot
990060196	Smoker Leg Kit - M7P, SMM7P	990060212	Pot Basket Kit - M7P, CM7P, SMM7P
990060197	Smoker Leg Kit - CM7P	990060213	Pot Basket Kit - CSMM7P
990060198	Smoker Leg Kit - CSMM7P	990060211	Pot Basket Handle Kit - M7P, CM7P, SMM7P
990060199	Temperature Gauge Kit - All Models	990060214	Pot Basket Handle Kit - CSMM7P
990060200	Cooker Head Kit - M7P, SMM7P	988050002	Instruction Manual - All Models
990060201	Cooker Head Kit - CM7P	990060215	Smoker Hardware Kit - M7P, CM7P
990060202	Cooker Head Kit - CSMM7P	990060216	Smoker Hardware Kit - SMM7P, CSMM7P
990060203	Cooker Leg Kit - M7P, SMM7P	990060217	Cooker Hardware Kit - M7P, CM7P, SMM7P
990060204	Cooker Leg Kit - CM7P	990060218	Cooker Hardware Kit - CSMM7P
990060205	Cooker Leg Kit - CSMM7P	990060219	Side Shelf Hardware Kit - SMM7P
990060206	Burner Mount Kit - M7P, SMM7P	911060033	Deep Fry Thermometer
990060207	Burner Mount Kit - CM7P	990060220	Grill Bracket Kit - All models

STOP!

DO NOT RETURN TO RETAILER
For Assembly Assistance, Missing or Damaged Parts
Call: MASTERBUILT Customer Service at 1-800-489-1581

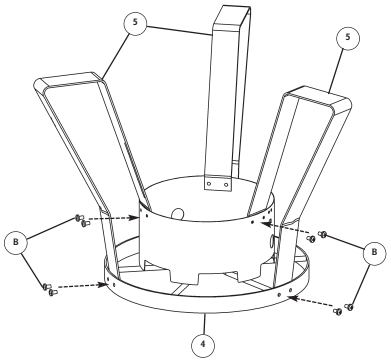

Before assembly read instructions carefully.

Tools needed for assembly:

Phillips Head Screwdriver
Adjustable Wrench

Assemble unit on a clean, flat surface.

Do not tighten screws all the way. Cooker stand legs may need to be adjusted during assembly.

STEP 1.

Attach cooker stand legs (5) to cooker head (4) using phillips head flange screws (B) as shown.

Now tighten all screws.

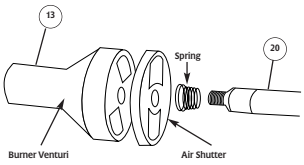

STEP 2.

Burner Hose Assembly:

Place air shutter on burner (13) venturi.

Slide small end of spring onto end of hose (20).

Thread end of hose into burner clockwise to tighten. Do NOT overtighten.

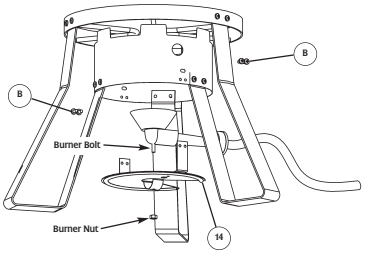

Make sure open end of burner mount faces between cooker stand legs. This is necessary in order to mount burner/hose assembly.

STEP 3a.

Attach burner mount (14) to cooker head using phillips head flange screw (B) as shown.

STEP 3b.

Remove burner nut from burner/hose assembly.

Insert burner bolt through burner mount.

Secure with burner nut.

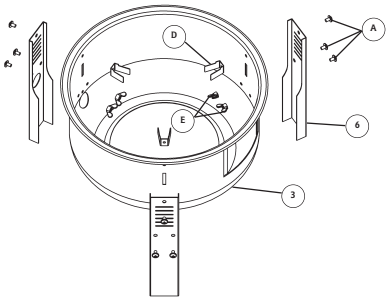

STEP 4.

Place base pan (3) on top of cooker stand and align slots with cooker stand legs.

Align bottom two holes of each smoker leg (6) with base pan and secure with phillips head flange screw (A) and wing nuts (E).

Position grill bracket (D) on inside of base pan so it is aligned with top hole of smoker leg. Insert phillips head flange screw (A) through smoker leg, base pan and grill bracket.