This Owner's Manual is provided and hosted by Appliance Factory Parts.

Appliance Factory Parts
Experts in BBQ, Humidifier, & Appliance Parts
1-800-955-7075

White Mountain Hearth HVFR18P Owner's Manual

Shop genuine replacement parts for White Mountain Hearth HVFR18P

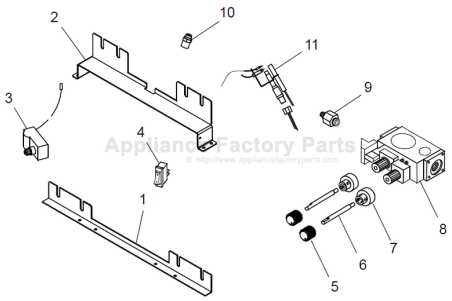

Find Your White Mountain Hearth Fireplace Parts - Select From 539 Models

-------- Manual continues below --------

HearthRite

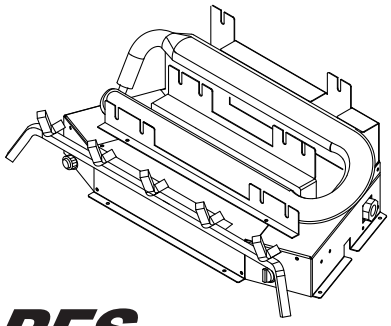

VENT-FREE GAS LOG HEATER

YELLOW FLAME DUAL BURNER CHASSIS

HVFM18N, HVFM18P
HVFM24N, HVFM24P
HVFR18N, HVFR18P
HVFR24N, HVFR24P

PFS® US

⚠ WARNING: If the information in this manual is not followed exactly, a fire or explosion may result causing property damage, personal injury or loss of life.

— **Do not store or use gasoline or other flammable vapors and liquids in the vicinity of this or any other appliance.**

— **WHAT TO DO IF YOU SMELL GAS**
- **Do not try to light any appliance.**
- **Do not touch any electrical switch; do not use any phone in your building.**
- **Immediately call your gas supplier from a neighbor's phone. Follow the gas supplier's instructions.**
- **If you cannot reach your gas supplier, call the fire department.**

— **Installation and service must be performed by a qualified installer, service agency or the gas supplier.**

⚠ WARNING: This appliance is equipped for either natural or propane gas. Field conversion is not permitted.

Questions, problems, missing parts? Before returning to your retailer, call our customer service department at 1-618-233-7420 or 1-800-851-3153
www.hearthrite.com

TABLE OF CONTENTS

Specifications 3
Safety 3
Product Features 5
Local Codes 5
Qualified Installing Agency 6
Water Vapor: A By-Product Of Unvented Room Heaters 6
Unpacking 6
Air For Combustion and Ventilation 7
Installation 9
Operation 18
Inspecting Burners 21
Care And Maintenance 22
Troubleshooting 23
Parts 26
Replacement Parts 26
Technical Services 27
Accessories 27
Warranty 28

SAVE THIS BOOK

INSTALLER: Leave this manual with the appliance.
CONSUMER: Retain this manual for future reference.

This is an unvented gas-fired heater. It uses air (oxygen) from the room in which it is installed. Provisions for adequate combustion and ventilation air must be provided. Refer to *Air for Combustion and Ventilation* section on page 7 of this manual.

⚠ WARNING: Improper installation, adjustment, alteration, service or maintenance can cause injury or property damage. Refer to this manual for correct installation and operational procedures. For assistance or additional information consult a qualified installer, service agency or the gas supplier.

This appliance may be installed in an aftermarket,* permanently located, manufactured (mobile) home, where not prohibited by local codes.

This appliance is only for use with propane or natural gas. Field conversion by any other means including the use of a kit is not permitted.

*** Aftermarket: Completion of sale, not for purpose of resale, from the manufacturer.**

SPECIFICATIONS

MODEL	HVFM18N	HVFM18P	HVFM24N	HVFM24P
Ignition	Electronic Piezo	Electronic Piezo	Electronic Piezo	Electronic Piezo
Gas Type	Natural	Propane/LP	Natural	Propane/LP
Input Rating Max.	29,000 BTU/Hr	26,000 BTU/Hr	35,000 BTU/Hr	33,000 BTU/Hr
Min.	10,500 BTU/Hr	22,000 BTU/Hr	16,000 BTU/Hr	19,000 BTU/Hr
Manifold Pressure	3" W.C.	8" W.C.	3.0" W.C.	8" W.C.
Inlet Gas Pressure* (inches of water)	Max. 10.5" W.C.	Max. 14" W.C.	Max. 10.5" W.C.	Max. 14" W.C.
	Min. 5" W.C.	Min. 11" W.C.	Min. 5" W.C.	Min. 11" W.C.

MODEL	HVFR18N	HVFR18P	HVFR24N	HVFR24P
Ignition	Electronic Piezo	Electronic Piezo	Electronic Piezo	Electronic Piezo
Gas Type	Natural	Propane/LP	Natural	Propane/LP
Input Rating Max.	32,000 BTU/Hr	27,000 BTU/Hr	35,000 BTU/Hr	39,000 BTU/Hr
Min.	22,000 BTU/Hr	23,000 BTU/Hr	25,000 BTU/Hr	33,000 BTU/Hr
Manifold Pressure	3.5" W.C.	10" W.C.	3.5" W.C.	10" W.C.
Inlet Gas Pressure* (inches of water)	Max. 10.5" W.C.	Max. 14" W.C.	Max. 10.5" W.C.	Max. 14" W.C.
	Min. 5" W.C.	Min. 11" W.C.	Min. 5" W.C.	Min. 11" W.C.

* For purposes of input adjustment.

SAFETY

IMPORTANT: Read this owner's manual carefully and completely before trying to assemble, operate, or service this heater. Improper use of this heater can cause serious injury or death from burns, fire, explosion, electrical shock and carbon monoxide poisoning. Failure to follow these instructions will void the warranty.

Only a qualified installer, service agent, or local gas supplier may install and service this product.

⚠ WARNING: Keep the appliance area clear and free from combustible materials, gasoline, and other flammable vapors and liquids.

This appliance is only for use with the type of gas indicated on the rating plate. This appliance is not convertible for use with other gases.

⚠ WARNING: Models HVFM18N, HVFM24N, HVFR18N and HVFR24N are equipped for natural gas. Models HVFM18P, HVFM24P, HVFR18P and HVFR24P are equipped for propane/LP gas. Field conversion is not permitted.

⚠ DANGER: Carbon monoxide poisoning may lead to death!

Carbon Monoxide Poisoning: Early signs of carbon monoxide poisoning resemble the flu, with headaches, dizziness or nausea. If you have these signs, the heater may not be working properly. Get fresh air at once! Have heater serviced. Some people are more affected by carbon monoxide than others. These include pregnant women, people with heart or lung disease or anemia, those under the influence of alcohol and those at high altitudes.

Natural and Propane/LP Gas: Natural and Propane/LP gas are odorless. An odor-making agent is added to the gas. The odor helps you detect a gas leak. However, the odor added to the gas can fade. Gas may be present even though no odor exists.

⚠ WARNING: Do not use any accessory not approved for use with this log set.

⚠ WARNING: Do not allow fans to blow directly into the heater. Avoid any drafts that alter burner flame pattern including ceiling fans. Altered burner patterns can cause sooting.

⚠ WARNING: Any change to this heater or its controls can be dangerous.

⚠ WARNING: Do not place clothing or other flammable material on or near the appliance. Never place any objects in the heater.

⚠ WARNING: Due to high temperatures, the appliance should be located out of traffic and away from furniture and draperies.

⚠ WARNING: Heater becomes very hot when running. Keep children and adults away from hot surfaces to avoid burns or clothing ignition. Heater will remain hot for a time after shutoff. Allow surfaces to cool before touching.

⚠ WARNING: Carefully supervise young children when they are in the room with the heater.

⚠ WARNING: Make sure a fireplace screen is in place before running heater.

1. Do not place Propane/LP supply tank(s) inside any structure. Propane/LP supply tank(s) must be placed outdoors.
2. This heater should not be installed in a bedroom or bathroom unless installed as a vented appliance.
3. This heater needs fresh air ventilation to run properly. This heater has an Oxygen Depletion Sensing (ODS) safety shutoff system. The ODS shuts down the heater if not enough fresh air is available. See *Air for Combustion and Ventilation*, pages 7 and 8. If heater keeps shutting off, see *Troubleshooting*, page 23.
4. Do not add extra logs or ornaments such as pine cones, vermiculite, or rock wool. Using these added items can cause sooting. Do not add lava rock around base. Rock and debris could fall into the control area of heater. After servicing, always replace screen before operating heater.
5. If fireplace has glass doors, never operate this heater with glass doors closed. If you operate heater with doors closed, heat will build-up inside fireplace and cause glass to burst. If fireplace opening has vents at the bottom, you must open the vents before operating log set. Always operate heater with glass doors fully open.

SAFETY

6. This log heater is designed to be smokeless. If logs ever appear to be smoking, turn off heater and call a qualified service technician. *NOTE: During initial operating, slight smoking could occur due to log curing and heater burning off manufacturing residues.*
7. To prevent the creation of soot, follow the instructions under Care and Maintenance page 22.
8. Do not run heater:
   - Where flammable liquids or vapors are used or stored.
   - Under dusty conditions.
9. Before using furniture polish, wax, carpet cleaner, or similar products, turn heater off. If heated, the vapors from these products may create a white powder residue within burner box or on adjacent walls or furniture.
10. Do not use heater if any part has been under water. Immediately call a qualified service technician to inspect the room heater and to replace any part of the control system and any gas control which has been under water.
11. Turn off and let cool before servicing. Only a qualified service person should service and repair heater.
12. Operating heater above elevations of 4,500 feet could cause pilot outage.
13. Do not use this heater if any log is broken. Do not operate heater if a log is chipped (dime-size or larger).
14. To prevent performance problems, do not use propane/LP fuel tank of less than 100 lbs. capacity.
15. Solid fuels should not be burned in fireplace in which a vent-free log set is installed. Do not use this heater to cook food or burn paper or other objects.

PRODUCT FEATURES

This log set has been tested and approved to ANSI Z21.11.2 standard for Unvented Heaters and can be operated with the flue damper closed. State and local codes in some areas prohibit the use of vent-free heaters.

SAFETY PILOT

This heater has a pilot with an Oxygen Depletion Sensing (ODS) safety shutoff system. The ODS/pilot shuts off the heater if there is not enough fresh air.

PIEZO IGNITION SYSTEM

This heater is equipped with an electronic piezo control system. This system requires 1 AAA battery (provided).

LOCAL CODES

Install and use heater with care. Follow all local codes. In the absence of local codes, use the latest edition of *The National Fuel Gas Code, ANSI Z223.1/NFPA 54**.

*Available from:

American National Standards Institute, Inc.
1430 Broadway
New York, NY 10018

National Fire Protection Association, Inc.
1 Batterymarch Park
Quincy, MA 02269-9101

State of Massachusetts: The installation must be made by a licensed plumber or gas fitter in the Commonwealth of Massachusetts.

Sellers of unvented propane or natural gas-fired supplemental room heaters shall provide to each purchaser a copy of 527 CMR 30 upon sale of the unit.

In the State of Massachusetts the gas cock must be a T-handle type. The State of Massachusetts requires that a flexible appliance connector cannot exceed three feet in length.

UNPACKING

⚠ CAUTION: Do not remove the metal data plates from the burner pan. The data plates contain important product information.

1. Remove logs and burner base assembly from carton. *NOTE: Do not pick up burner base assembly by burners as this could damage heater. Always handle base assembly by grate.*
2. Remove all protective packaging applied to logs and base for shipment.
3. Check all items for any shipping damage. If damaged, promptly inform dealer where you purchased the heater.

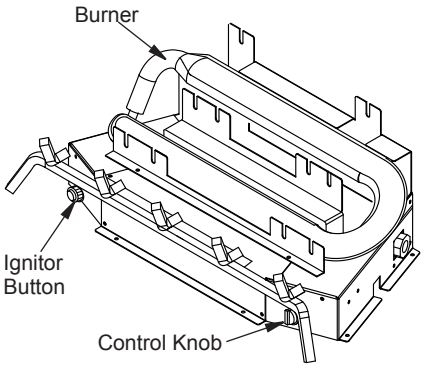

Figure 1 - Product Identification

QUALIFIED INSTALLING AGENCY

Only a qualified agency should install and replace gas piping, gas utilization equipment or accessories, and repair and equipment servicing. The term "qualified agency" means any individual, firm, corporation, or company that either in person or through a representative is engaged in and is responsible for:

a) Installing, testing, or replacing gas piping or

b) Connecting, installing, testing, repairing, or servicing equipment; that is experienced in such work; that is familiar with all precautions required; and that has complied with all the requirement of the authority having jurisdiction.

In areas that prohibit the use of vent-free heaters, the log set has been tested and approved to the ANSI Z21.60 standard for Vented Decorative Logs. When used as a vented log set refer to additional instructions on page 12.

WATER VAPOR: A BY-PRODUCT OF UNVENTED ROOM HEATERS

Water vapor is a by-product of gas combustion. An unvented room heater produces approximately one (1) ounce (30 mL) of water for every 1,000 BTUs (0.3 KWs) of gas input per hour. Unvented room heaters are recommended as supplemental heat (a room) rather than a primary heat source (an entire house). In most supplemental heat applications, the water vapor does not create a problem. In most applications, the water vapor enhances the low humidity atmosphere experienced during cold weather.

The following steps will help ensure that water vapor does not become a problem.

1. Be sure the heater is sized properly for the application, including ample combustion air and circulation air.
2. If high humidity is experienced, a dehumidifier may be used to help lower the water vapor content of the air.
3. Do not use an unvented room heater as the primary heat source.

AIR FOR COMBUSTION AND VENTILATION

⚠ WARNING: This heater shall not be installed in a confined space or unusually tight construction unless provisions are provided for adequate combustion and ventilation air. Read the following instructions to insure proper fresh air for this and other fuel-burning appliances in your home.

Today's homes are built more energy efficient than ever. New materials, increased insulation and new construction methods help reduce heat loss in homes. Home owners weather strip and caulk around windows and doors to keep the cold air out and the warm air in. During heating months, home owners want their homes as airtight as possible.

While it is good to make your home energy efficient, your home needs to breathe. Fresh air must enter your home. All fuel-burning appliances need fresh air for proper combustion and ventilation.

Exhaust fans, fireplaces, clothes dryers and fuel burning appliances draw air from the house to operate. You must provide adequate fresh air for these appliances. This will insure proper venting of vented fuel-burning appliances.

⚠ WARNING: This heater shall not be installed in a room or space unless the required volume of indoor combustion air is provided by the method described in the *National Fuel Gas Code, ANSI Z223.1/NFPA 54,* the *International Fuel Gas Code,* or applicable local codes.

⚠ WARNING: If the area in which the heater may be operated is smaller than that defined as an unconfined space or if the building is of unusually tight construction, provide adequate combustion and ventilation air by one of the methods described in the *National Fuel Gas Code, ANSI Z223.1/NFPA 54,* the *International Fuel Gas Code,* or applicable local codes.

VENTILATION AIR

Ventilation Air From Inside Building

This fresh air would come from an adjoining unconfined space. When ventilating to an adjoining unconfined space, you must provide two permanent openings: one within 12" of the ceiling and one within 12" of the floor on the wall connecting the two spaces (see options 1 and 2, Figure 2). You can also remove door into adjoining room (see option 3, Figure 2). Follow the *National Fuel Gas Code, ANSI Z223.1/NFPA 54, Air for Combustion and Ventilation* for required size of ventilation grills or ducts.

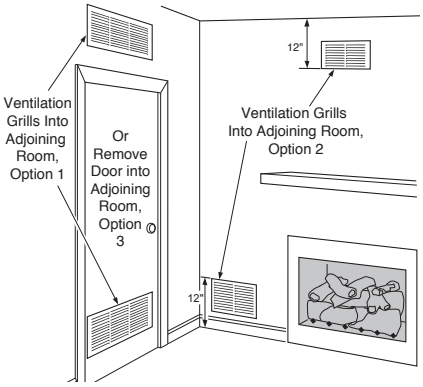

Figure 2 - Ventilation Air from Inside Building

Ventilation Air From Outdoors

Provide extra fresh air by using ventilation grills or ducts. You must provide two permanent openings: one within 12" of the ceiling and one within 12" of the floor. Connect these items directly to the outdoors or spaces open to the outdoors. These spaces include attics and crawl spaces. Follow the *National Fuel Gas Code, ANSI Z223.1/NFPA 54, Air for Combustion and Ventilation* for required size of ventilation grills or ducts.

IMPORTANT: Do not provide openings for inlet or outlet air into attic if attic has a thermostat-controlled power vent. Heated air entering the attic will activate the power vent. Rework worksheet, adding the space of the adjoining unconfined space. The combined spaces must have enough fresh air to supply all appliances in both spaces.

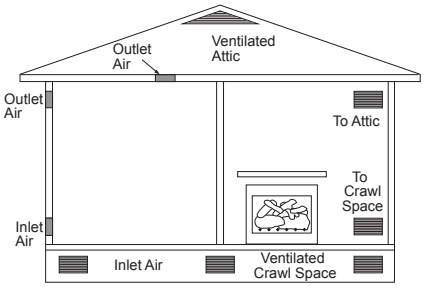

Figure 3 - Ventilation Air from Outdoors

NOTICE: This heater is intended for use as supplemental heat. Use this heater along with your primary heating system. Do not install this heater as your primary heat source. If you have a central heating system, you may run system's circulating blower while using heater. This will help circulate the heat throughout the house. In the event of a power outage, you can use this heater as your primary heat source.

⚠ WARNING: A qualified service person must install heater. Follow all local codes.

⚠ WARNING: Before installing in a solid fuel burning fireplace, the chimney flue and firebox must be cleaned of soot, creosote, ashes and loose paint by a qualified chimney cleaner. Creosote will ignite if highly heated. A dirty chimney flue may create and distribute soot within the house. Inspect chimney flue and firebox for damage. If damaged, repair flue before operating heater.

⚠ WARNING: Seal any fresh air vents or ash clean-out doors located on floor or wall of fireplace. If not, drafting may cause pilot outage or sooting. Use a heat-resistant sealant. Do not seal chimney flue damper.

⚠ WARNING: Never install the heater

- **in a bedroom or bathroom**
- **in a recreational vehicle**
- **where curtains, furniture, clothing, or other flammable objects are less than 36" from the front, 42" from top, or 16" from sides of the heater.**
- **in high traffic areas**
- **in windy or drafty areas**

⚠ CAUTION: This heater creates warm air currents. These currents move heat to wall surfaces next to heater. Installing heater next to vinyl or cloth wall coverings or operating heater where impurities (such as tobacco smoke, aromatic candles, cleaning fluids, oil or kerosene lamps, etc.) in the air exist, may discolor walls or cause odors.

NOTICE: State or local codes may only allow operation of this appliance in a vented configuration. Check your state or local codes.

⚠ WARNING: This appliance is designed for installation in only a solid-fuel burning masonry or UL 127 factory-built fireplace or in a listed ventless firebox enclosure. Exception: DO NOT install this appliance in a factory-built fireplace that includes instructions stating it has not been tested or should not be used with unvented gas logs.

IMPORTANT: Vent-free heaters add moisture to the air. Although this is beneficial, installing heater in rooms without enough ventilation air may cause mildew to form too much moisture. See Air for Combustion and Ventilation, pages 7 and 8.

Before beginning assembly or operation of the product, make sure all parts are present. Compare parts with package contents list. If any part is missing or damaged, do not attempt to assemble, install or operate the product. Contact customer service for replacement parts.

Before installing heater, make sure you have the items listed below:

- Hardware package (provided with heater)
- Electric drill with 3/16" drill bit
- Phillips screwdriver

CHECK GAS TYPE

Be sure your gas supply is right for your heater. Otherwise, call dealer where you bought the heater for proper type heater.

CLEARANCES TO COMBUSTIBLES

⚠ WARNING: Maintain the minimum clearances. If possible, provide greater clearances from floor, ceiling, and adjoining wall. Measure from outermost point of heater.

Minimum Fireplace Clearance To Combustible Materials
Side Wall 16", Ceiling 42", Front 36"

LOG SIZING REQUIREMENTS

Minimum Firebox Size

18" Log Set: Height 20", Depth 13", Front Width 29", Rear Width 22"

24" Log Set: Height 20", Depth 14", Front Width 30", Rear Width 23"

Minimum Clearances For Side Combustible Material, Side Wall and Ceiling

A. Clearance from the side of the fireplace cabinet to any combustible material and wall should follow diagram in Figure 4.

B. Clearance from the top of the fireplace opening to the ceiling must not be less than 42".

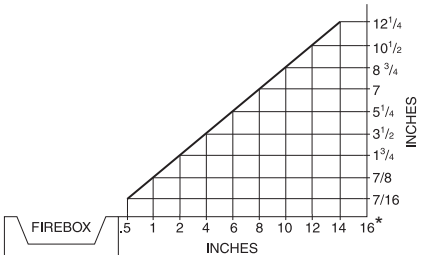

*Minimum 16" from Side Wall

Figure 4 - Minimum Clearance for Combustible to Wall

Minimum Noncombustible Material Clearances

If Not Using Mantel

Note: If using a mantel, proceed to *If Using Mantel*, page 11. *If not using a mantel, follow the information below.*

You must have noncombustible material(s) above the fireplace opening. Noncombustible materials (such as slate, marble, tile, etc.) must be at least 1/2" thick. With sheet metal, you must have noncombustible material behind it. Noncombustible material must extend at least 12" up (for all models). See Figure 5 for minimum clearances.

Requirements for Safe Installation

(A) 12" or more: Noncombustible material OK.

(A) Between 8" and 12": Install fireplace hood accessory.

(A) Less than 8": Noncombustible material must be extended to at least 8". See *Between 8" and 12"*, above. If you cannot extend material, you must operate heater with flue damper open.

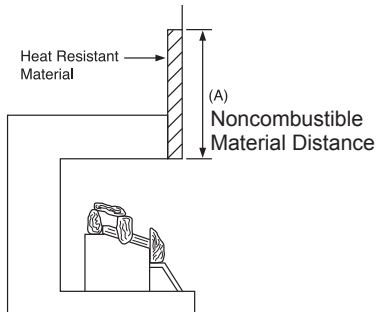

Figure 5 - Heat Resistant Material (Slate, Marble, Tile, etc.) Above Fireplace

NOTICE: This heater may be used as a vented product. If so, you must always operate log set with chimney flue damper open. If running log set with damper open, noncombustible material above fireplace opening is not needed. Go to *Installing Damper Clamp Accessory for Vented Operation*, page 12.

If Using Mantel

You must have noncombustible material(s) above the fireplace opening. Noncombustible materials (such as slate, marble, tile, etc.) must be at least 1/2" thick. With sheet metal, you must have noncombustible material behind it. Noncombustible material must extend at least 8" up. If noncombustible material is less than 12", you must install the fireplace hood accessory. Even if noncombustible material is more than 12", you may need the hood accessory to deflect heat away from your mantel shelf. See Figures 5, 6 and 7, for minimum clearances.

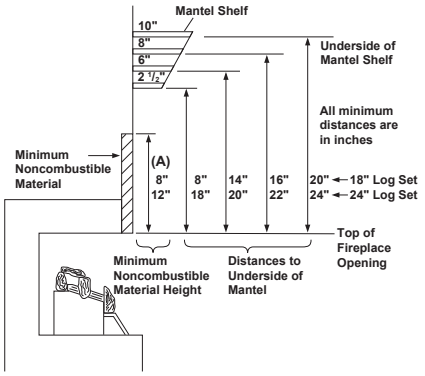

Figure 6 - Minimum Mantel Clearances Without Using Hood

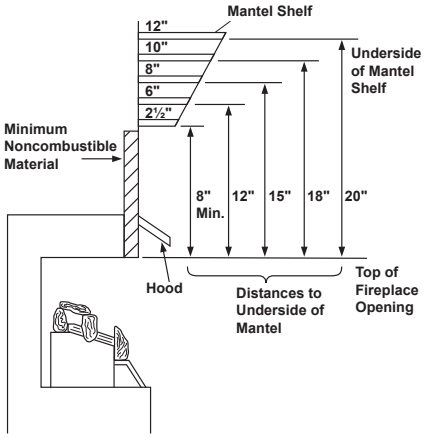

Figure 7 - Minimum Mantel Clearances When Using Hood

MANTEL CLEARANCES

In addition to meeting noncombustible material clearances, you must also meet required clearances between fireplace opening and mantel shelf. If you do not meet the clearances listed below, you will need a hood.

Determining Minimum Mantel Clearance

If you meet minimum clearance between mantel shelf and top of fireplace opening, a hood is not required (see Figure 6).

Determining Minimum Mantel Clearance When Using a Hood

If minimum clearances in Figure 6 are not met, you must have a hood. When using a hood there are still certain minimum mantel clearances required. Follow minimum clearances shown in Figure 7, when using hood.

NOTICE: Surface temperatures of adjacent walls and mantels become hot during operation. Walls and mantels above the firebox may become hot to the touch. If installed properly, these temperatures meet the requirement of the national product standard. Follow all minimum clearances shown in this manual.

NOTICE: If your installation does not meet the minimum clearances shown, you must do one of the following:

- **operate the logs only with the flue damper open**
- **raise the mantel to an acceptable height**
- **move the mantel**

FLOOR CLEARANCES

A. If installing appliance on the floor level, you must maintain the minimum distance of 14" to combustibles (see Figure 8).

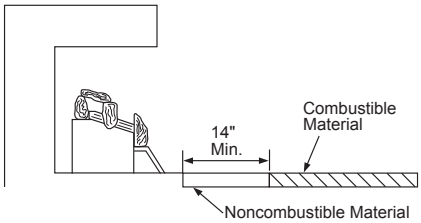

Figure 8 - Minimum Fireplace Clearances If Installed at Floor Level

B. If combustible materials are less than 14" to the fireplace, you must install appliance at least 5" above the combustible flooring (see Figure 9).

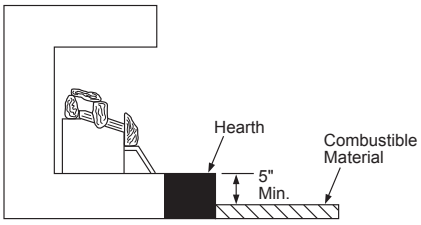

Figure 9 - Minimum Fireplace Clearances Above Combustible Flooring

INSTALLING DAMPER CLAMP ACCESSORY FOR VENTED OPERATION

When used as a vented heater, appliance must be installed only in a solid-fuel burning fireplace with a working flue constructed of noncombustible material. You may use this heater as a vented product. There are three reasons for operating your heater as a vented model:

1. The fireplace does not meet the clearance requirements for vent-free operation.
2. State or local codes do not permit vent-free operation.
3. You prefer vented operation.

If reasons number 1 or 2 above apply, you must permanently open chimney flue damper. You must install the damper clamp accessory (not provided). This will insure vented operation (see Figure 10). The damper clamp will keep damper open. Installation instructions are included with clamp accessory.

See chart below for the minimum permanent flue opening you must provide. Attach damper clamp so the minimum permanent opening will be maintained at all times.

Chimney Height	Minimum Permanent Flue Opening
6' to 15'	39 sq inches
15' to 30'	29 sq inches

Area of Various Standard Round Flues	
Diameter	**Area**
5"	20 sq inches
6"	29 sq inches
7"	39 sq inches
8"	51 sq inches

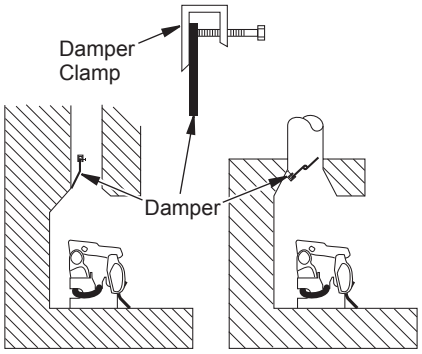

Figure 10 - Attaching Damper to Fireplace

INSTALLING HEATER BASE ASSEMBLY

⚠ WARNING: Do not remove data plates attached to the heater base assembly. The data plates contain important warranty information.

⚠ WARNING: You must secure this heater to fireplace floor. If not, heater will move when you adjust controls. Moving heater may cause a gas leak.

⚠ WARNING: If installing in a sunken fireplace, special care is needed. You must raise the fireplace floor to allow access to heater control panel. This will insure adequate air flow and guard against sooting and controls being damaged. Raise fireplace floor with noncombustible material. Make sure material is secure.

⚠ CAUTION: Do not pick up heater base assembly by burners. This could damage heater. Only handle base assembly by grates.

IMPORTANT: Make sure the heater burners are level. If heater is not level, heater will not work properly.

Installation Items Needed

- hardware package (provided with heater)
- electric drill with 3/16" masonry drill bit

1. Position heater base assembly in fireplace. Center base assembly left to right and front to back inside fireplace.
2. Mark screw locations through holes in mounting brackets (see Figure 11). If installing in a brick-bottom fireplace, mark screw locations in mortar joint of bricks.
3. Remove heater base from fireplace.
4. Drill holes at marked locations using 3/16" drill bit.
5. Apply pipe joint sealant lightly to fitting threads. Connect approved flexible gas hose to gas regulator of heater (see Figure 11). *Note: Never apply pipe sealant to flare fitting threads. Hold gas regulator with a wrench when connecting flexible gas hose.*
6. Attach base assembly to fireplace floor using two masonry screws provided in hardware package (see Figure 11).
7. Connect to gas supply. See *Connecting To Gas Supply*, page 14.

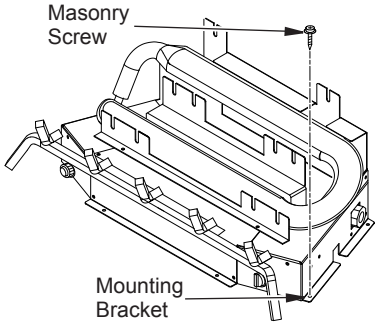

Figure 11 - Attaching Heater Base to Fireplace Floor

CONNECTING TO GAS SUPPLY

⚠ WARNING: A qualified service technician must connect heater to gas supply. Follow all local codes.

⚠ WARNING: This appliance requires a 1/2" NPT (National Pipe Thread) inlet connection to the pressure regulator.

⚠ WARNING: Do not overtighten gas connections.

⚠ WARNING: For natural gas, Never connect heater to private (non-utility) gas wells. This gas is commonly known as wellhead gas.

⚠ CAUTION: For propane/LP gas, never connect heater directly to the gas supply. This heater requires an external regulator (not supplied). Install the external regulator between the heater and propane/LP supply. Gas supplier provides external regulator for natural gas. The installer provides the external regulator for propane/LP gas.

⚠ CAUTION: Use only new, black iron or steel pipe. Internally tinned copper tubing may be used in certain areas. Check your local codes. Use pipe of 1/2" diameter or greater to allow proper gas volume to heater. If pipe is too small, undue loss of pressure will occur.

⚠ CAUTION: For natural gas, check your gas line pressure before connecting heater to gas line. Gas line pressure must be no greater than 10.5" WC. If gas line pressure is higher, heater regulator damage could occur.

⚠ CAUTION: Avoid damage to regulator. Hold gas regulator with wrench when connecting into gas piping and/or fittings.

⚠ CAUTION: Use pipe joint sealant that is resistant to gas (Propane/LP or Natural Gas).

Before installing heater, make sure you have the items listed below:

- external regulator for propane/LP unit only (supplied by installer)
- piping (check local codes)
- sealant (resistant to natural gas and propane/LP gas)
- equipment shutoff valve*
- test gauge connection*
- sediment trap
- tee joint
- pipe wrench
- flexible gas hose (check local codes)

* A CSA design-certified equipment shutoff valve with 1/8" NPT tap is an acceptable alternative to test gauge connection. Purchase the optional CSA design certified equipment shutoff valve from your dealer.

Typical Inlet Pipe Diameters

Use 1/2" black iron pipe or greater. Installation must include an equipment shutoff valve, union, and plugged 1/8" NPT tap. Locate NPT tap within reach for test gauge hook up. NPT tap must be upstream from heater (see Figure 13).

IMPORTANT: Install an equipment shutoff valve in an accessible location. The equipment shutoff valve is for turning on or shutting off the gas to the appliance.

For propane/LP installations, apply pipe joint sealant lightly to male threads. This will prevent excess sealant from going into pipe. Excess sealant in pipe could result in clogged heater valves.

For propane/LP gas, the installer must supply an external regulator. The external regulator will reduce incoming gas pressure. You must reduce incoming gas pressure to between 11" WC and 14" WC. If you do not reduce incoming gas pressure, heater regulator damage could occur. Install external regulator with the vent pointing down as shown in Figure 14. Pointing the vent down protects it from freezing rain or sleet.

Install sediment trap in supply line as shown in Figure 13. Place sediment trap where it is within reach for cleaning. Place sediment trap where trapped matter is not likely to freeze. A sediment trap traps moisture and contaminants. This keeps them from going into heater controls. If sediment trap is not installed or is installed wrong, heater may not run properly.

⚠ WARNING: Test all gas piping and connections for leaks after installing or servicing. Correct all leaks at once (see page 16).

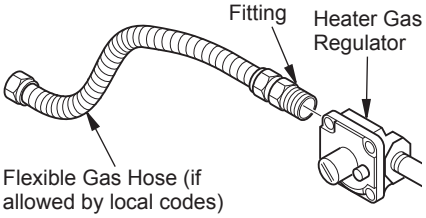

Figure 12 - Attaching Flexible Gas Hose to Heater Gas Regulator

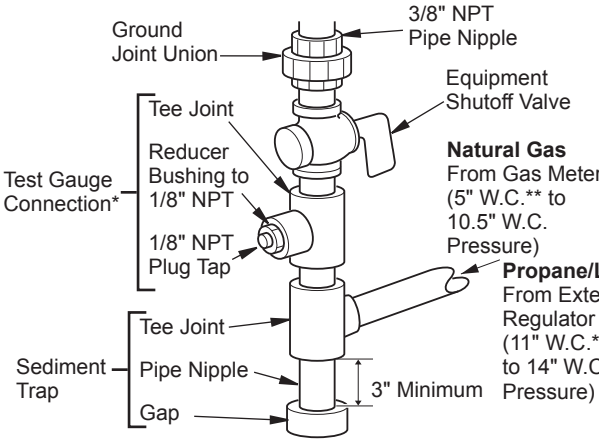

Figure 13 - Gas Connection

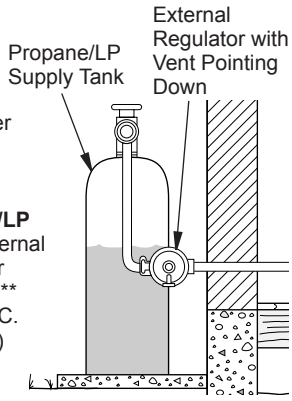

Figure 14 - External Regulator with Vent Pointing Down

* Purchase the optional CSA design-certified equipment shutoff valve from your dealer.

CHECKING GAS CONNECTIONS

⚠ WARNING: Test all gas piping and connections, internal and external to unit, for leaks after installing or servicing. Correct all leaks at once.

⚠ WARNING: Never use an open flame to check for a leak. Apply a noncorrosive leak detection fluid to all joints. If bubbles form, there is a leak. Correct all leaks at once.

PRESSURE TESTING GAS SUPPLY PIPING SYSTEM

Test Pressures In Excess Of 1/2 PSIG (3.5 kPa)

1. Disconnect heater with its appliance main gas valve (control valve) and equipment shutoff valve from gas supply piping system. Pressures in excess of 1/2 PSIG will damage heater regulator.
2. Cap off open end of gas pipe where equipment shutoff valve was connected.
3. Pressurize supply piping system by either opening propane/LP supply tank valve for propane/LP gas or opening main gas valve located on or near gas meter for natural gas or using compressed air.
4. Check all joints of gas supply piping system. Apply noncorrosive leak detection fluid to all joints. If bubbles form, there may be a leak.
5. Correct all leaks at once.
6. Reconnect heater and equipment shutoff valve to gas supply. Check reconnected fittings for leaks.

Test Pressures Equal To or Less Than 1/2 PSIG (3.5 kPa)

1. Close equipment shutoff valve (see Figure 15).
2. Pressurize supply piping system by either opening propane/LP supply tank valve for propane/LP gas or opening main gas valve located on or near gas meter for natural gas or using compressed air.

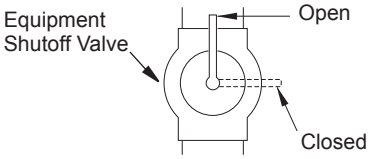

Figure 15 - Equipment Shutoff Valve

3. Check all joints from gas meter to equipment shutoff valve for natural gas or propane/LP supply to equipment shutoff valve for propane/LP (see Figure 16 or 17). Apply a noncorrosive leak detection fluid to all joints. Bubbles forming show a leak.
4. Correct all leaks at once.

PRESSURE TESTING HEATER GAS CONNECTIONS

1. Open equipment shutoff valve (see Figure 15).
2. Open main gas valve located on or near gas meter for natural gas or open propane/LP supply tank valve.
3. Make sure control knob of heater is in the OFF position.
4. Check all joints from equipment shutoff valve to control valve (see Figure 16 or 17). Apply a noncorrosive leak detection fluid to all joints. Bubbles forming show a leak.
5. Correct all leaks at once.
6. Light heater (see *Lighting Instructions* on page 19). Check all other internal joints for leaks.
7. Turn off heater (see *To Turn Off Gas Appliance*, page 20).

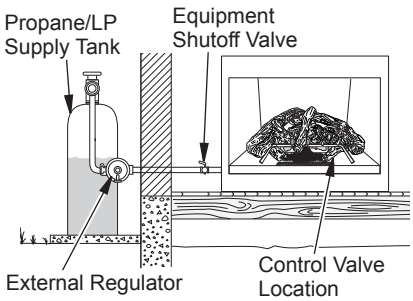

Figure 16 - Checking Gas Joints for Propane/LP Gas

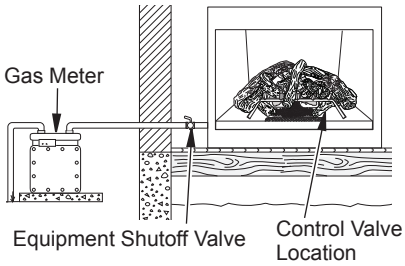

Figure 17 - Checking Gas Joints for Natural Gas

ELECTRICAL WIRING (MILLIVOLT)

⚠ CAUTION: Label all wires prior to disconnection when servicing controls. Wiring errors can cause improper and dangerous operation. Verify proper operation after servicing.

Note: The millivolt valve is a self-powered combination gas control that does not require 110 VAC to operate.

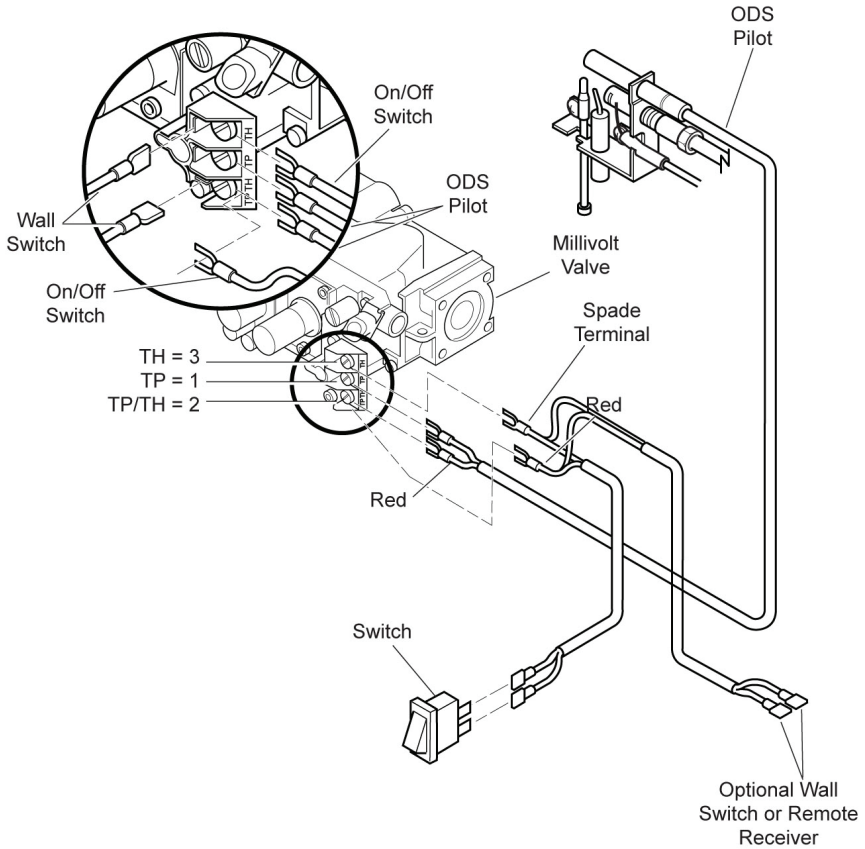

Figure 18 - Wiring Diagram

INSTALLING LOGS

See Owners Manual provided with your log set for proper log installation.

INSTALLATION

BATTERY INSTRUCTIONS

⚠ CAUTION: Do not dispose of batteries in fire, batteries may explode or leak.

- Battery is included.
- Remove battery when depleted.
- Be sure to observe proper polarity (+/-) when installing or replacing the battery. Damage due to improper battery installation may void the warranty on the product.
- For long periods of non-operation, remove batteries from all components for safety.

Unscrew ignitor cap and install a AAA battery with the + pointing out. Replace cap.

OPERATION

Avoid any drafts that alter burner flame patterns. Do not allow fans to blow directly into the fireplace. Do not place a blower inside the burn area of the firebox. Ceiling fans may create drafts that alter flame patterns. Sooting and improper burning will result.

During manufacturing, fabricating and shipping, various components of this appliance are treated with certain oils, films or bonding agents. These chemicals are not harmful but may produce annoying smoke and smells as they are burned off during the initial operation of the appliance, possibly causing headaches or eye or lung irritation. This is a normal and temporary occurrence.

The initial break-in operation should last two to three hours with the burner at the highest setting. Provide maximum ventilation by opening windows or doors to allow odors to dissipate. Any odors remaining after this initial break-in will be slight and will disappear with continued use.

This appliance must not be used with glass doors in the closed position. This can lead to pilot outages and severe sooting outside the fireplace.

Always operate heater with glass doors fully open.

FOR YOUR SAFETY READ BEFORE LIGHTING

⚠ WARNING: If you do not follow these instructions exactly, a fire or explosion may result causing property damage, personal injury or loss of life.

A. This appliance has a pilot which must be lighted by hand. When lighting the pilot, follow these instructions exactly.

B. BEFORE LIGHTING smell all around the appliance area for gas. Be sure to smell next to the floor because some gas is heavier than air and will settle on the floor.

WHAT TO DO IF YOU SMELL GAS

- **Do not try to light any appliance.**
- **Do not touch any electric switch; do not use any phone in your building.**
- **Immediately call your gas supplier from a neighbor's phone. Follow the gas supplier's instructions.**
- **If you cannot reach your gas supplier, call the fire department.**

C. Use only your hand to push in or turn the gas control knob. Never use tools. If the knob will not push in or turn by hand, don't try to repair it, call a qualified service technician. Force or attempted repair may result in a fire or explosion.

D. Do not use this appliance if any part has been under water. Immediately call a qualified service technician to inspect the appliance and to replace any part of the control system and any gas control which has been under water.

LIGHTING INSTRUCTIONS

⚠ WARNING: You must operate this heater with the screen in place. Make sure screen is installed before running heater.

NOTICE: During initial operation of new heater, burning logs will give off a paper-burning smell. Orange flame will also be present. Open damper or window to vent smell. This will only last a few hours.

1. STOP! Read the safety information on page 18.
2. Make sure equipment shutoff valve is fully open.
3. Turn gas control knob clockwise to the OFF position. Set the thermostat to the lowest setting and turn ON/OFF switch to the OFF position.
4. Wait five (5) minutes to clear out any gas. Then smell for gas around heater and near the floor. If you smell gas, STOP! Follow "B" in the safety information on page 18. If you do not smell gas, go to the next step.
5. Fro the OFF position, turn the gas control knob counterclockwise to the PILOT position. Press in control knob for five (5) seconds.

   Note: The first time that the heater is operated after connecting the gas supply, the control knob should be pressed for about thirty (30) seconds. This will allow air to bleed from the gas system. If pilot does not stay lit, refer to Troubleshooting, pages 23 though 25. Also contact a qualified service technician or gas supplier for repairs. Until repairs are made, light pilot with match.

   - If control knob does not pop up when released, contact a qualified service technician or gas supplier for repairs.
6. With control knob pressed in, push down and release ignitor button. This will light pilot. The pilot is attached to the rear of the burner. If needed, keep pressing ignitor button until pilot lights.

   Note: If pilot does not stay lit, refer to Troubleshooting, pages 23 though 25. Also contact a qualified service technician or gas supplier for repairs. Until repairs are made, light pilot with match. To light pilot with match, see Manual Lighting Procedure, page 20.
7. Keep control knob pressed in for 30 seconds after lighting pilot to prevent the flame detector from shutting off the gas whle the probe is warning up. After 30 seconds, release control knob.

   Note: If pilot goes out, repeat steps 3 through 7. This heater has a safety interlock system. Wait one (1) minute before lighting pilot again.
8. Turn control knob counterclockwise to the ON position. The main burner should light. Set control knob to the desired heating level.

   Note: Please wait one minute after shutting off heater to allow the control valve to reset before starting again.
9. This valve is equpped with a HI/LO feature. Set fireplace input as desired.
10. If heater will not operate, follow the instructions *To Turn Off Gas To Appliance,* page 20, and call your service technicial or gas supplier.
11. Wait 30 seconds before readjusting the heater when the control knob has been turned down to a lower setting.

⚠ CAUTION: Do not try to adjust heating levels by using the equipment shutoff valve.

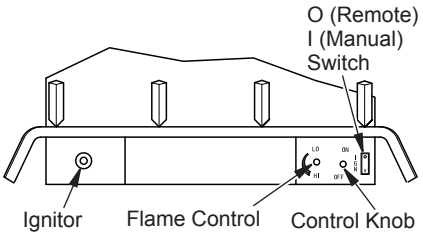

Figure 19 - Ignitor Button and Control Knob Locations

TO TURN OFF GAS TO APPLIANCE

Shutting Off Heater

Turn control knob clockwise to the OFF position.

Shutting Off Burner Only (pilot stays lit)

Turn control knob clockwise to the PILOT position.

MANUAL LIGHTING PROCEDURE

1. Follow steps 1 through 5 under *Lighting Instructions*, page 19.
2. With control knob in PILOT position, strike match, and hold near pilot. Press in control knob; pilot should light.
3. Keep control knob pressed in for 30 seconds after lighting pilot. After 30 seconds, release control knob.
4. Make sure the heater screen is in place before operating heater.

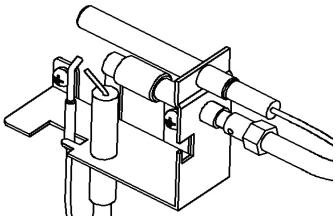

Figure 20 - Pilot Assembly

OPTIONAL HAND-HELD REMOTE OPERATION

Note: All remote control accessories must be purchased separately. Follow instructions included with the remote control.

NOTICE: You must light the pilot before using the hand-held remote control unit. See *Lighting Instructions*, page 19.

After lighting, let pilot flame burn for about one minute. Turn control knob to the ON position. Adjust flame adjustment knob anywhere between HI and LO. Slide the selector switch to the REMOTE position.

Note: The burner may light if hand-held remote was on when selector switch was last turned off. You can now turn the burner on and off with the hand-held remote control unit.

IMPORTANT: Do not leave the selector switch in the REMOTE or ON position when the pilot is not lit. This will drain the battery.

Remote Component

Please see other remote control instructions.

INSPECTING BURNERS

IMPORTANT: Owner's should check pilot flame pattern and burner flame pattern often. Incorrect flame patterns indicate the need for cleaning (see Care and Maintenance, page 22) or service.

⚠ WARNING: Only a qualified service person should service and repair heater. This includes maintenance requiring replacement or alteration of components.

PILOT FLAME PATTERN

Figures 21 and 23 show a correct pilot flame pattern. Figure 22 and 24 shows an incorrect pilot flame pattern. The incorrect pilot flame is not touching the thermocouple. This will cause the thermocouple to cool, which shuts the heater off.

If pilot flame pattern is incorrect, as shown in Figure 22 or 24

- turn heater off (see *To Turn Off Gas to Appliance*, page 20)
- see *Troubleshooting* pages 23 through 25.

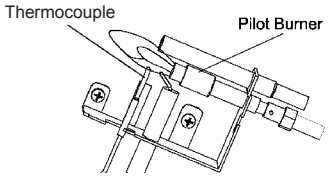

Figure 21 - Correct Pilot Flame Pattern Models VF(18,24)NA-2

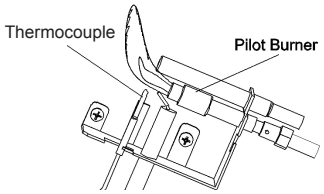

Figure 22 - Incorrect Pilot Flame Pattern Models VF(18,24)NA-2

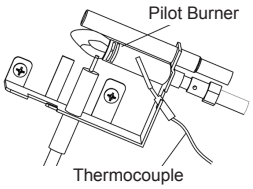

Figure 23 - Correct Pilot Flame Pattern Models VF(18,24)LA-2

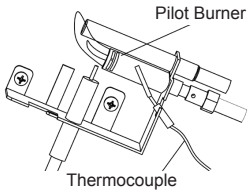

Figure 24 - Incorrect Pilot Flame Pattern Models VF(18,24)LA-2

BURNER FLAME PATTERN

Figure 25 shows a correct burner flame pattern. Figure 26 shows an incorrect burner flame pattern. If burner flame pattern is incorrect then:

- turn heater off (see *To Turn Off Gas to Appliance*, page 20).
- see *Troubleshooting* pages 23 through 25.

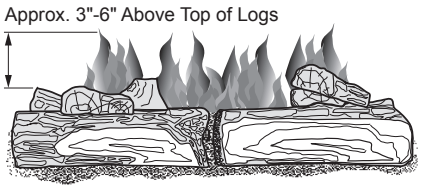

Figure 25 - Correct Burner Flame Pattern

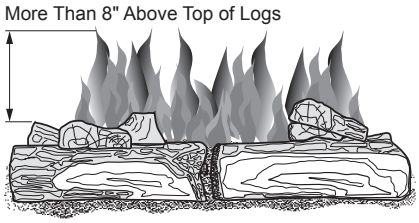

Figure 26 - Incorrect Burner Flame Pattern

BURNER PRIMARY AIR HOLES

Air is drawn into the burner through the holes in the fitting at the entrance to the burner. These holes may become blocked with dust or lint. Periodically inspect these holes for any blockage and clean as necessary. Blocked air holes will create soot.

⚠ WARNING: Turn off heater and let cool before servicing.

⚠ CAUTION: You must keep control areas, burner, and circulating air passageways of heater clean. Inspect these areas of heater before each use. Have heater inspected yearly by a qualified service technician. Heater may need more frequent cleaning due to excessive lint from carpeting, bedding material, pet hair, etc.

⚠ WARNING: Failure to keep the primary air opening(s) of the burner(s) clean may result in sooting and property damage.

MAIN BURNER

Periodically inspect all burner flame holes with the heater running. All slotted burner flame holes should be open with yellow flame present. All round burner flame holes should be open with a small blue flame present. Some burner flame holes may become blocked by debris or rust, with no flame present. If so, turn off the heater and let it cool, and remove blockage or replace burner. Blocked burner flame holes will create soot.

BURNER INJECTOR HOLDER AND PILOT AIR INLET HOLE

We recommend that you clean the unit every 2,500 hours of operation or every three months. We also recommend that you keep the burner tube and pilot assembly clean and free of dust and dirt. To clean these parts we recommend using compressed air no greater than 30 PSI. Your local computer store, hardware store, or home center may carry compressed air in a can. You can use a vacuum cleaner in the blow position. If using compressed air in a can, please follow the directions on the can. If you don't follow directions on the can, you could damage the pilot assembly.

1. Shut off the unit, including the pilot. Allow the unit to cool for at least thirty minutes.
2. Inspect burner, pilot and primary air inlet holes on injector for dust and dirt (see Figure 27).
3. Blow air through the ports/slots and holes in the burner. Also clean the pilot assembly.
4. Check the injector holder located at the end of the burner tube again. Remove any large particles of dust, dirt, lint, or pet hair with a soft cloth or vacuum cleaner nozzle.
5. Blow air into the primary air holes on the injector holder.
6. In case any large clumps of dust have now been pushed into the burner. Repeat steps 3 and 4.

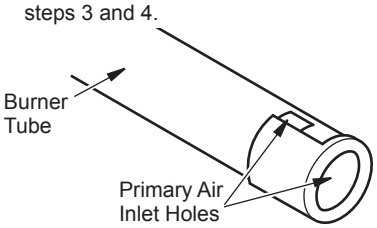

Figure 27 - Burner and Injector Holder

ODS/PILOT

Use a vacuum cleaner, pressurized air, or a small, soft bristled brush to clean.

A yellow tip on the pilot flame indicates dust and dirt in the pilot assembly. There is a small pilot air inlet hole about 2" from where the pilot flame comes out of the pilot assembly (see Figure 28). With the unit off, lightly blow air through the air inlet hole. You may blow through a drinking straw if compressed air is not available.

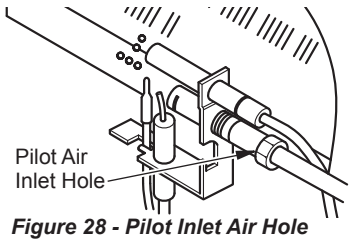

Figure 28 - Pilot Inlet Air Hole (Propane/LP Shown)

LOGS

- If you remove logs for cleaning, refer to your log set owners manual to properly replace logs.
- Replace log(s) if broken or chipped (dime-size or larger).

TROUBLESHOOTING

⚠ WARNING: If you smell gas:
- **Shut off gas supply.**
- **Do not try to light any appliance.**
- **Do not touch any electrical switch; do not use any phone in your building.**
- **Immediately call your gas supplier from a neighbor's phone. Follow the gas supplier's instructions.**
- **If you cannot reach your gas supplier, call the fire department.**

⚠ WARNING: Only a qualified service technician should service and repair heater. Make sure that power is turned off before proceeding. Turn off and let cool before servicing.

⚠ CAUTION: Never use a wire, needle, or similar object to clean ODS/pilot. This can damage ODS/ pilot unit.

IMPORTANT: Operating heater where impurities in air exist may create odors. Cleaning supplies, paint, paint remover, cigarette smoke, cements and glues, new carpet or textiles, etc., create fumes. These fumes may mix with combustion air and create odors.

Note: All troubleshooting items are listed in order of operation.

Problem	Possible Cause	Corrective Action
When ignitor button is pressed in, there is no spark at ODS/pilot.	1. Ignitor electrode is positioned wrong. Ignitor electrode is broken. 2. Ignitor electrode is not connected to ignitor cable. 3. Ignitor cable is pinched or wet. 4 Broken ignitor cable. 5. Bad piezo ignitor. 6. Low battery.	1. Replace electrode. 2. Replace ignitor cable. 3. Free ignitor cable if pinched by any metal or tubing. Keep ignitor cable dry. 4. Replace ignitor cable. 5. Replace piezo ignitor. 6. Replace battery.
When ignitor button is pressed in there is a spark at ODS/pilot but no ignition.	1. Gas supply is turned off or equipment shutoff valve is closed. 2. Control knob not fully pressed in while pressing ignitor button. 3. Air in gas lines (new installation or recent gas interruption). 4. ODS / pilot is clogged. 5. Control knob not in PILOT position. 6. Depleted gas supply (propane).	1. Turn on gas supply or open equipment shutoff valve. 2. Fully press in control knob while pressing ignitor button. 3. Continue holding down control knob. Repeat igniting operation until air is removed. 4. Clean ODS/pilot (see *Care and Maintenance*, page 22) or replace ODS/pilot assembly. 5. Turn control knob to PILOT position. 6. Contact local propane/LP gas company.

TROUBLESHOOTING

Problem	Possible Cause	Corrective Action
ODS/pilot lights but flame goes out when control knob is released.	1. Control knob is not fully pressed in. 2. Control knob is not pressed in long enough. 3. Equipment shutoff valve is not fully open. 4. Thermocouple connection is loose at control valve. 5. Pilot flame not touching thermocouple, which allows thermocouple to cool, causing pilot flame to go out. This problem could be caused by one or both of the following: A) Low gas pressure B) Dirty or partially clogged ODS/pilot 6. Thermocouple damaged. 7. Control valve damaged.	1. Press in control knob fully. 2. After ODS/pilot lights, keep control knob pressed in 30 seconds. 3. Fully open equipment shutoff valve. 4. Hand tighten until snug, and then tighten 1/4 turn more. 5. A) Contact local natural or propane/LP gas company B) Clean ODS/pilot (see *Care and Maintenance*, page 22) or replace ODS/pilot assembly 6. Replace thermocouple. 7. Replace control valve.
Burner does not light after ODS/pilot is lit.	1. Burner orifice is clogged. 2. Burner orifice diameter is too small. 3. Inlet gas pressure is too low.	1. Clean burner orifice (see *Care and Maintenance*, page 22) or replace burner orifice. 2. Replace burner orifice. 3. Contact local gas supplier.
Delayed ignition of burner.	1. Manifold pressure is too low. 2. Burner orifice is clogged.	1. Contact local gas supplier. 2. Clean burner (see *Care and Maintenance*, page 22) or replace burner orifice.
Burner backfiring during combustion.	1. Burner orifice is clogged or damaged. 2. Burner is damaged. 3. Gas regulator is damaged.	1. Clean burner orifice (see *Care and Maintenance*, page 22) or replace burner orifice. 2. Replace burner. 3. Replace gas regulator.
Yellow flame during burner combustion.	1. Not enough air. 2. Gas regulator is defective. 3. Inlet gas pressure is too low.	1. Check burner for dirt and debris. If found, clean burner (see *Care and Maintenance*, page 22). 2. Replace gas regulator. 3. Contact local gas supplier.
Gas odor during combustion.	1. Foreign matter between control valve and burner. 2. Gas leak. (See *Warning Statement* at top of page 23).	1. Contact a qualified service technician to remove foreign matter. 2. Locate and correct all leaks (see *Checking Gas Connections*, page 16).

TROUBLESHOOTING

Problem	Possible Cause	Corrective Action
Slight smoke or odor during initial operation.	1. Residues from manufacturing process.	1. Problem will stop after a few hours of operation.
Heater produces a whistling noise when burner is lit.	1. Turning control knob to high position when burner is cold. 2. Air in gas line. 3. Air passageways on heater are blocked. 4. Dirty or partially clogged burner orifice.	1. Turn control knob to low position and let warm up for a minute. 2. Operate burner until air is removed from line. Have gas line checked by local gas supplier. 3 Observe minimum installation clearances (Figure 4, page 10). 4 Clean burner (see *Care and Maintenance*, page 22) or replace burner orifice.
Heater produces a clicking/ticking noise just after burner is lit or shut off.	1. Metal is expanding while heating or contracting while cooling.	1. This is common with most heaters. If noise is excessive, contact qualified service technician.
White powder residue forming within burner box or on adjacent walls or furniture.	1. When heated, the vapors from furniture polish, wax, carpet cleaners, etc., turn into white powder residue.	1. Turn heater off when using furniture polish, wax, carpet cleaner or similar products.
Heater produces unwanted odors.	1. Heater is burning vapors from paint, hair spray, glues, etc. See *IMPORTANT* statement, page 23. 2. Gas leak. See *Warning Statement* at the top of page 23. 3 Low fuel supply.	1. Open a window to ventilate room. Stop using odor causing products while heater is running. 2. Locate and correct all leaks (see *Checking Gas Connections*, page 16). 3. Refill supply tank (Propane/LP models).
Heater shuts off in use (ODS operates).	1. Not enough fresh air is available. 2. Low line pressure. 3. ODS/pilot is partially clogged.	1. Open window and/or door for ventilation. 2. Contact local gas supplier. 3. Clean ODS/pilot (see *Care and Maintenance*, page 22).
Gas odor exists even when control knob is in OFF position.	1. Gas leak. See *Warning Statement* at top of page 23. 2. Control valve is defective.	1. Locate and correct all leaks (see *Checking Gas Connections*, page 16). 2. Contact customer service.
Moisture/condensation noticed on windows.	1. Not enough combustion/ventilation air.	1. Refer to *Air for Combustion and Ventilation* requirements, page 7.

PARTS

MODELS HVFM18N, HVFM18P, HVFM24N AND HVFM24P

This list contains replaceable parts used in your heater. When ordering parts, follow the instructions listed under *Replacement Parts* of this manual.

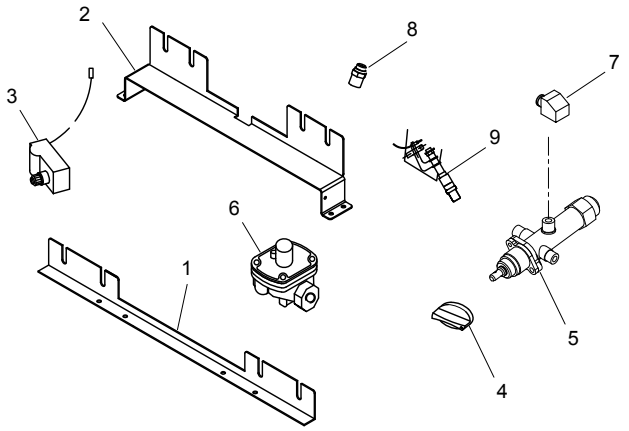

ITEM	HVFM18N	HVFM18P	HVFM24N	HVFM24P	DESCRIPTION	QTY
1	WYL005-01F	WYL005-01F	WYL005-01F	WYL005-01F	Front Log Bracket	1
2	WYL006-01D	WYL006-01D	WYL006-02D	WYL006-02D	Middle Log Bracket	1
3	PIMSC1-01	PIMSC1-01	PIMSC1-01	PIMSC1-01	Ignitor	1
4	DPL047-01	DPL047-01	DPL047-01	DPL047-01	Knob	2
5	2020-1223	2020-1217	2020-1223	2020-1217	Control Valve	1
6	NRV81FI-3	NRV82FB-8	NRV81FI-3	NRV82FB-8	Regulator	1
7	DPL027-01	DPL027-01	DPL027-01	DPL027-01	Joint	1
8	EWL024-01M	EWL024-02M	EWL024-01M	EWL024-02M	Orifice	1
9	ND1703X400	ND1908X400	ND1703X400	ND1908X400	ODS	1
	EWB601	EWB601	EWB601	EWB601	Hardware Package	1

REPLACEMENT PARTS

Note: Use only original replacement parts. This will protect your warranty coverage for parts replaced under warranty.

PARTS UNDER WARRANTY

Contact authorized dealers of this product. If they can't supply original replacement parts, call Customer Service at 1-618-233-7420 or 1-800-851-3153 for referral information.

When calling Customer Service or your dealer, have ready:

- Your name
- Your address
- Model and serial number of your heater
- How heater was malfunctioning
- Type of gas used (Propane/LP or Natural gas/NG)
- Purchase date

Usually, we will ask you to return the defective part to the factory

PARTS NOT UNDER WARRANTY

Contact authorized dealers of this product. If they can't supply original replacement part(s) call Customer Service at 1-618-233-7420 or 1-800-851-3153 for referral information.

When calling Customer Service have ready:

- Model number of your heater
- The replacement part number

PARTS

MODELS HVFR18N, HVFR18P, HVFR24N AND HVFR24P

This list contains replaceable parts used in your heater. When ordering parts, follow the instructions listed under *Replacement Parts* on page 26 of this manual.

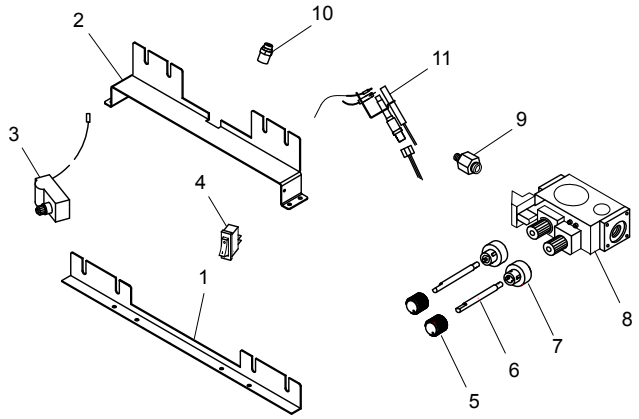

ITEM	HVFR18N	HVFR18P	HVFR24N	HVFR24P	DESCRIPTION	QTY
1	WYL005-01F	WYL005-01F	WYL005-01F	WYL005-01F	Front Log Bracket	1
2	WYL006-01D	WYL006-01D	WYL006-02D	WYL006-02D	Middle Log Bracket	1
3	PIMSC1-01	PIMSC1-01	PIMSC1-01	PIMSC1-01	Ignitor	1
4	VL067-01	VL067-01	VL067-01	VL067-01	Switch	1
5	MAL033-01	MAL033-01	MAL033-01	MAL033-01	Knob	2
6	WYL034-01	WYL034-01	WYL034-01	WYL034-01	Knob Rod	2
7	MAL033-03	MAL033-03	MAL033-03	MAL033-03	Knob Joint	2
8	0.820.637	0.820.636	0.820.637	0.820.636	Control Valve	1
9	MAL027	MAL027	MAL027	MAL027	Joint	1
10	VFL024-01A	VFL024-02A	VFL024-03A	VFL024-04A	Orifice	1
11	NG8214	LPG8404	NG8214	LPG8404	ODS	1
	EWB601	EWB601	EWB601	EWB601	Hardware Package	1

TECHNICAL SERVICES

You may have further questions about installation, operation, or troubleshooting. If so, call 1-618-233-7420 or 1-800-851-3153.

When calling, please have your model and serial numbers of your heater ready.

ACCESSORIES

Purchase heater accessories and parts from your nearest dealer or service center. If they can not supply an accessory or part call 1-618-233-7420 or 1-800-851-3153.

WARRANTY

KEEP THIS WARRANTY

Model _____

Serial No. _____

Date Purchased _____

Keep receipt for warranty verification.

LOG SET WARRANTY

Empire Comfort Systems Inc. warrants this hearth product to be free from defects at the time of manufacture and for the periods specified below. See owner's manual for warranty details.

HearthRite Vent Free Burners and Log Sets

All parts carry a 1 year limited warranty.

Remotes and Thermostats (Sold with Systems or as Accessories)

All parts carry a 1 year limited warranty.

Hearth products must be installed by a qualified technician and must be maintained and operated safely, in accordance with the instructions in the owner's manual.

Empire will make replacement parts available at the factory. Shipping, labor, and installation expenses are not covered. To make a claim under this warranty, please have your receipt available and contact your installing dealer.

The installing dealer is responsible for providing service and will contact the factory to initiate any warranted parts replacements. Unauthorized service or parts replacements will not be covered.

This warranty applies to the original purchaser only and is not transferable.

Empire Comfort Systems, Inc.
Belleville, Illinois
www.hearthrite.com
1-800-851-3153

200128-01
Rev. A
04/14