This Owner's Manual is provided and hosted by Appliance Factory Parts.

Appliance Factory Parts
Experts in BBQ, Humidifier, & Appliance Parts
1-800-955-7075

White Mountain Hearth DVCC32BP3P-3 Owner's Manual

Shop genuine replacement parts for White Mountain Hearth DVCC32BP3P-3

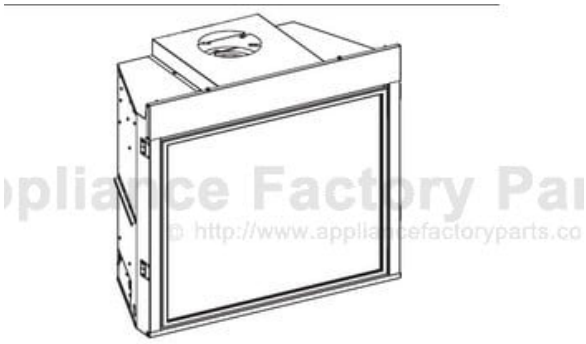

Find Your White Mountain Hearth Fireplace Parts - Select From 539 Models

-------- Manual continues below --------

EMPIRE
COMFORT SYSTEMS
SINCE 1932

INSTALLATION INSTRUCTIONS

INSTALLER:
Leave this manual with the appliance.

CONSUMER:
Retain this manual for future reference.

DIRECT VENT ZERO CLEARANCE GAS FIREPLACE HEATER SERIES

MILLIVOLT (MV)
DVCC(32,36,42)BP3(0,2)(N,P)-3

INTERMITTENT PILOT (IP)
DVCC(32,36,42)BP7(0,2)(N,P)-3

⚠ WARNING

FIRE OR EXPLOSION HAZARD
Failure to follow safety warnings exactly could result in serious injury, death or property damage.

- **Do not store or use gasoline or other flammable vapors and liquids in the vicinity of this or any other appliance.**
- **WHAT TO DO IF YOU SMELL GAS**
  - **Do not try to light any appliance.**
  - **Do not touch any electrical switch; do not use any phone in your building.**
  - **Leave the building immediately.**
  - **Immediately call your gas supplier from a neighbor's phone. Follow the gas supplier's instructions.**
  - **If you cannot reach your gas supplier, call the fire department.**
- **Installation and service must be performed by a qualified installer, service agency or the gas supplier.**

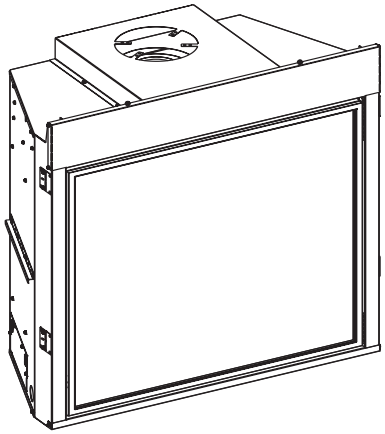

This appliance may be installed in an aftermarket, permanently located, manufactured home (USA only) or mobile home, where not prohibited by state or local codes.

This appliance is only for use with the type of gas indicated on the rating plate. This appliance is not convertible for use with other gases, unless a certified kit is used.

⚠ WARNING

HOT GLASS WILL CAUSE BURNS.
DO NOT TOUCH GLASS UNTIL COOLED.
NEVER ALLOW CHILDREN TO TOUCH GLASS.

A barrier designed to reduce the risk of burns from the hot viewing glass is provided with this appliance and shall be installed for the protection of children and other at-risk individuals.

NATIONAL FIREPLACE INSTITUTE
NFI
CERTIFIED
www.nficertified.org

We suggest that our gas hearth products be installed and serviced by professionals who are certified in the U.S. by the National Fireplace Institute® (NFI) as NFI Gas Specialists.

GAS-FIRED
C UL US
LISTED

UL FILE NO. MH30033

This fireplace is design certified in accordance with American National Standard/CSA Standard ANSI Z21.88/CSA 2.33 and by Underwriters Laboratories as a Direct Vent Gas Fireplace Heater and shall be installed according to these instructions.

TABLE OF CONTENTS

SECTION	PAGE
ATTENTION INSTALLER	3
BEFORE YOU START	4-5
CARTON CONTENTS	6
INTRODUCTION	7
HOMEOWNER REFERENCE INFORMATION	7
SPECIFICATIONS	8
ACCESSORIES	9
FIREPLACE DIMENSIONS	10
FBB10 BLOWER KIT INSTALLATION (OPTIONAL)	11-13
CLEARANCES	14
TERMINATION CLEARANCES	15
VENT TERMINAL CLEARANCES	16
GAS SUPPLY	17
SAFETY INFORMATION FOR USERS OF LP GAS	18
LOCATING FIREPLACE	19
JUNCTION BOX WIRING INSTALLATION INSTRUCTIONS	19
MILLIVOLT STANDING PILOT WIRING DIAGRAM	20
IPI ELECTRONIC SYSTEM WIRING DIAGRAM	21
INSTALLATION	22-25
VENT FRAMING	26-27
VENT SYSTEM IDENTIFICATION	28
SPECIAL VENT SYSTEMS	28
VENTING FIREPLACE - TOP	29-32
EXAMPLES - TOP VENT RUN	33
HORIZONTAL TERMINATION	34
VERTICAL TERMINATION	35-36
DVVK-4F FLEX VENT INSTRUCTIONS	37-38
MILLIVOLT STANDING PILOT LIGHTING INSTRUCTIONS	39
MILLIVOLT OPERATING INSTRUCTIONS	40
MILLIVOLT STANDING PILOT TROUBLESHOOTING	41
INTERMITTENT PILOT LIGHTING INSTRUCTIONS	42
IPI ELECTRONIC SYSTEM OPERATING INSTRUCTIONS	43
INTERMITTENT PILOT CONTROL SYSTEM TROUBLESHOOTING	44-45
MILLIVOLT PARTS VIEW - DVCP(32,36,42)BP3	46
MILLIVOLT PARTS LIST - DVCP(32,36,42)BP3	47
IP PARTS VIEW - DVCP(32,36,42)BP7	48
IP PARTS LIST - DVCP(32,36,42)BP7	49
MAINTENANCE AND SERVICE	50-51
IMPORTANT SAFETY INFORMATION - INSTALLER	52
REQUIREMENTS FOR MASSACHUSETTS	53
ANNUAL FIREPLACE INSPECTION CHECKLIST	54
MASTER PARTS DISTRIBUTOR LIST	55
HOW TO ORDER REPAIR PARTS	55
WARRANTY	56

ATTENTION INSTALLER:

Fireplace Installation Checklist

Use this checklist in conjunction with the instructions in this manual.

Customer: _____ **Date Installed:** _____

Lot/Address: _____ **Fireplace Location:** _____

_____ **Installer:** _____

Model: _____ **Dealer Phone #:** _____

Serial # _____

		COMMENTS
FIREPLACE INSTALLATION		
Verified clearances to combustibles (pg. 14)	☐	_____
Fireplace is leveled and secured	☐	_____
VENTING/CHIMNEY/PowerFlow™ HEAT DISTRIBUTION		
Venting configuration complies to vent diagrams (pg. 29)	☐	_____
Venting installed, locked, secured in place with correct clearance	☐	_____
Firestops installed	☐	_____
Exterior wall/roof flashing installed and sealed	☐	_____
Terminations installed and sealed (pgs. 34-36)	☐	_____
Light unit and test venting before enclosing the fireplace	☐	_____
ELECTRICAL (pgs. 19-21)		
Unswitched power (110-120 VAC) provided to the fireplace	☐	_____
GAS (pgs. 17-18)		
Proper appliance for fuel type	☐	_____
Was a conversion performed?	☐	**Yes** ☐ **No**
Leak check performed and inlet pressure verified	☐	_____
FINISHING (pgs. 23-24)		
Non-combustable board installed as required	☐	_____
Verified all clearances meet installation manual requirements	☐	_____
Mantels and wall projections meet requirements	☐	_____
Granite or Clean Face finishing complies with clearance requirements screen	☐	_____
Barrier for glass front properly installed	☐	_____
FIREPLACE SETUP		
All packaging and protective materials removed (inside & outside of fireplace)	☐	_____
Media installed correctly	☐	_____
Firebox glass door cleaned, installed, and secured	☐	_____
Accessories installed properly	☐	_____
Started Fireplace and verified no gas leaks exist	☐	_____
Manual envelope and all of its contents removed from inside/outside the fireplace and given to party responsible for use and operation	☐	_____
Provide homeowner with “Scratch & Sniff” odor card	☐	_____

Empire recommends the following:

- Keep this checklist visible on the fireplace until the installation is complete.
- Photograph the installation and copy this completed checklist for your file.

Comments: Further description of the issues, who is responsible (Installer/Builder/Other, etc) and corrective action needed:

_____

Comments communicated to party responsible _____by_____ on _____

BEFORE YOU START

Sample Warnings and Definitions:

⚠ DANGER
Indicates a hazardous situation which, if not avoided, will result in death or serious injury.

⚠ WARNING
Indicates a hazardous situation which, if not avoided, could result in death or serious injury.

⚠ CAUTION
Indicates a hazardous situation which, if not avoided, could result in minor or moderate injury.

NOTICE: Addresses practices not related to personal injury.

Read all instructions before starting installation and follow them carefully to ensure safety. Failure to follow the instructions will void the warranty and may cause a fire hazard.

The warranty will be voided by, and the warranter disclaims any responsibility for the following actions:

- Installation by anyone other than the dealer or his agent.
- Installation of any damaged fireplace or component.
- Modification of the fireplace or direct vent system.
- Installation other than as instructed by Empire Comfort Systems.
- Improper positioning of logs, glass door, or accessories.
- Installation and/or use of any component part not manufactured or approved by Empire Comfort Systems.

All correspondence should refer to complete Model Number, Serial Number and type of gas. Fill out the Homeowner Reference Section. **(See Page 3).**

Unpacking The Fireplace

1. Cut away shrink-wrap material around the unit. Retain instruction manual and instruction sheets.
2. Remove non-combustible board from the rear of the fireplace, and place in a safe location. It will be needed for installation.
3. Get help to lift fireplace.

Television Considerations

Installing a television above a fireplace has become increasingly popular; however, the area above any fireplace gets hot and most TV manufacturers recommend against placing their products near a heat source.

If you install a television above this fireplace, Empire Comfort Systems accepts no responsibility for damage or injuries. Follow the television manufacturer's installation instructions, including any recommendations regarding proximity to heat sources.

If you have a TV above your fireplace, turn off the fireplace and let it cool completely before servicing or touching any buttons on the TV.

BEFORE YOU START (CONTINUED)

Preparation

This fireplace and its components are safe when installed in accordance with this Manual. Report any parts damaged in shipment to your dealer. Do not install the fireplace with damaged, incomplete or substitute parts.

Installation Considerations

- Gas supply piping – right or left side entrance
- Electrical supply and connections 120V, 60Hz, 1 Amp, right side entrance
- Allowable fireplace mounting surfaces:
  1. A flat, hard, combustible or non-combustible surface
  2. A raised platform of combustible or non-combustible material.
  3. The four corners of the fireplace onto non-combustible material so that contact is made on all four perimeter edges on the bottom of the fireplace – such as on cinder blocks (where allowed by local codes).
- If the fireplace is installed directly on carpeting, tile or other combustible material other than wood flooring, it should be installed on a metal or wood panel extending the full width and depth of the fireplace.
- This fireplace is designed to be installed in a zero-clearance enclosure. Combustible material can come in contact with the side standoff spacers, and the fireplace can be secured to combustible framing with the framing brackets provided with the fireplace.

Planning the installation

First determine where the fireplace will be located and what accessories will be installed.

Your location must allow for:

- Venting – either vertical or horizontal. Choose a vent configuration, **(See Pages 34-36)** and make sure the required access through attics and walls is not blocked by other utilities such as water lines, sewer vents, gas lines, etc. If access is blocked, you will need to move the utilities or relocate the fireplace.
- Gas supply piping (right or left side of entrance) – see pipe size and specs on **(Page 17)**.
- Electrical supply requirements (120V, 60Hz, 1 Amp) (right side entrance)
- Proper framing required for installation of the fireplace. See framing dimensions on **(Page 22)**.
- Finishing the fireplace – drywall thickness, tile or stone thickness, and the desired decorative accessories can affect how you frame the opening and how you attach the nailing flanges to set the proper depth. **(See Pages 23 and 24)** for finishing details, before you begin.

Accessories

Most accessories install much more easily before fitting the fireplace to the opening.

For example, it takes just 10-15 minutes to install the blower side before it's framed in. Once the fireplace is framed in, it takes up to an hour.

CARTON CONTENTS

NOTICE: Items not shown to scale.

INDEX NUMBER	DESCRIPTION	QUANTITY SUPPLIED	
		DVCC(32,36,42)BP3 SERIES	DVCC(32,36,42)BP7 SERIES
1	Rock Wool	1	1
2	Receptacle Cover	1	2
3	Receptacle	1	2
4	Flue Restrictor Assembly - **(See Page 30)**	1	1
5	10 X 1/2 Phillips Screw	12	12
6	#8 X 1 Self-Drilling Drywall Screw	8	8
7	AA Battery	0	4
8	AC Adaptor	0	1
9	Backer Stud	4	4
10	Burner Cover	1	1

See Parts Lists on pages 48 - 51 for ordering replacement parts. Do not order batteries, bolts, screws, washers or nuts. They are standard hardware items and can be purchased at any local hardware store.

INTRODUCTION

The information in this manual pertains to all models and gas control systems unless otherwise noted.

Instructions to Installer

1. Leave this manual with homeowner.
2. Have the homeowner complete the product registration card or register online at www.empirecomfort.com
3. Show the homeowner how to start and operate the fireplace.

Notes to Installer

- This direct-vent fireplace is designed to:
  - Operate with combustion air drawn from outside of the building.
  - Expel all exhaust gases to the outside of the building.
- The installation must conform with local codes or, in the absence of local codes, with the National Fuel Gas Code ANSI Z223.1/NFPA 54* Natural Gas and Propane Installation Code, or CSA B149.1 in Canada. * Available from the American National Standards Institute, Inc. 11 West 42nd St., New York, N.Y. 10036
- Any alteration of the original design, installation other than as shown in these instructions, or use with a type of gas not shown on the rating plate is the responsibility of the person and company making the change.
- This fireplace is not for use with solid fuels.
- These fireplace models may be installed in a bedroom or bed-sitting room in the U.S.A. and Canada.

⚠ WARNING

Any change to this fireplace can be dangerous. Improper installation or use can cause serious injury or death from fire, burns, explosion or carbon monoxide poisoning.

Fireplace Certification

This fireplace is design certified in accordance with American National Standard/CSA Standard ANSI Z21.88/CSA 2.33 and by Underwriters Laboratories as a Direct Vent Gas Fireplace Heater and shall be installed according to these instructions.
Consult your local building code agency, prior to installation, to ensure compliance with local codes-including permits and inspections.
The fireplace, when installed, must be electrically grounded in accordance with local codes or, in absence of local codes, with the National Electric Code ANSI/NFPA 70 or Canadian Electric code, CSA C22.1, if an external electrical source is utilized.

Qualified Installing Agency

Installation and replacement of gas piping, gas utilization equipment or accessories and repair and servicing of equipment shall be performed only by a qualified agency. The term “qualified agency” means any individual, firm, corporation or company which either in person or through a representative is engaged in and is responsible for (a) the installation or replacement of gas piping or (b) the connection, installation, repair or servicing of equipment, who is experienced in such work, familiar with all precautions required and has complied with all the requirements of the authority having jurisdiction.

Commonwealth of Massachusetts: The installation must be made by a licensed plumber or gas fitter in the Commonwealth of Massachusetts. Requirements on Page 53.

High Altitude (USA)

When installing this fireplace at an elevation above 2000 feet (in the United States) it may be necessary to decrease the input rating by changing the existing burner orifice to a smaller size. Generally, input should be reduced 4 percent for each 1000 feet above sea level.

High Altitude (CANADA)

Altitude: 0-4500 feet (0-1370 meters)
When installing this fireplace at an elevation above 4500 feet (in Canada), check with local authorities.
Consult your local gas utility for assistance in determining the proper orifice for your location.

SPECIFICATIONS

	DVCC32NAT	DVCC32LP	DVCC36NAT	DVCC36LP	DVCC42NAT	DVCC42LP
Input BTU/Hr Maximum	24,000	22,000	24,000	24,000	26,500	26,500
Input BTU/Hr Minimum (millivolt only)	18,000	18,000	18,000	19,000	18,000	22,000
KWH (Maximum)	7.03	6.45	7.03	7.03	8.35	7.77
KWH (Minimum)	5.27	5.27	5.28	5.57	6.15	6.3
Orifice	42	54	42	1.45mm	2.45mm	1.55mm
Air Shutter Opening	1/4-in	Full Open	1/4-in	Full Open	1/8-in	Full Open
Gas Inlet Shutoff Valve (Pipe)	1/2 NPT	1/2 NPT	1/2 NPT	1/2 NPT	1/2 NPT	1/2 NPT

NOTICE: Air shutter settings are factory minimum settings. Some venting configurations may require minor air shutter adjustments for optimum performance.

GAS SUPPLY PRESSURES			
Gas Type	**Maximum**	**Minimum**	**Manifold**
NAT	14.0-in	4.5-in	3.5-in
LP	14.0-in	10.8-in	10.0-in

Remote Control Options And Accessories	Description	Models Used On
FRBC	Millivolt Battery Remote ON/OFF	ALL
FRBTC	Millivolt Battery Remote Thermostat	ALL
TMW	Millivolt Wireless Wall Thermostat	ALL
TRW	Millivolt Reed Switch Wall Thermostat	ALL
FWS-1	Direct Ignition/Millivolt Wall Switch	ALL
FRBTP	Battery Operated Remote Control with Programmable Thermostat	ALL
RVKN-1	Remote Kit, NAT (Stepper Motor)	DVCC(32,36,42)BP7N
RVKP-1	Remote Kit, LP (Stepper Motor)	DVCC(32,36,42)BP7P

Venting Options	Description
DVVK-4TSP	Top vent kit (horizontal) - 4-½-in to 6-in (114.3mm to 152mm) wall thickness
DVVK-4TP	Top vent kit (horizontal) - 8-in to 12-in (203mm to 305mm) wall thickness
DVVK-4VP	Vertical vent kit
DVVK-4F	Horizontal flex vent kit (4-ft FLEX)
SD46DVA-FCFX7	Flex Adaptor Collar (must be used with flex kits)

Conversion Kits	Description	Models Used On
31768	Conversion Kit, DV (Natural to Propane)	DVCC32BP(30,32)
31769	Conversion Kit, DV (Propane to Natural)	DVCC32BP(30,32)
31770	Conversion Kit, DV (Natural to Propane)	DVCC36BP(30,32)
31771	Conversion Kit, DV (Propane to Natural)	DVCC36BP(30,32)
31772	Conversion Kit, DV (Natural to Propane)	DVCC42BP(30,32)
31773	Conversion Kit, DV (Propane to Natural)	DVCC42BP(30,32)
32874	Conversion Kit, DV (Natural to Propane)	DVCC32BP(70,72)
32875	Conversion Kit, DV (Propane to Natural)	DVCC32BP(70,72)
32876	Conversion Kit, DV (Natural to Propane)	DVCC36BP(70,72)
32877	Conversion Kit, DV (Propane to Natural)	DVCC36BP(70,72)
32878	Conversion Kit, DV (Natural to Propane)	DVCC42BP(70,72)
37560	Conversion Kit, DV (Propane to Natural)	DVCC42BP(70,72)

ACCESSORIES

The following accessory parts can be obtained from your Empire Comfort Systems dealer. If you need additional information beyond what your dealer can furnish, contact Empire Comfort Systems Inc., 918 Freeburg Ave., Belleville, Illinois 62220-2623.

OPTIONAL		
Model Number	**Description**	**Models Used On**
FBB10	Blower, Auto Variable-Speed	ALL
LK6	Lighting Kit, 120 V	ALL

REQUIRED		
Model Number	**Description**	**Models Used On**
DG1BKP	Decorative Glass, Crushed, Black	ALL
DG1BUC	Decorative Glass, Crushed, Blue	ALL
DG1CLF	Decorative Glass, Crushed, Clear	ALL

REQUIRED
This unit requires Ceramic Fiber Logs to complete the fireplace interior. Contact your Empire Comfort Systems Dealer **(See Page 55)** for further information. Do not operate the fireplace without the Ceramic Fiber Logs installed.

FIREPLACE DIMENSIONS

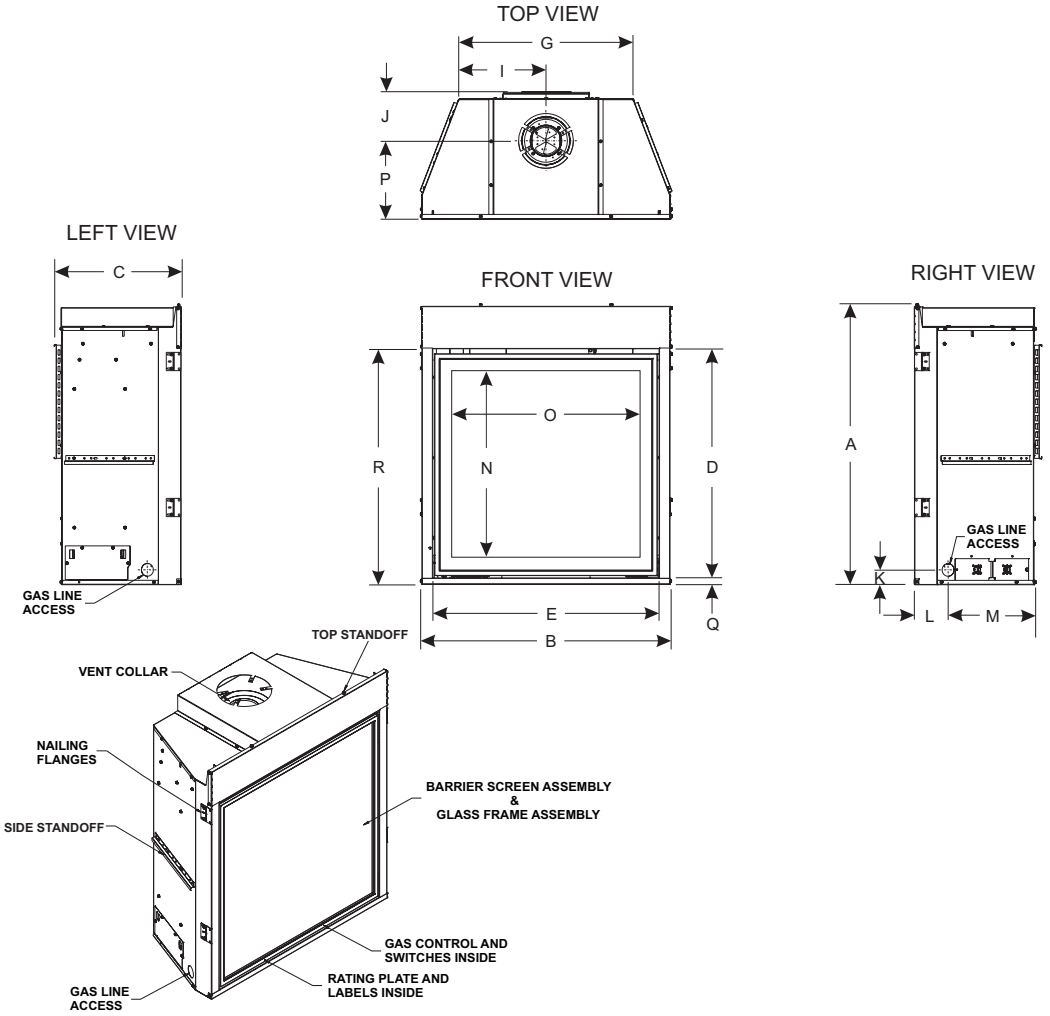

INDEX LETTER	DIMENSION DESCRIPTION	DVCC32	DVCC36	DVCC42
		(Inches)		
A	The maximum height of fireplace face (excluding standoffs)	38-1/4	38-1/4	40-1/4
B	The maximum width of the fireplace face (excluding nailing flanges)	34-7/16	37-7/16	43-7/16
C	The maximum depth of the fireplace	17-1/2	17-1/2	17-1/2
D	The height of the fireplace opening	31-3/8	31-3/8	33-3/8
E	The width of the fireplace opening	31	34	40
F	The interior depth of the fireplace (not shown)	11-1/2	11-1/2	11-1/2
G	The rear exterior width of the fireplace	23-15/16	26-15/16	32-15/16
I	Width from the left side of the fireplace to the centerline of vent	12	13-1/2	16-1/2
J	Depth from back of fireplace to centerline of top vent	6-3/4	6-3/4	6-3/4
K	Height from the bottom of the fireplace to the left gas line opening	2	2	2
L	Depth from the front of the fireplace to the left gas line opening	4-5/8	4-5/8	4-5/8
M	Depth from rear of fireplace to gas line opening	12-5/16	12-5/16	12-5/16
N	Viewing area height	24-7/8	24-7/8	26-3/8
O	Viewing area width	27-1/2	30-1/2	36-1/2
P	Depth from front of fireplace to centerline of vent	10-3/4	10-3/4	10-3/4
Q	Distance from floor to bottom fireplace opening	7/8	7/8	7/8
R	Distance from floor to top fireplace opening	32-1/4	32-1/4	34-1/4

FBB10 BLOWER KIT INSTALLATION (OPTIONAL)

BEFORE FIREPLACE IS INSTALLED IN WALL

1. With power completely turned off, remove plate and four screws from left panel. **See Figure 1.**

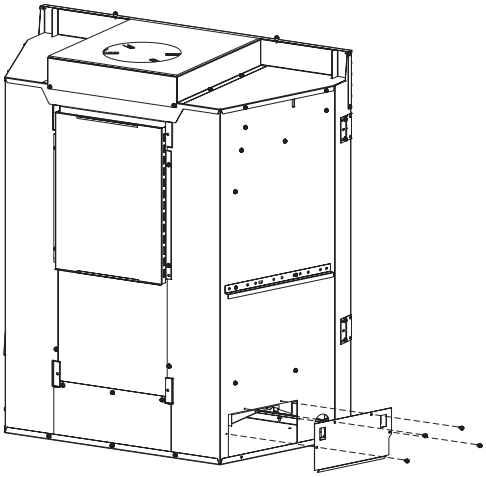

Figure 1

2. Install the blower onto the pre-bent brackets on the blower plate. Ensure the Velcro connects to secure the blower in place. **See Figure 2.**

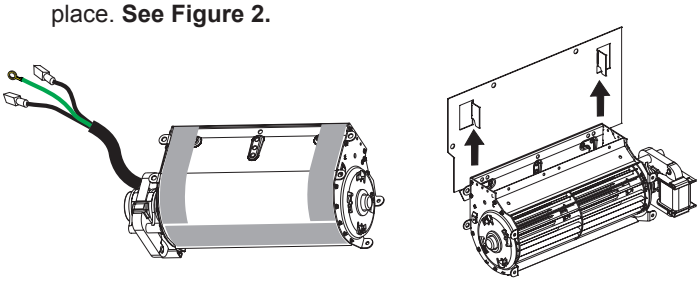

Back side of Blower showing Velcro

Figure 2

3. Route wiring through opening created in Step 1.
4. Secure blower assembly into place per step 2 with velcro.
5. Install thermo disc by snapping into valve bracket burner assembly. **See Figure 3.**

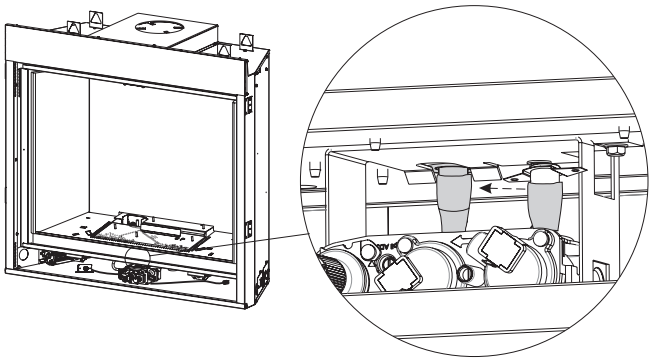

Figure 3

6. Connect Power source into outlet on the bottom right side of the fireplace.

AFTER FIREPLACE IS INSTALLED IN WALL

NOTICE: Do not handle barrier screen or door assembly with your bare hands! (Always Wear Gloves)

1. Turn off power and gas. Lift barrier screen and pull away from the unit. **See Figure 4.**

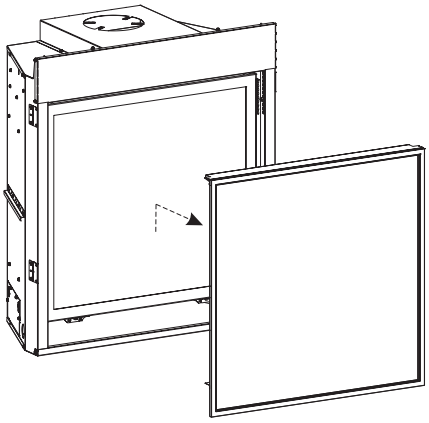

Figure 4

2. Pull out to release both latches at bottom of firebox assembly. **See Figure 5.**

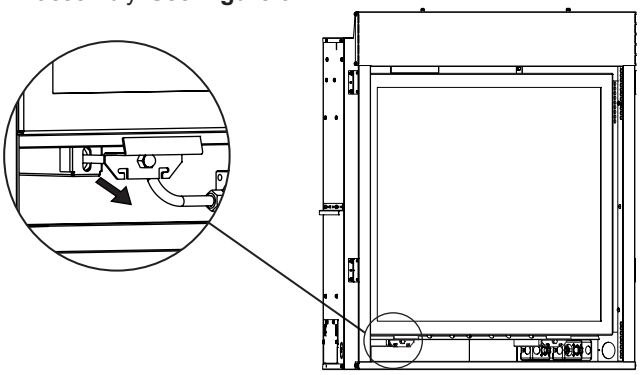

Figure 5

3. Disengage Glass Frame by pulling outward in a swinging motion. Place Glass Frame aside in a safe out-of-the-way location. **See Figure 6.**

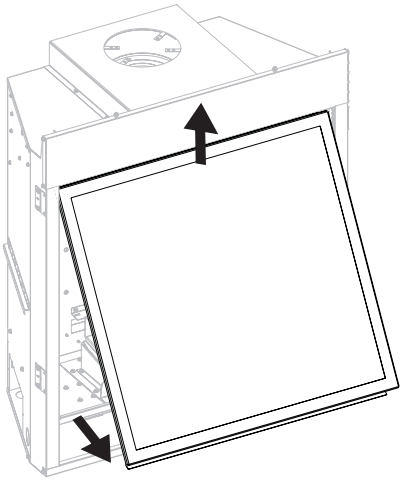

Figure 6

FBB10 BLOWER KIT INSTALLATION (OPTIONAL) (CONT'D)

4. Remove the modern cover by lifting off. **See Figure 7. (At installation modern cover is behind valve)**

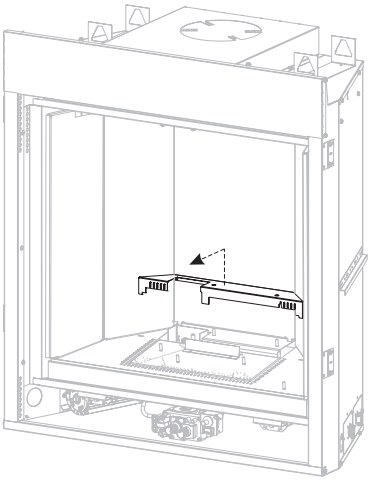

Figure 7

5. Remove the two screws securing the liner brackets to the firebox as shown in Figure 8. **(If liner is installed)**

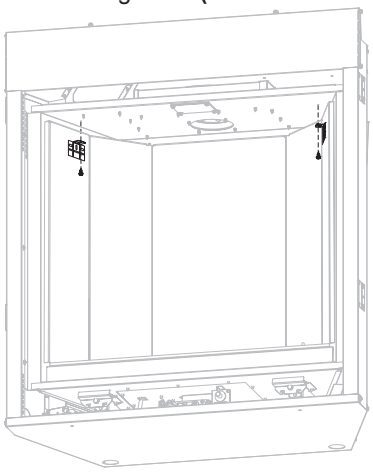

Figure 8

6. Remove liners as shown in Figure 9. **(If installed)**

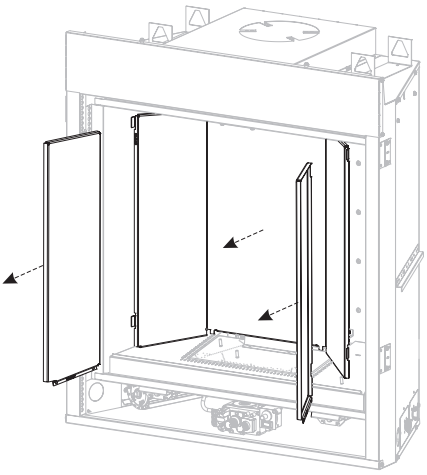

Figure 9

7. Remove burner cover by lifting off. **See Figure 10.**

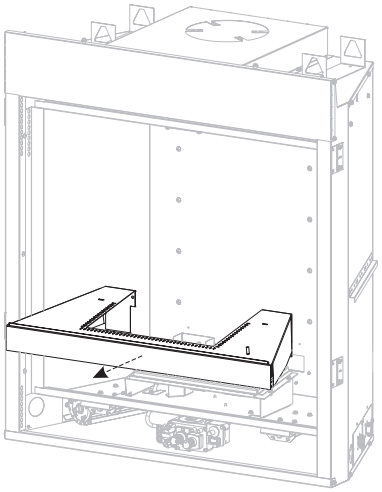

Figure 10

8. Remove log support by unscrewing two screws securing the metal plate to the log support. Retain log support and screws for reassembly. **See Figure 11.**

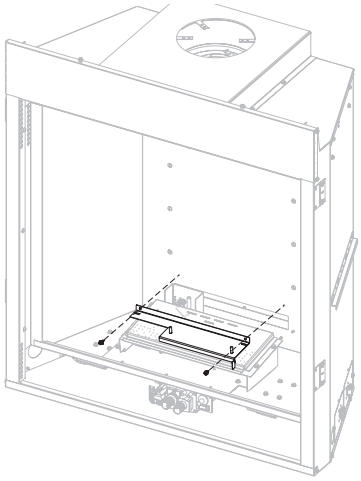

Figure 11

9. Remove the four screws securing burner and slide to right then lift burner off. **See Figure 12.**

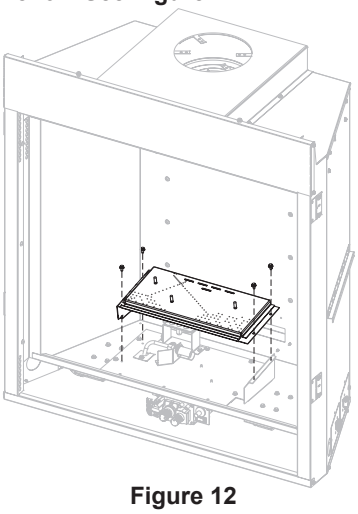

Figure 12

FBB10 BLOWER KIT INSTALLATION (OPTIONAL) (CONT'D)

10. Remove ten screws and lift burner assembly. Disconnect the gas line. **See Figure 13.**

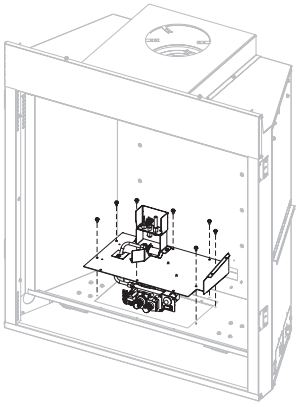

Figure 13

11. Remove the four #10 x 1/2 screws securing the left latch assembly to the underside of the firebox and set aside. **See Figure 14.**

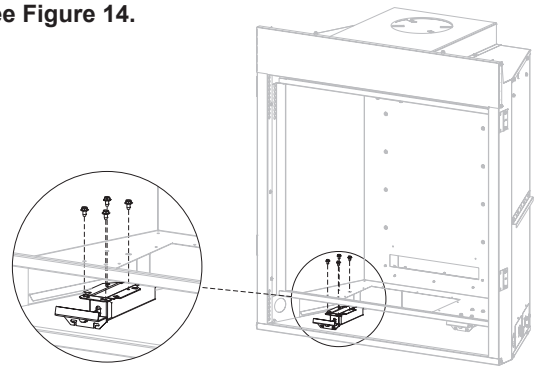

Figure 14

12. Install blower through firebox cutout. **See Figure 15.**

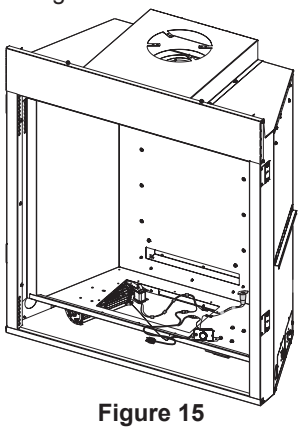

Figure 15

13. Install the blower onto the prebent brackets on the blower plate. Ensure the Velcro connects to secure the blower in place. **See Figure 16.**

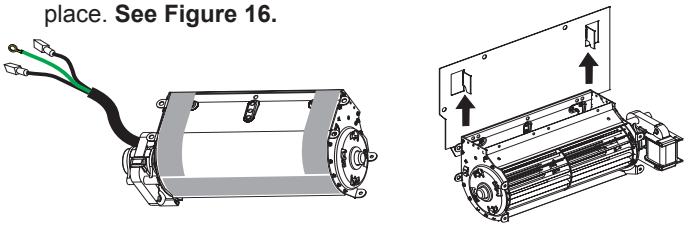

Back side of Blower showing Velcro

Figure 16

14. Reinstall the left latch assembly removed in step 11. **See Figure 14.**
15. Install thermo disc by snapping into valve bracket burner assembly. **See Figure 17.**

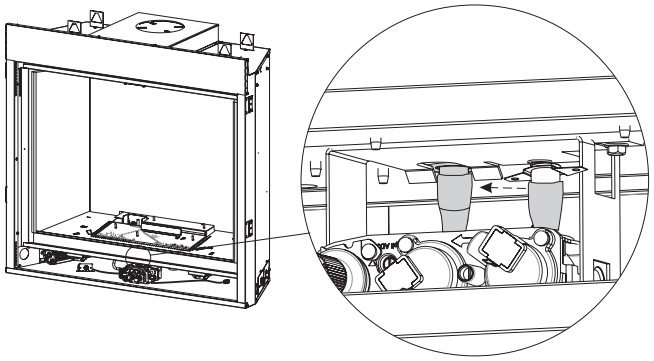

Figure 17

16. Reconnect gas line and turn gas on. Check for leaks.
17. Reinstall the burner assembly and ten screws removed in step 10. **See Figure 13.**
18. Reinstall the burner and four screws removed in step 9. **See Figure 12.**
19. Reinstall the log support and secure it with metal plate and two screws removed in step 8. **See Figure 11.**
20. Replace burner cover removed in step 7. **See Figure 10.**
21. Replace liner and bracket if removed in steps 5 and 6. **See Figures 8 & 9.**
22. Replace modern cover removed in step 4. **See Figure 7.**
23. Replace decorative media.
24. Turn on power.
25. Reinstall the glass frame removed in steps 2 and 3. **See Figures 5 & 6.**
26. Replace barrier screen removed in step 1. **See Figure 4.**

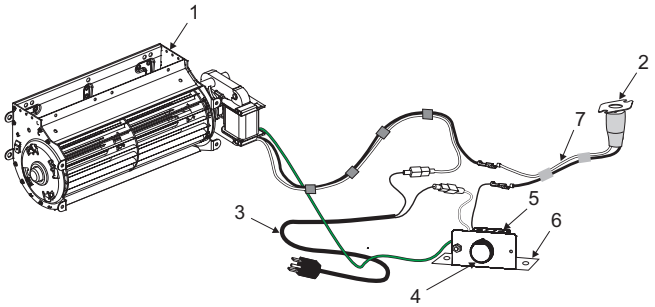

BLOWER ASSEMBLY PARTS LIST			
INDEX NO.	PART NO	DESCRIPTION	QTY
1	R2804	BLOWER ASSEMBLY	1
2	R7649	FAN, CONTROL L120-20	1
3	R2099	CORD SET, 30 INCHES	1
4	R4192	RHEOSTAT, KNOB	1
5	R4186	RHEOSTAT, 3.0 AMP 115 VAC	1
6	10088	RHEOSTAT BOX BRACKET	1
7	R11768	WIRE HARNESS, FAN CONTROL	1

Figure 18

CLEARANCES

CLEARANCE TO COMBUSTIBLES	
(Inches)	
Back	0
Side	0
Floor	0
Top Framing Edge	See Below

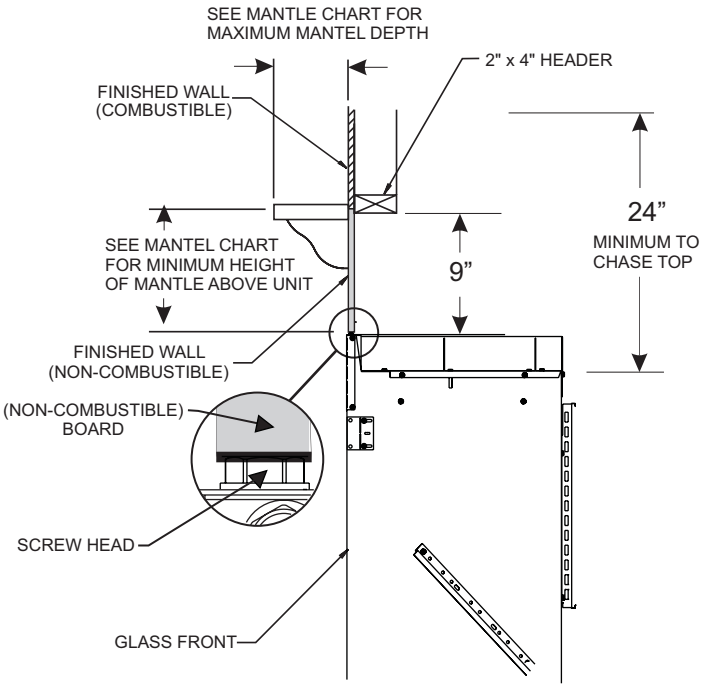

Figure 19

Combustible Material

No greeting cards, stockings or ornamentation of any type should be placed on or attached to the fireplace. The flow of heat can ignite combustibles.

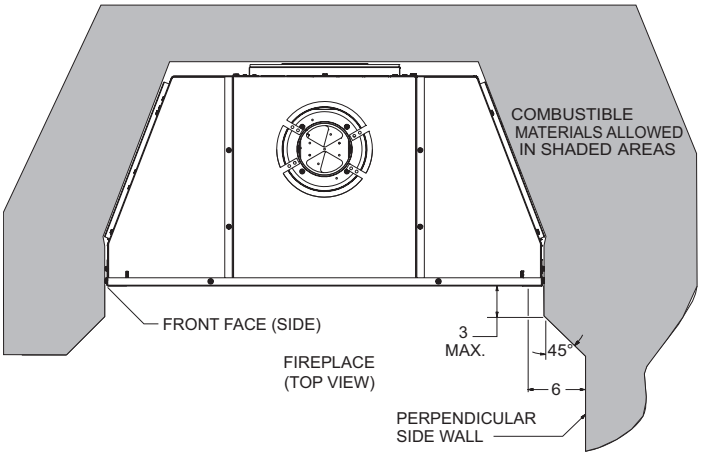

Figure 20

Mantel Chart

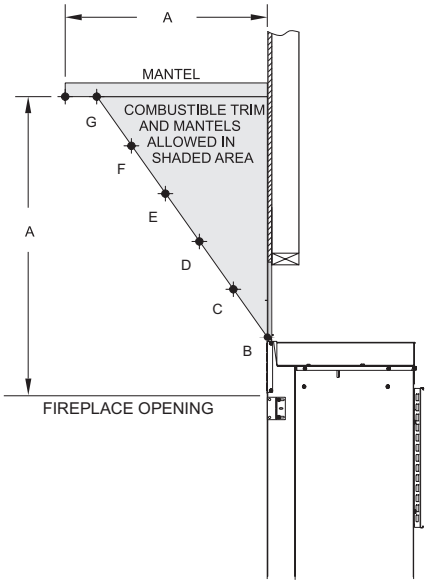

INDEX LETTER	DISTANCE FROM TOP EDGE OF FIREPLACE (VERTICAL)	DISTANCE FROM FIREPLACE FRONT (HORIZONTAL)
	(Inches)	
A	18	12
B	6	0
C	9	2-1/4
D	11	3-3/4
E	14	6
F	16-3/4	8
G	18	10

Figure 21

Clearances

Clearance from bottom edge of fireplace to ceiling is 72-inches. Clearance from side of fireplace to adjacent sidewall is 6-inches. Refer to framing dimensions on page 22.

NOTICE: 72 inch minimum applies when unit is installed in wall above floor level.

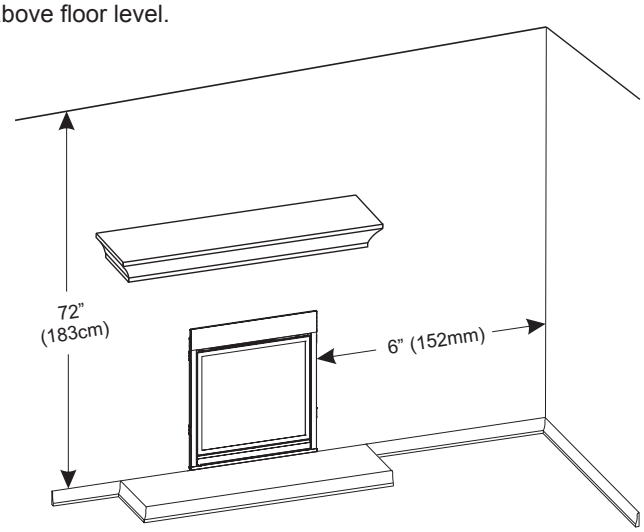

Figure 22

TERMINATION CLEARANCES

Termination clearance for buildings with combustible and noncombustible exteriors.

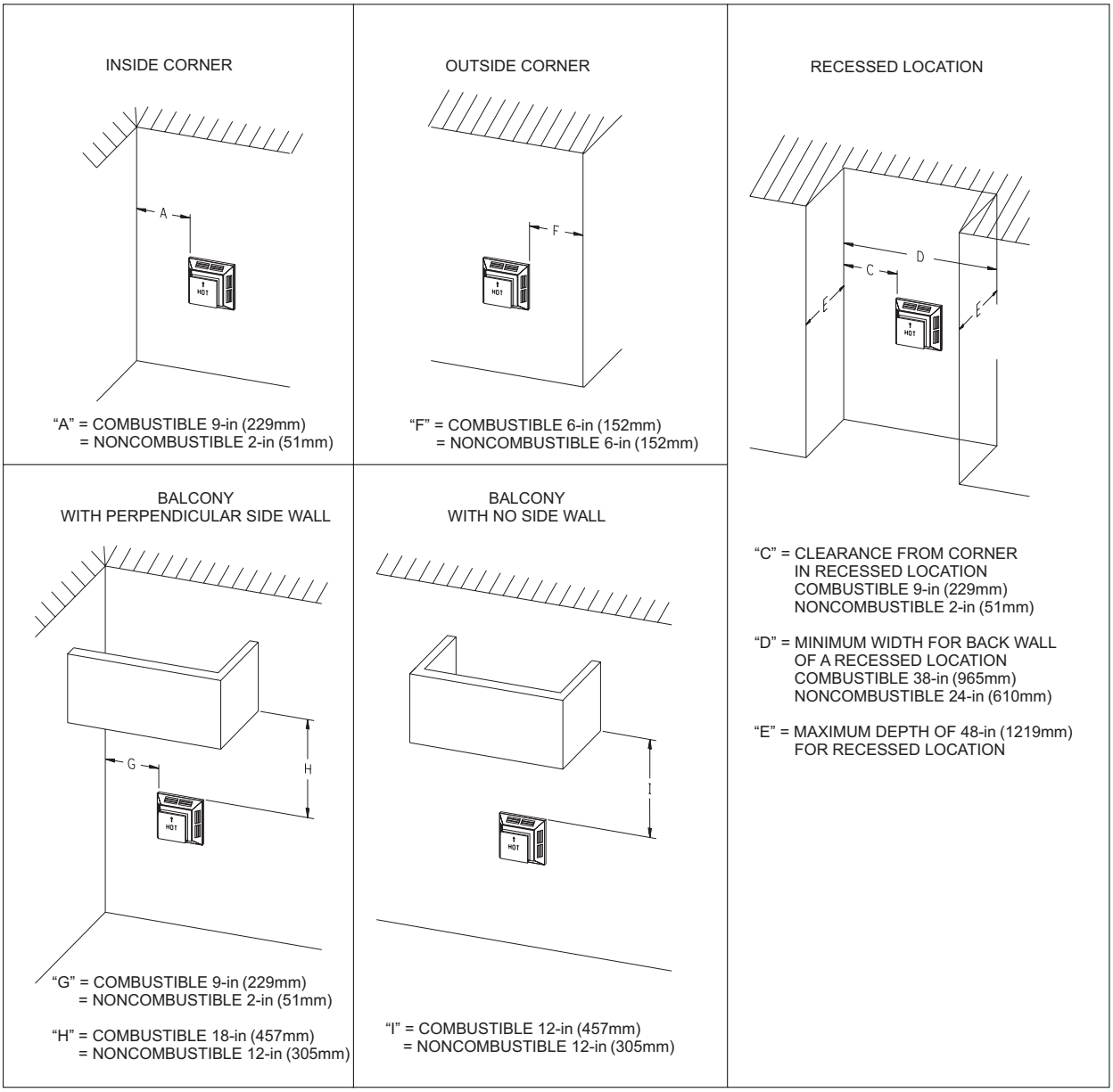

Figure 23

Vertical Sidewall Installations

Important! Minimum clearance between vent pipes and combustible materials is 3 inches (76 millimeter) on top, and 2 inches (25 millimeter) on bottom and sides.

Important! When vent termination exits through foundation less than 20 inches (508 millimeter) below siding outcrop, the vent pipe must extend outward so that the horizontal vent termination is located flush to, or beyond the outcrop siding.

Information on Various Venting Routes and Components

Important: Locate the fireplace in such a way that minimizes the number of offsets and horizontal vent length.

Venting system must maintain a balance between the combustion air intake and the flue gas exhaust. Limitations to vent configurations apply.

ATTENTION: Vinyl Soffit, Vinyl Ceiling, Vinyl Overhang Disclaimer

Clearances are to heat resistant material (i.e. wood, metal). This does not include vinyl. Empire Comfort Systems Inc. will not be held responsible for heat damage caused from terminating under vinyl overhangs, vinyl ceilings or vinyl ventilated/unventilated soffits.

VENT TERMINAL CLEARANCES

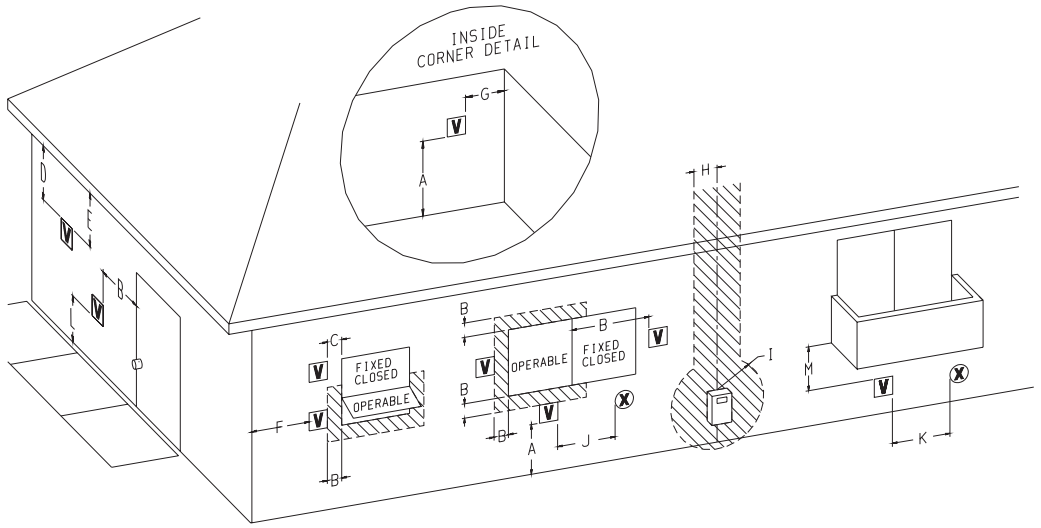

V VENT TERMINAL X AIR SUPPLY INLET AREA WHERE TERMINAL IS NOT PERMITTED

	Canadian Installations1	US Installations2
A= Clearance above grade, veranda, porch, deck, or balcony	12-in (30cm)	12-in (30cm)
B= Clearance to window or door that may be open	6-in (15cm) for appliances ≤ 10,000 Btuh (3kW), 12-in (30cm) for appliances > 10,000 Btuh (3kW) and ≤ 100,000 Btuh (30kW), 36-in (91cm) for appliances > 100,000 Btuh (30kW)	6-in (15cm) for appliances ≤ 10,000 Btuh (3kW), 9-in (23cm) for appliances > 10,000 Btuh (3kW) and ≤ 50,000 Btuh (15kW), 12-in (30cm) for appliances > 50,000 Btuh (15kW)
C= Clearance to permanently closed window	12-in (30cm)	12-in (30cm)
D= Vertical clearance ventilated soffit located above the terminal within a horizontal distance of 2 feet (61 cm) from the center line of the terminal	24-in (61cm)	24-in (61cm)
E= Clearance to unventilated soffit	12-in (30cm)	12-in (30cm)
F= Clearance to outside corner	6-in (15cm)	6-in (15cm)
G= Clearance inside corner	9-in (23cm)	9-in (23cm)
H= Clearance to each side of center line extended above meter/regulator assembly	3ft (91cm) within a height 15ft (4.5m) above the meter/regulator assembly	3ft (91cm)

ATTENTION: Vinyl Soffit, Vinyl Ceiling, Vinyl Overhang Disclaimer
Clearances are to heat resistant material (i.e. wood, metal). This does not include vinyl. Empire Comfort Systems Inc. will not be held responsible for heat damage caused from terminating under vinyl overhangs, vinyl ceilings or vinyl ventilated/unventilated soffits.

	Canadian Installations1	US Installations2
I= Clearance to service regulator vent outlet	3ft (91cm)	6ft
J= Clearance to nonmechanical air supply inlet to building or the combustion air inlet to any other appliance	6-in (15cm) for appliances ≤ 10,000 Btuh (3kW), 12-in (30cm) for appliances > 10,000 Btuh (3kW) and ≤ 100,000 Btuh (30kW), 36-in (91cm) for appliances > 100,000 Btuh (30kW)	6-in (15cm) for appliances ≤ 10,000 Btuh (3kW), 9-in (23cm) for appliances > 10,000 Btuh (3kW) and ≤ 50,000 Btuh (15kW), 12-in (30 cm) for appliances > 50,000 Btuh (15kW)
K= Clearance to a mechanical air supply inlet	6ft (1.83m)	3ft (91cm) above if within 10ft (3m) horizontally
L= Clearance above paved sidewalk or paved driveway located on public property	7ft (2.13m) †	7ft (2.13m) †
M= Clearance under veranda, porch deck, or balcony	12-in (30cm) ‡	12-in (30cm) ‡

1	In accordance with the current CSA B149.1, Natural Gas and Propane Installation Code
2	In Accordance with the current ANSI Z223.1/NFPA 54, National Fuel Gas Code
†	A vent shall not terminate directly above a sidewalk or paved driveway that is located between two single family dwellings and serves both dwellings
‡	Permitted only if veranda,, porch, deck, or balcony is fully open on a minimum of two sides beneath the floor.
*	For clearances not specified in ANSI Z223.1/NFPA 54 or CSA B149.1, one of the following shall be indicated:

Clearance in accordance with local installation codes and the requirements of the gas supplier.

Figure 24

GAS SUPPLY

The gas pipeline can be brought in through the right or left side of the appliance. Consult the current National Fuel Gas Code, ANSI Z223.1 CAN/CGA-B149 (.1 or .2) installation code.

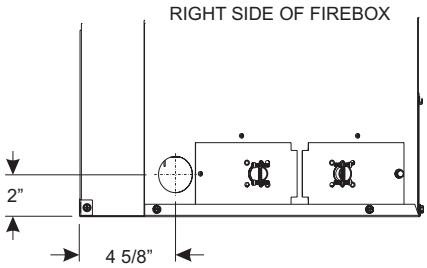

Figure 25

FLEXIBLE GAS LINE CONNECTION

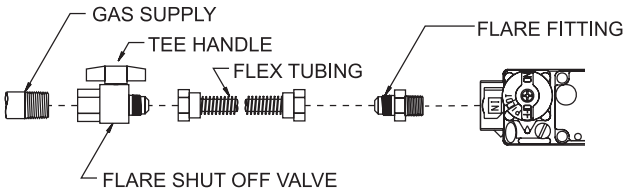

Figure 26

Recommended Gas Pipe Diameter

Pipe Length	Schedule 40 Pipe Inside Diameter (Inches)		Tubing, Type L Outside Diameter (Inches)	
	Nat	LP	Nat	LP
0-10 feet	1/2	3/8	1/2	3/8
10-40 feet	1/2	1/2	5/8	1/2
40-100 feet	1/2	1/2	3/4	1/2
100-150 feet	3/4	1/2	7/8	3/4

NOTICE: Never use plastic pipe. Check to confirm whether your local codes allow copper tubing or galvanized.
NOTICE: Because some municipalities have additional local codes, consult your local authority and installation code.

The use of the following gas connectors is recommended:
— ANSI Z21.24 Appliance Connectors of Corrugated Metal Tubing and Fittings.
— ANSI Z21.45 Assembled Flexible Appliance Connectors of Other Than All-Metal Construction

The above connectors may be used if acceptable by the authority having jurisdiction. The Commonwealth of Massachusetts requires that a flexible appliance connector cannot exceed three feet in length. A gas valve and ground joint union should be installed in the gas line upstream of the gas control to aid in servicing. It is required by the National Fuel Gas Code that a drip leg be installed near the gas inlet. **See Figure 25.** This should consist of a vertical length of pipe tee connected into the gas line that is capped on the bottom in which condensation and foreign particles may collect.

Installing a New Main Gas Supply Valve (Check Local Code)
Each appliance should have its own manual gas supply valve.
A manual main gas supply valve should be located in the vicinity of the unit. Where none exists, or where its size or location is not adequate, contact your local authorized installer for installation or relocation.
Compounds used on threaded joints of gas piping shall be resistant to the action of liquefied petroleum gases.

The gas lines must be checked for leaks by the installer. This should be done with a soap solution watching for bubbles on all exposed connections, and if unexposed, a pressure test should be made.

⚠ WARNING

Never use an exposed flame to check for leaks. Appliance must be disconnected from piping at inlet of control valve and pipe capped or plugged for pressure test. Never pressure test with appliance connected; control valve will sustain damage!

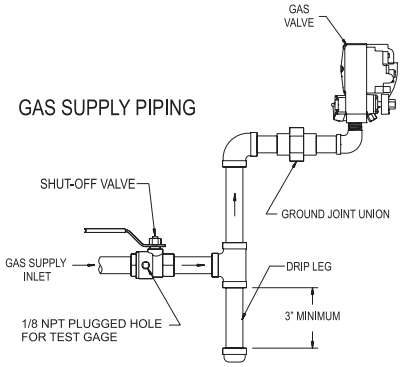

Figure 27

NOTICE: The millivolt gas controls are equipped with a captured screw type pressure test point, therefore it is not necessary to provide a 1/8 inch test point up stream of the control.
On direct ignition valves, hex plugs may be replaced with hose fittings for pressure checks, then reinstalled before operating fireplace.
When using copper or flex connector use only approved fittings.
The fireplace and its individual shut off valve must be disconnected from supply piping system during any pressure testing of that system at test pressures in excess of 1/2 psig (3.5kPa).
The fireplace must be isolated from the gas supply piping system by closing its individual manual shut off valve during any pressure testing of the gas supply piping system at test pressures equal to or less than 1/2 psig (3.5kPa).

⚠ WARNING

Pressures in excess of 1/2 psig (14 inches w.c.) (3.5kPa) on the fireplace gas valve, may damage the valve.

Checking Manifold Pressures
Both Propane and Natural gas valves have a built-in pressure regulator.

Natural gas models will have a manifold pressure of approximately 3.5 inches w.c. (.871kPa) at the valve outlet with the inlet pressure to the valve from a minimum of 4.5 inches w.c. (1.120kPa) for the purpose of input adjustment to a maximum of 14.0 inches w.c. (3.484kPa).

Propane gas models will have a manifold pressure approximately 10.0 inches w.c. (2.49kPa) at the valve outlet with the inlet pressure to the valve from a minimum of 10.8 inches w.c. (2.68kPa) for the purpose of input adjustment to a maximum of 14.0 inches w.c. (3.484 kPa).

	Gas Supply Pressure (inches w.c.)		
	Minimum	Normal	Maximum
Natural Gas	4.5	7.0	14.0
LP (Propane)	10.8	11.0	14.0
	Manifold Pressure (inches w.c.)		
Natural Gas	3.5 - Normal (HI)		
LP (Propane)	10.0 - Normal (HI)		

SAFETY INFORMATION FOR USERS OF LP GAS

Propane (LP-Gas) is flammable and can cause fires and explosions. In its natural state, propane is odorless and colorless. You may not know all the following safety precautions which can protect both you and your family from an accident. Read them carefully now, then review them point by point with the members of your household. Someday when there may not be a minute to lose, everyone's safety will depend on knowing exactly what to do. If, after reading the following information, you feel you still need more information, please contact your gas supplier.

LP-GAS WARNING ODOR

If a gas leak happens, you should be able to smell the gas because of the odorant put in the LP-Gas. That's your signal to go into immediate action!

- Do not operate electric switches, light matches, or your phone. Do not do anything that could ignite the gas.
- Get everyone out of the building, vehicle, trailer, or area. Do that IMMEDIATELY.
- Close all gas tank or cylinder supply valves.
- LP-Gas is heavier than air and may settle in low areas such as basements. When you have reason to suspect a gas leak, keep out of basements and other low areas. Stay out until firefighters declare them to be safe.
- Use your neighbor's phone and call a trained LP-Gas service person and the fire department. Even though you may not continue to smell gas, do not turn on the gas again. Do not re-enter the building, vehicle, trailer, or area.
- Finally, let the service technician and firefighters check for escaped gas. Have them air out the area before you return. Properly trained LP-Gas service people should repair the leak, then check and relight the gas appliance for you.

NO ODOR DETECTED - ODOR FADE

Some people cannot smell the odor of the chemical put into the gas. You must find out if you can smell the odorant in propane. Smoking can decrease your ability to smell. Being around an odor for a time can affect your sensitivity or ability to detect that odor. Sometimes other odors in the area mask the gas odor. People may not smell the gas odor or their minds are on something else. Thinking about smelling a gas odor can make it easier to smell.

The odorant in LP-Gas is colorless, and it can fade under some circumstances. For example, if there is an underground leak, the movement of the gas through soil can filter the odorant. Odorants in LP-Gas also are subject to oxidation. This fading can occur if there is rust inside the storage tank or in iron gas pipes.

The odorant in escaped gas can adsorb or absorb onto or into walls, masonry and other materials and fabrics in a room. That will take some of the odorant out of the gas, reducing its odor intensity.

LP-Gas may stratify in a closed area, and the odor intensity could vary at different levels. Because it is heavier than air, there may be more odor at lower levels. Always be sensitive to the slightest gas odor. If you detect any odor, treat it as a serious leak. Immediately go into action as instructed earlier.

SOME POINTS TO REMEMBER

- **Learn to recognize the odor of LP-Gas.** Your local LP-Gas Dealer can give you a "Scratch and Sniff" pamphlet. Use it to find out what the propane odor smells like. If you suspect that your LP-Gas has a weak or abnormal odor, call your LP-Gas Dealer.
- If you are not qualified, do not light pilot lights, perform service, or make adjustments to appliances on the LP-Gas system. If you are qualified, consciously think about the odor of LP-Gas prior to and while lighting pilot lights or performing service or making adjustments.
- Sometimes a basement or a closed-up house has a musty smell that can cover up the LP-Gas odor. Do not try to light pilot lights, perform service, or make adjustments in an area where the conditions are such that you may not detect the odor if there has been a leak of LP-Gas.
- Odors fade, due to oxidation by rust or adsorption on walls of new cylinders and tanks. Therefore, people should be particularly alert and careful when new tanks or cylinders are placed in service. Odor fade can occur in new tanks, or reinstalled old tanks, if they are filled and allowed to set too long before refilling. Cylinders and tanks which have been out of service for a time may develop internal rust which will cause odor fade. If such conditions are suspected to exist, a periodic sniff test of the gas is advisable. **If you have any question about the gas odor, call your LP-Gas dealer. A periodic sniff test of the LP-Gas is a good safety measure under any condition.**
- If, at any time, you do not smell the LP-Gas odorant and you think you should, assume you have a leak. Then take the same immediate action recommended above for the occasion when you do detect the odorized LP-Gas.
- If you experience a complete "gas out," (the container is under no vapor pressure), turn the tank valve off immediately. If the container valve is left on, the container may draw in some air through openings such as pilot light orifices. If this occurs, some new internal rusting could occur. If the valve is left open, then treat the container as a new tank. Always be sure your container is under vapor pressure by turning it off at the container before it goes completely empty or having it refilled before it is completely empty.

LOCATING FIREPLACE

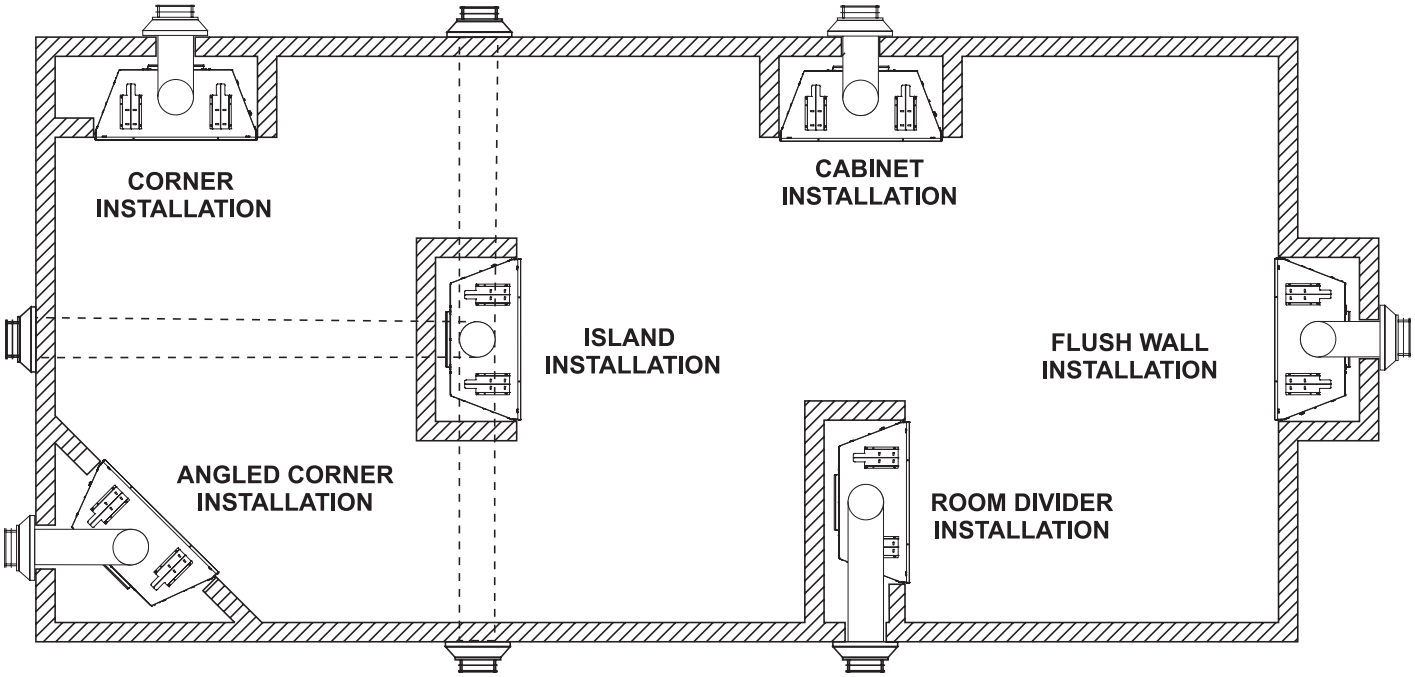

NOTICE: Island and Room Divider installation is possible as long as the horizontal portion of the vent system does not exceed 20 feet with a minimum vertical run of 8 feet. See details in Venting Section.

When you install your Direct Vent Fireplace in Room divider or Flat on wall corner positions, a minimum of 6 inches clearance must be maintained from the perpendicular wall and the front edge of the appliance.

Figure 28

JUNCTION BOX WIRING INSTALLATION INSTRUCTIONS

⚠ CAUTION

All wiring should be done by a qualified electrician and shall be in compliance with all local, city and state building codes. Before making the electrical connection, make sure that the main power supply is disconnected. The appliance, when installed, must be electrically grounded in accordance with local codes, or in the absence of local codes, with the National Electrical Code ANSI/NFPA 70 (Latest Edition).

Junction Box

For electric accessories such as a light kit or blower, make all wiring connections inside the junction box located on lower right side of fireplace.

Attach black to black and white to white. The ground wire should be attached to the ground on the junction box. **(Figure 29)**

NOTICE: A one inch diameter hole should be use to pass wiring through studs.

JUNCTION BOX WIRING

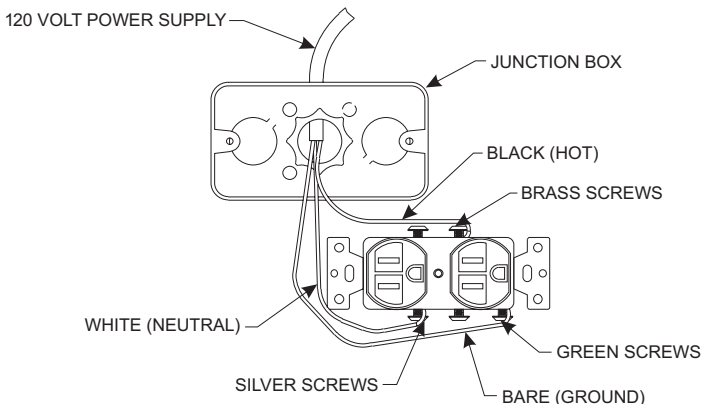

Figure 29

MILLIVOLT STANDING PILOT WIRING DIAGRAM (BP3 SERIES)

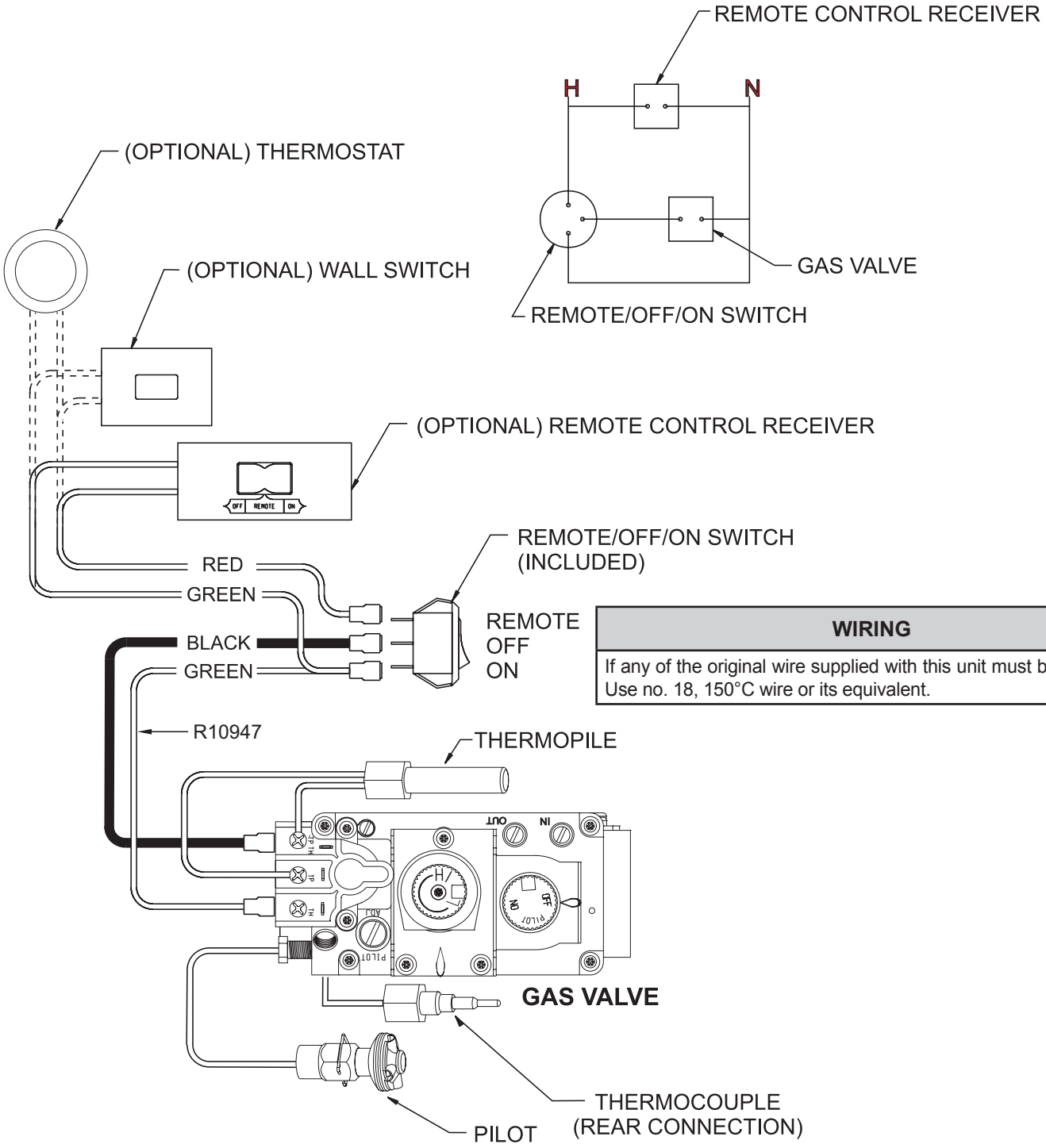

WIRING
If any of the original wire supplied with this unit must be replaced. Use no. 18, 150°C wire or its equivalent.

Figure 30

IPI ELECTRONIC SYSTEM WIRING DIAGRAM (BP7 SERIES)

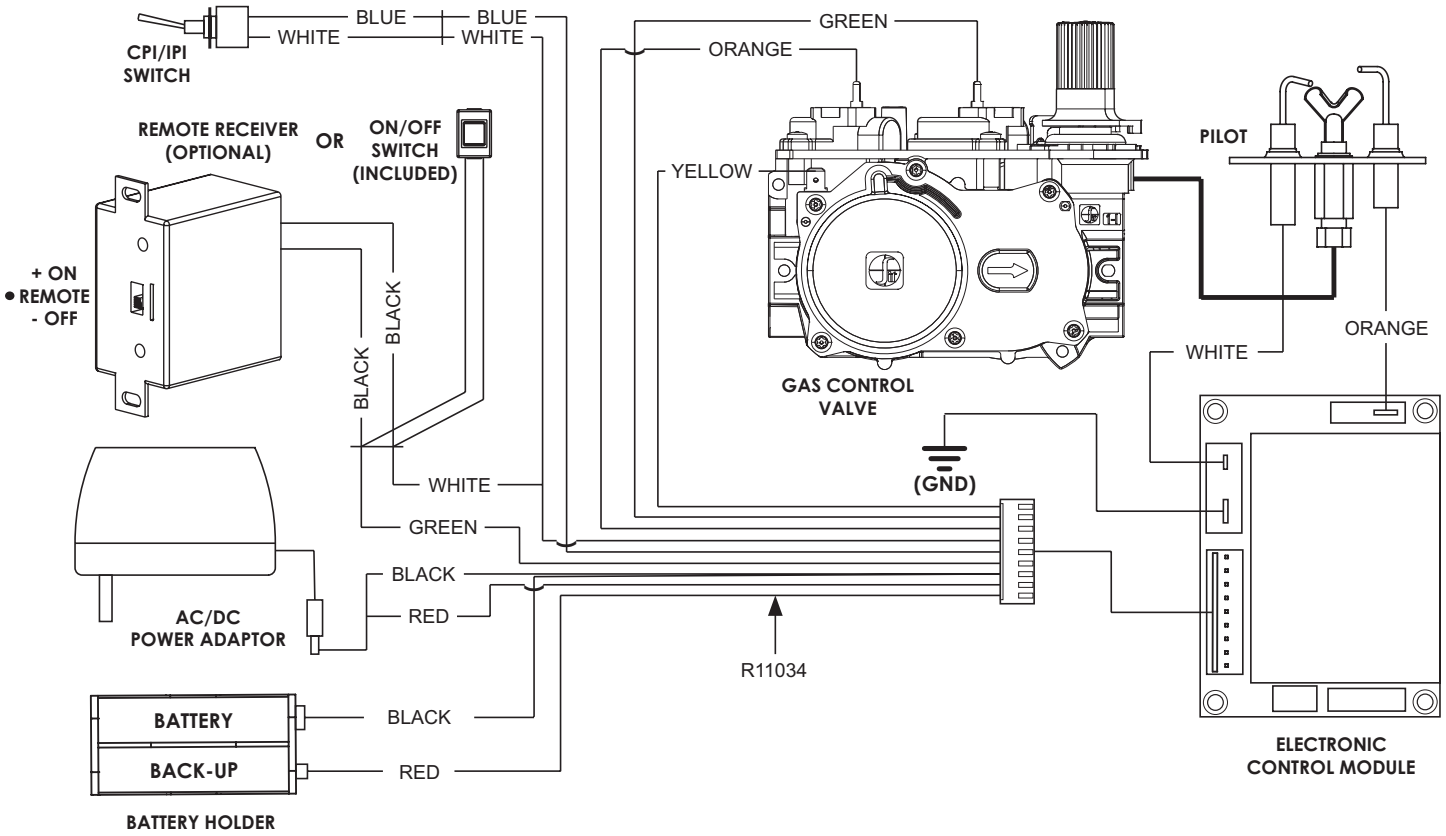

⚠ WARNING
Improper installation, adjustment, alteration, service or maintenance can cause property damage, personal injury or loss of life. Installation and service must be performed by a qualified installer, service agency or the gas supplier.

WIRING
If any of the original wire supplied with this unit must be replaced. Use no. 18, 150°C wire or its equivalent.

INSTALLATION

You must install certain components before the fireplace is permanently installed. These include the direct-vent system, gas piping for the appliance and the electrical wiring. (If the optional blower is used).

The appliance can be mounted on any of the following surfaces:

1. A flat, hard combustible (burnable) surface.
2. A raised wooden platform.
3. Four corner supports. (Example: masonry blocks) Position these supports so they contact all four perimeter edges on the bottom of the unit.

FRAMING - IN THE WALL

Fireplace framing can be built before or after the fireplace is set in place. Framing should be positioned to accommodate wall covering and fireplace facing material. The fireplace framing should be constructed of 2 x 4 lumber. Refer to **Figure 31** for minimum framing dimensions.

NOTICE
Measure fireplace dimensions and verify framing methods, and wall covering details before framing construction begins.

NOTICE: For finishing to top of fireplace, refer to **Figure 35.**
NOTICE: Minimum chase top to top of framing edge is 24 inches. **See Figure 19.**

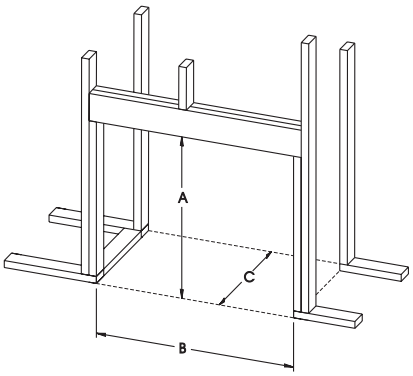

	DVCP32	DVCP36	DVCP42
	(Inches)		
A	47-1/4	47-1/4	49-1/4
B	34-3/4	37-3/4	43-3/4
C	17-5/8	17-5/8	17-5/8
D	38-3/4	42-1/4	46-5/8
E	59-3/8	62-1/8	68-1/8
F	29-3/8	31	34

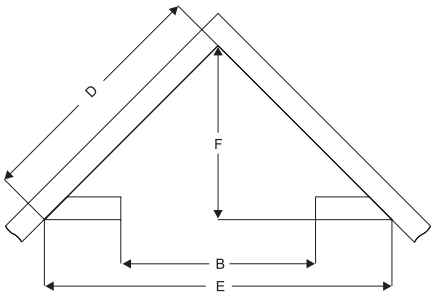

Figure 31

FRAMING THE FIREPLACE

1. Choose fireplace location.
2. Frame in fireplace with a header across the top. It is important to allow for finished face when setting the depth of the frame.
3. Attach fireplace to frame using adjustable frame. Preset depth to suit facing material (adjustable to 1/2 inch, 5/8 inch or 3/4 inch depths).
4. Loosen but do not remove the eight screws securing the nailing flanges to the firebox. **See Figure 32**.

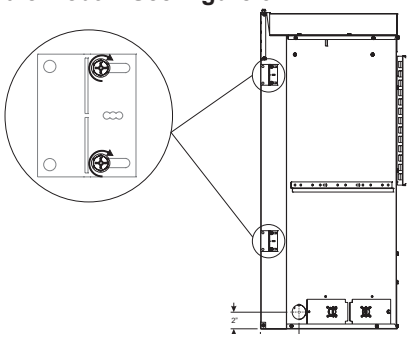

Figure 32

5. Measure from face of fireplace to face of drywall strip to determine final depth and adjust nailing flanges as shown in **Figure 33**.

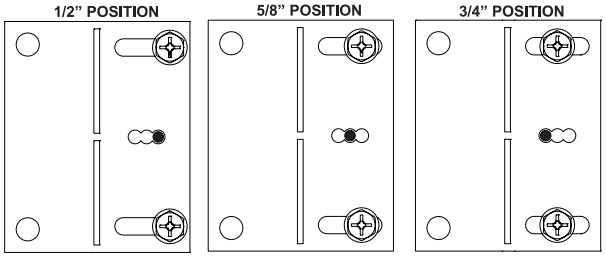

Figure 33

6. Tighten the eight screws loosened in step 4.
7. Bend the nailing flanges 90 degrees as shown in **Figure 34**.

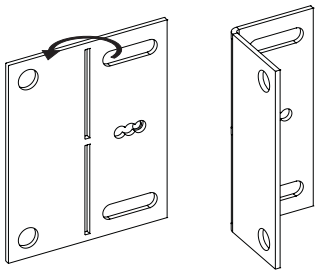

Figure 34

8. Attach the two backer studs to the firebox with four #10 x 1/2 Phillips screws (provided) as shown in **Figure 35.**
9. Attach the two backer studs to the vertical studs with four screws appropriate for installation (not provided) as shown **Figure 35.**
10. Slide unit into position and secure to wall with nailing flanges.
11. Mark non-combustible board for backer stud locations. Position the non-combustible board and secure with four #8 x 1 self-drilling drywall screws (provided) as shown in **Figure 35**. Four screws appropriate for installation (not provided) screw into the header. **See Figure 35**. To avoid damage to the non-combustible board, do not use more screws.

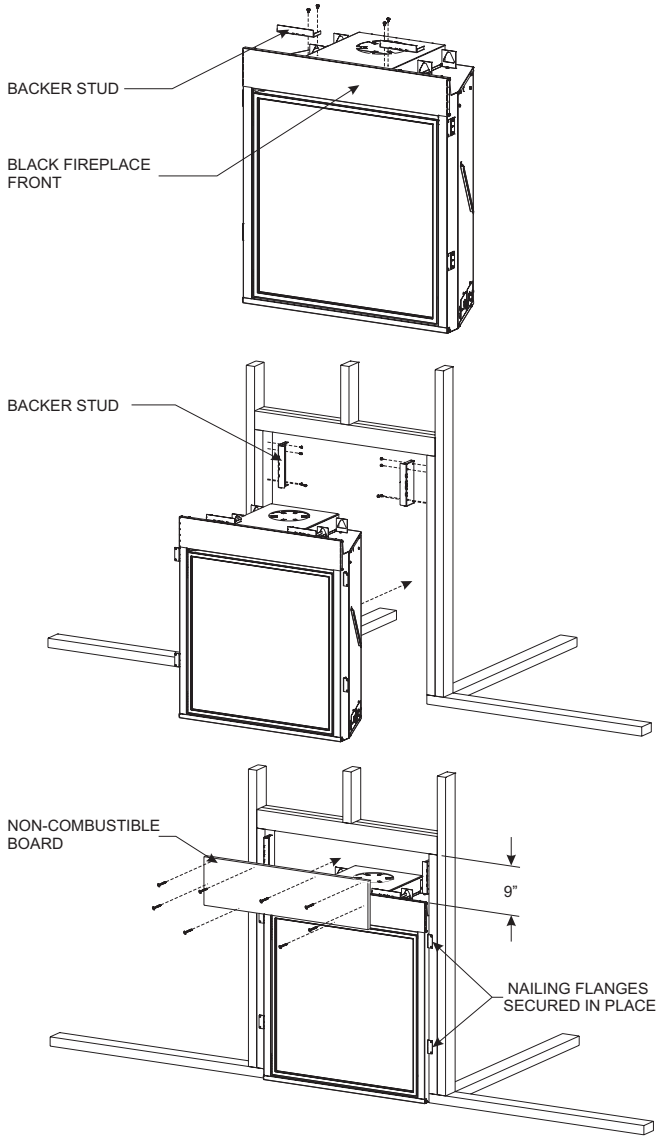

Figure 35

INSTALLING DECORATIVE MEDIA

1. Install modern cover. (Modern cover is shipped in section below burner). Remove packaging prior to install. Place modern cover behind burner and match stud locations on log support. **(Reference Figure 7).**
2. Insert log or rock set along with additional decorative media according to directions included with accessory.

VENT PIPE CLEARANCE

For horizontal vent, maintain a minimum 2 inch clearance to the bottom and sides of the vent, and 3 inch clearance to combustibles above the vent pipe. **See Figures 36 and 37.**

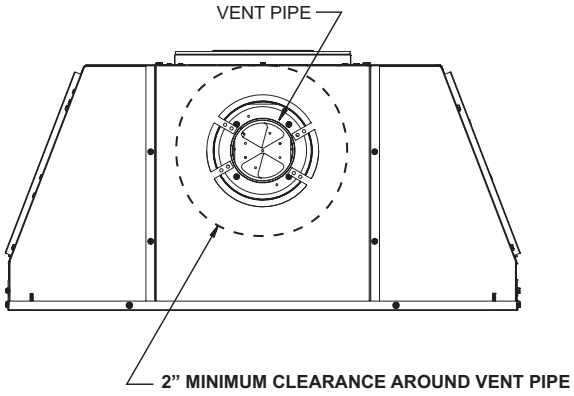

Figure 36

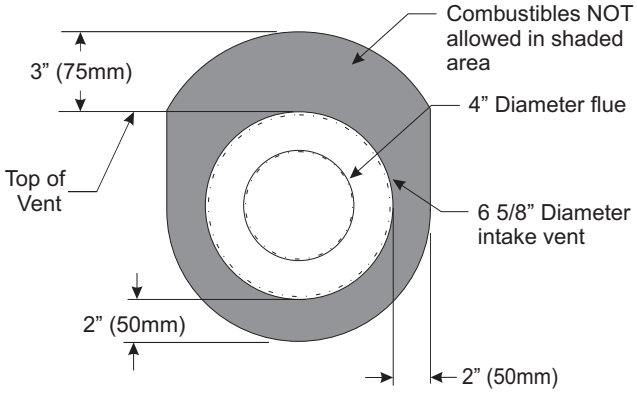

Figure 37

FINISHING

Finish the walls with the material of your choice. **Figure 21** on page 14 shows the minimum vertical and corresponding maximum horizontal dimensions of mantels or other combustible projections above the top front edge of the fireplace. Only non-combustible materials may be used to cover the black fireplace front.

⚠ WARNING

When finishing the fireplace never obstruct or modify the air inlet/outlet. Provide adequate clearances around air openings into the combustion chamber.

⚠ CAUTION

If the joints between the finished wall and the fireplace surround (top and sides) are sealed, use a 300 degree Fahrenheit minimum sealant. These joints are not required to be sealed. Only non-combustible material (using 300 degree Fahrenheit minimum adhesive if needed), can be applied as facing to the fireplace surround.

FLUSH WALL INSTALLATION

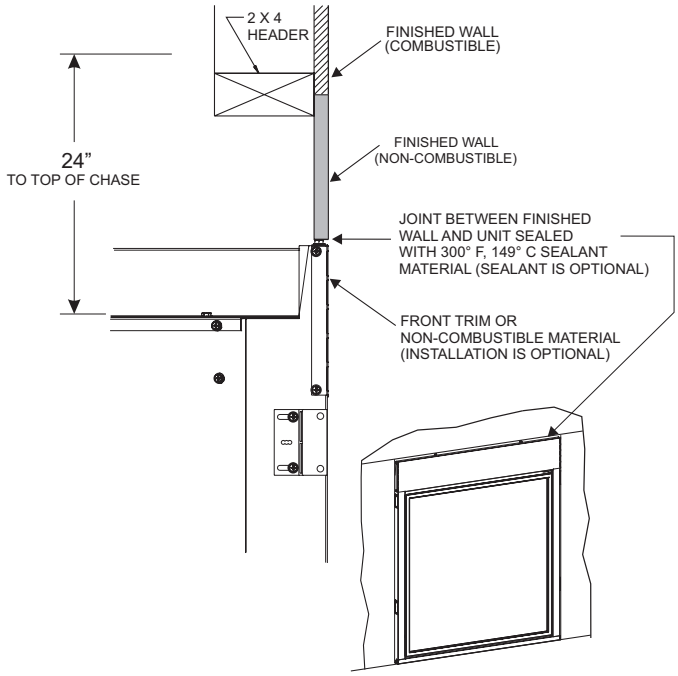

Figure 38

COMBUSTIBLE SURROUND INSTALLATION

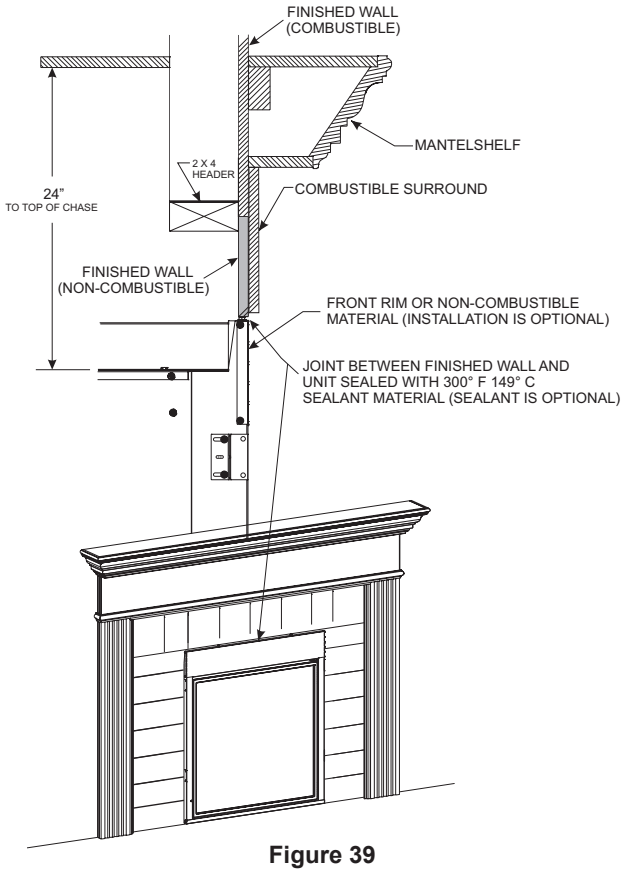

Figure 39

NOTICE: Cold climate installation recommendation: When installing this unit against a non-insulated exterior wall, it must conform to applicable codes.

VERTICAL, 90-DEGREE ELBOW WITH HORIZONTAL TERMINATION

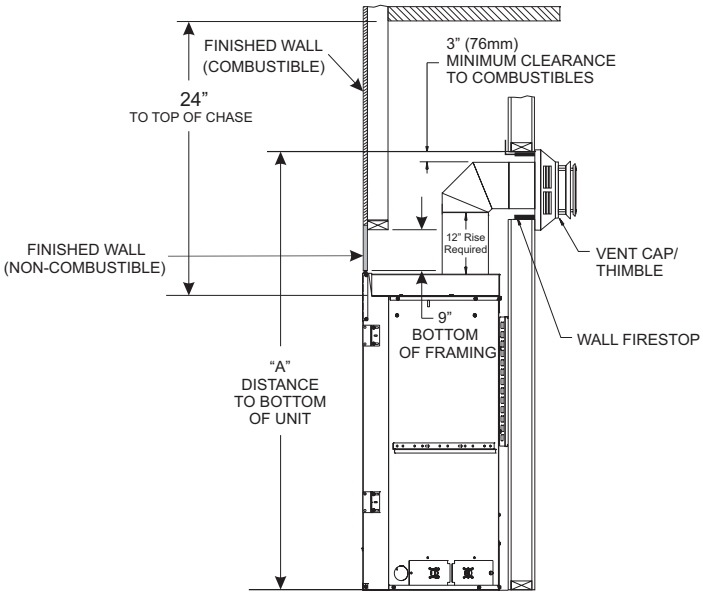

A DIMENSION	
(Inches)	
DVCP32	57-1/2
DVCP36	57-1/2
DVCP42	59-1/8

Figure 40

VERTICAL, 90-DEGREE ELBOW TO HORIZONTAL OUT THE WALL (12 inch minimum rise before elbow)

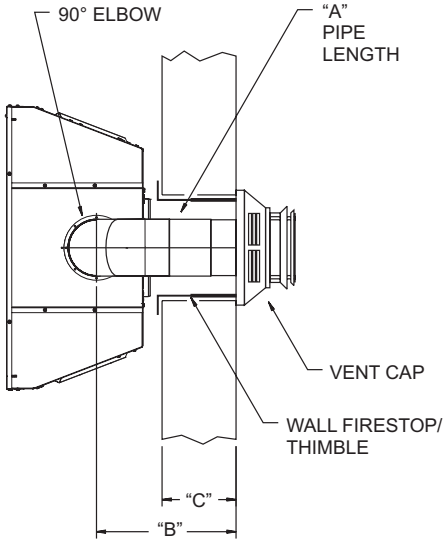

A	B	C
(Inches)		
6	11-1/4 to 12-3/4	4-3/4 to 6-1/4
9	14-1/4 to 15-3/4	7-3/4 to 9-1/4
12	17-1/4 to 18-3/4	10-3/4 to 12-1/4

Figure 41

CORNER INSTALLATION - VERTICAL, 90-DEGREE ELBOW TO HORIZONTAL OUT THE WALL (12 inch minimum rise before elbow)

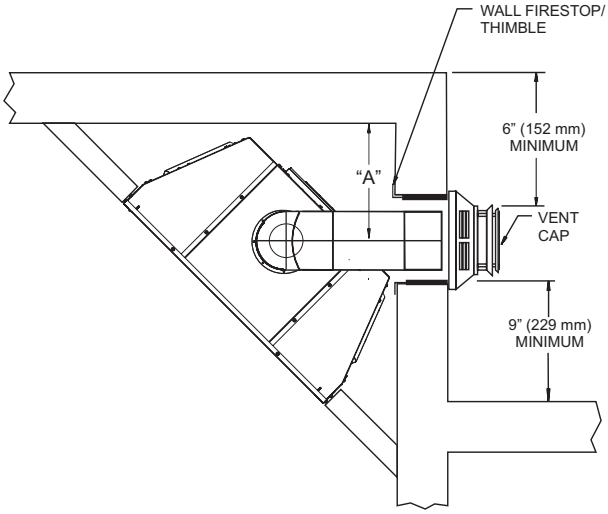

DIM.	DVCP32	DVCP36	DVCP42
(Inches)			
A	12-3/4	13-3/4	15-15/16

Figure 42

VENT FRAMING

Installing Support Brackets

Install a horizontal pipe support used for each 3 feet of horizontal run to framing members. Allow 6 inch clearance to combustibles above vent pipe and elbows and 2 inch clearance on both sides and bottom.

Support vertical runs of this vent systems every 4 feet using wall brackets attached to the vent pipe and secured with nails or screws to structural framing.

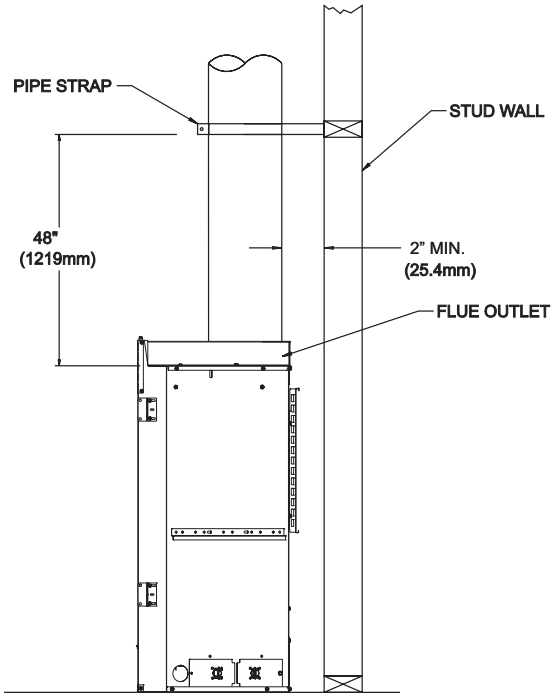

Figure 43

Installing Firestops

Firestops are required for safety whenever the vent system passes through a wall or a ceiling. These firestops act as a firebreak heat shield and as a means to ensure minimum clearances are maintained to the vent system.

Horizontal Firestops

Horizontal runs in the vent system which pass through walls require wall firestops on both sides of the wall.

Position the firestops on both sides of the framed opening. Secure firestop with nails or screws. The heat shields of the firestops MUST BE placed towards the top of the hole. Continue the vent run through the firestops.

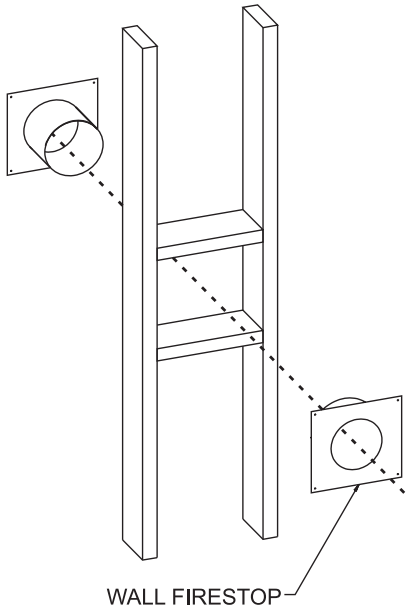

Figure 44

Vertical Firestops

Vertical vent runs which pass through ceilings require one ceiling firestop at the hole in each ceiling through which the vent passes. Position a plumb bob directly over the center of the vertical vent component and mark the ceiling to establish the center point of the vent. Drill a hole or drive a nail through this center point and check the floor above for any obstructions such as wiring or plumbing runs. Reposition the appliance and vent system, if necessary, to accommodate ceiling joists and/or obstructions.

Cut a 10-inch x 10-inch hole through the ceiling, using the center point previously marked. Frame the hole with framing lumber the same size as the ceiling joists. **See Figure 45.** If the area above the ceiling is not an attic, position and secure the ceiling firestop on the ceiling side of the previously cut and framed hole. **See Figure 56.** If the area above the ceiling is an attic, position and secure the firestop on top of the previously framed hole. **See Figure 46.**

NOTICE: Remove insulation from the framed area in the attic before installing the firestop and/or vent pipes.

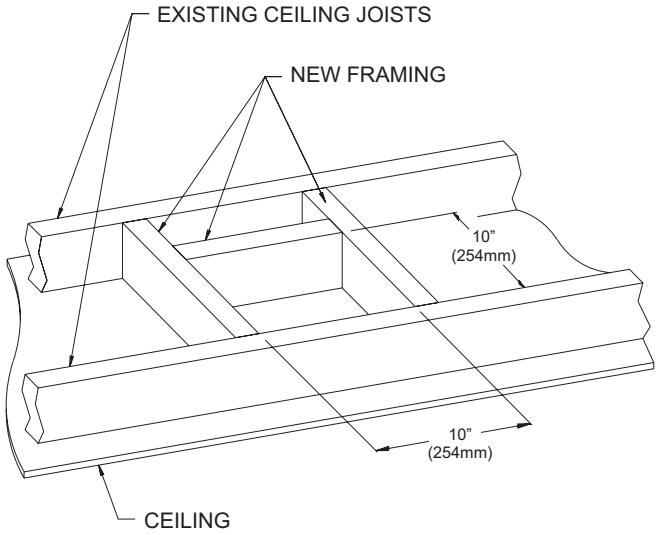

Figure 45

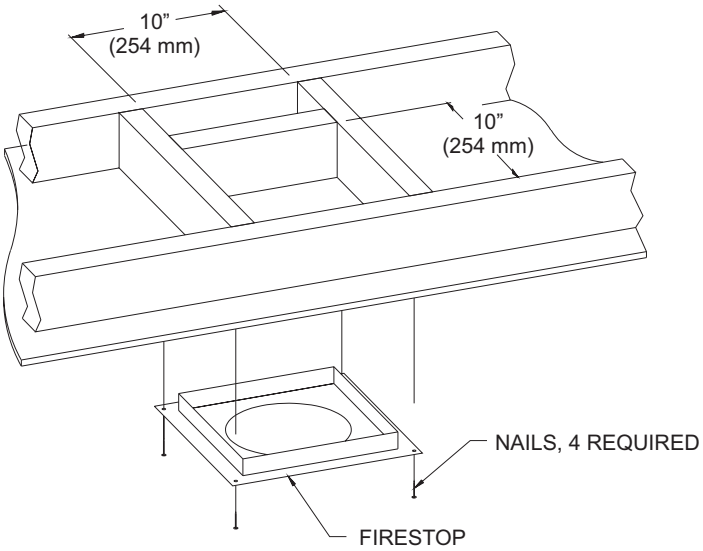

Figure 46

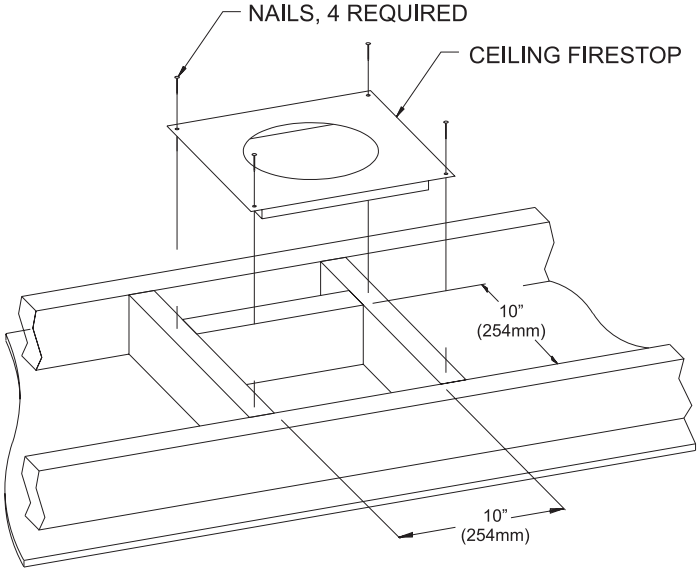

Figure 47

See Vertical Termination Pages 30 - 31.

VENT SYSTEM IDENTIFICATION

Begin the vent system installation by selecting the type of venting to be installed and the path that it will take. Verify that clearances are met throughout the path of the venting system. Determine if the fireplace is to be vented out the top.

NOTICE: Unit requires 12 inches of rise before elbow, as well as 2 inches of clearance around first 12 inches of pipe.

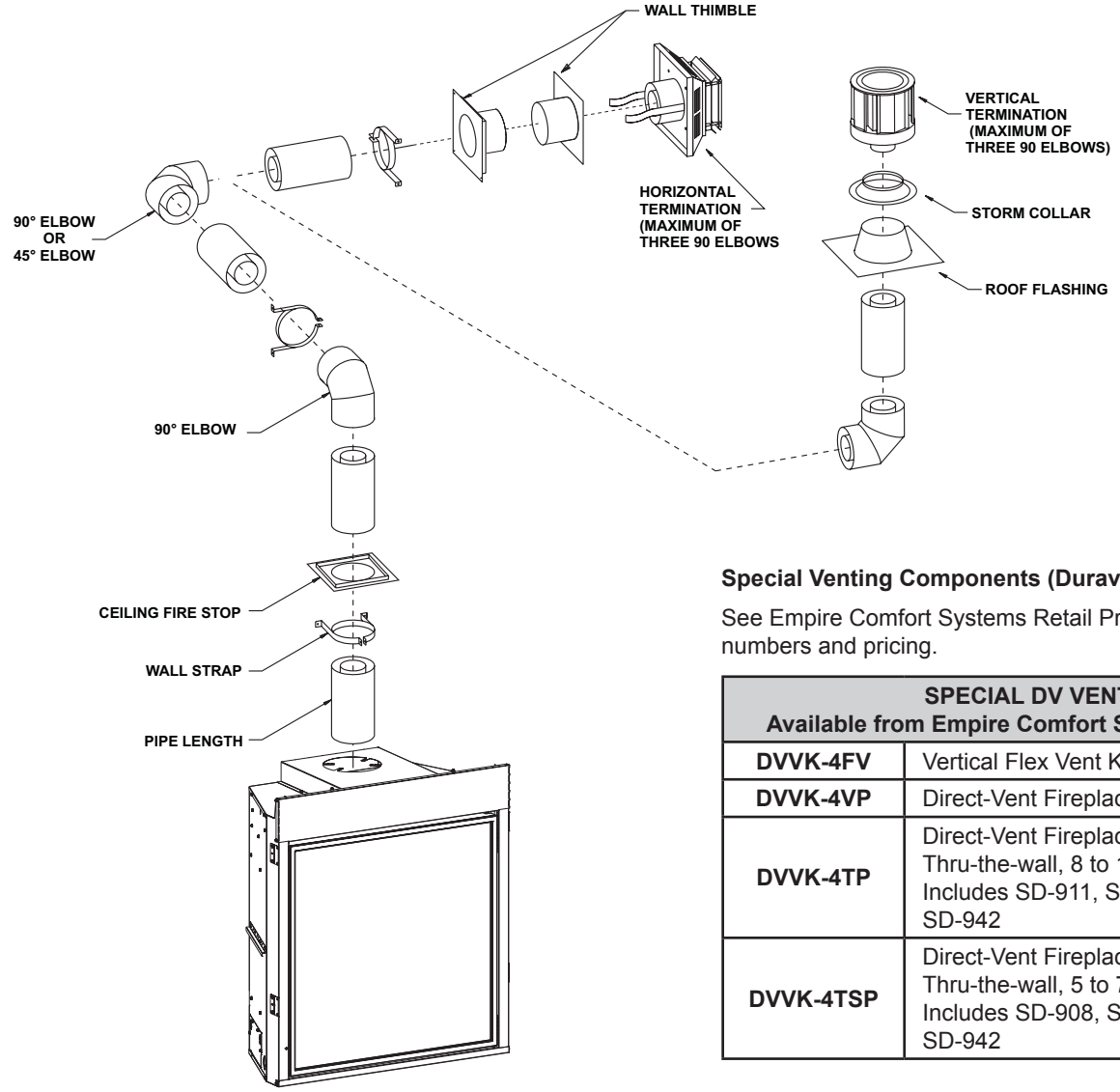

Figure 48

Special Venting Components (Duravent)

See Empire Comfort Systems Retail Price List for Venting part numbers and pricing.

SPECIAL DV VENT KITS Available from Empire Comfort Systems, Inc. dealers	
DVVK-4FV	Vertical Flex Vent Kit 4 inch x 7 inch
DVVK-4VP	Direct-Vent Fireplace Vent Kit - Vertical.
DVVK-4TP	Direct-Vent Fireplace Vent Kit for Top Vent, Thru-the-wall, 8 to 11-inch wall thickness, Includes SD-911, SD-985, SD-990 and SD-942
DVVK-4TSP	Direct-Vent Fireplace Vent Kit for Top Vent, Thru-the-wall, 5 to 7-inch wall thickness, Includes SD-908, SD-985, SD-990 and SD-942

SPECIAL VENT SYSTEMS

Use one of the following 4 x 6-5/8 vent systems:
Duravent® DVA-H2
Duravent® GS
American Metal Products
Selkirk Direct-Temp®
Security Secure Vent®
Empire Flexvent Kit DVVK-4F, refer to page 37 - 38.

Or the following 4 x 6-1/2 vent system:
Metal Fab Sure Seal® (Note: Starter Adaptor Pipe required)

To Use the Vent Graph

1. Determine the height of the center of the horizontal vent pipe. Using this dimension on the Sidewall Vent Graph, locate the point it intersects with the slanted graph line.
2. From the point of this intersection, draw a vertical line to the bottom of the graph.
3. Select the indicated dimension, and position the unit in accordance with same.

EXAMPLE A:
If the vertical dimension from the floor of the unit is 35 feet, the horizontal run to the outer wall flange must not exceed 6.5 feet.

EXAMPLE B:
If the vertical dimension from the floor of the unit is 6.5 feet, the horizontal run to the outer wall flange must not exceed 14.5 feet.

SPECIAL NOTICE: For each 45-degree elbow installed in the horizontal run, the length of the horizontal run MUST be reduced by 18 inches (457 millimeters). This does not apply if the 45-degree elbows are installed on the vertical part of the vent system. Reduce 3 feet for every 90-degree elbow.

Example: According to the chart the maximum horizontal vent length is 20 feet and if two 45-degree elbows are required in the horizontal vent it must be reduced to 17 feet.

The maximum number of 45-degree elbows permitted per side wall installation is two. These elbows can be installed in either the vertical or horizontal run.

NOTICE: Do not count the first elbow on vertical venting.

Venting Graph (Dimensions in Feet)

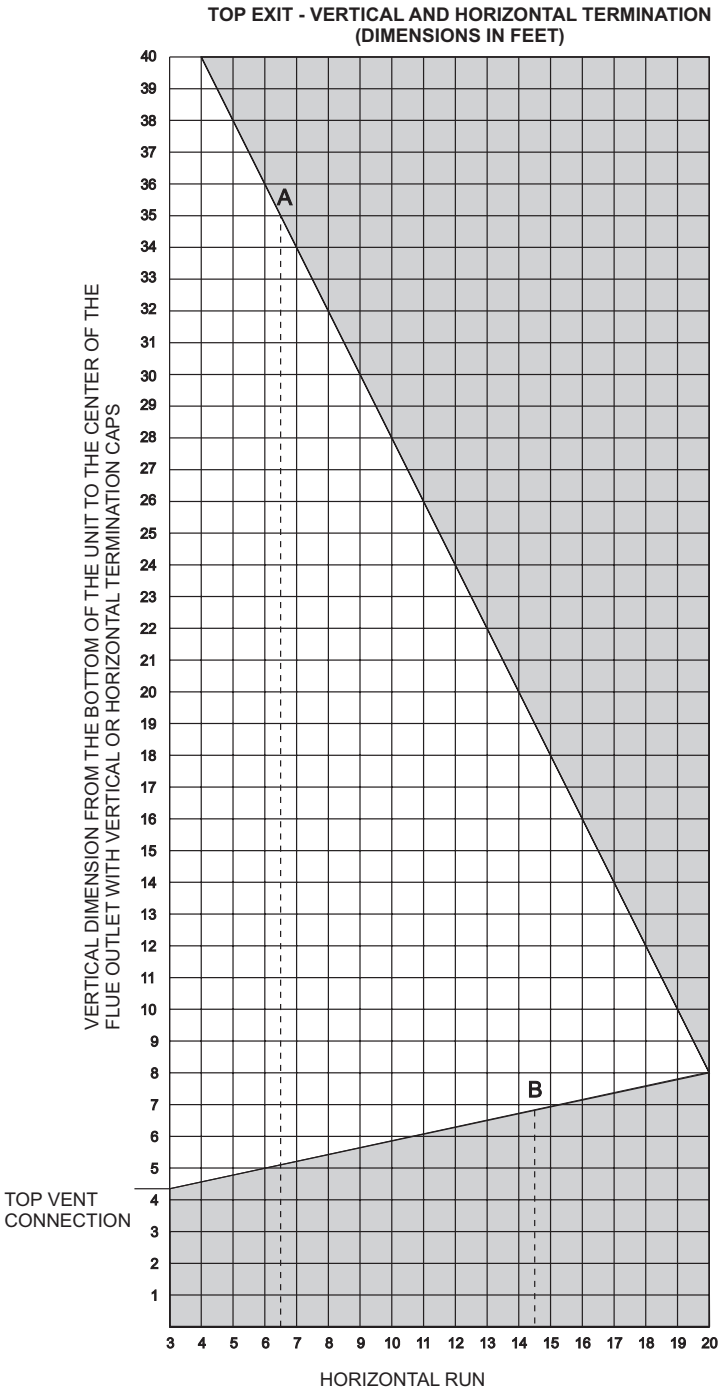

Acceptable vertical and horizontal vent run.
(40 feet maximum vertical and 20 feet maximum horizontal)

Unacceptable vertical and horizontal vent run.

Figure 49

NOTICE
Use flue restrictor for vertically terminated units only. Do not use for horizontally terminated units.

Figures 50 to 52 show the location and recommended openings for the flue restrictor. Adjustments may be made for each particular installation.

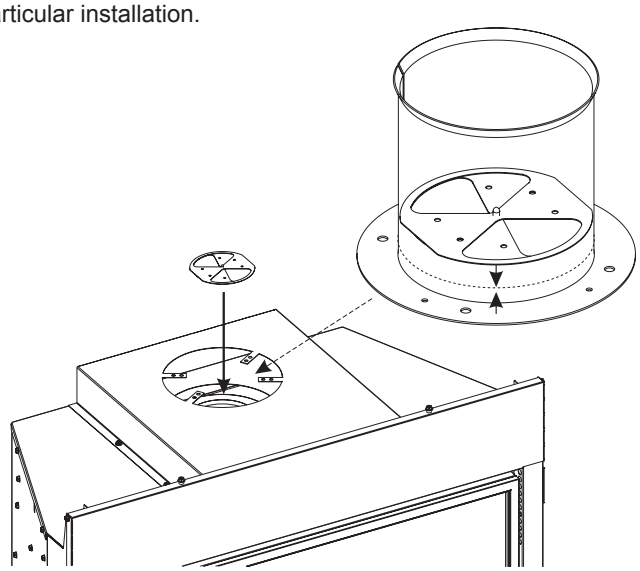

Figure 50

NOTICE: When installing flue restrictor, install with screws pointing in downward position.

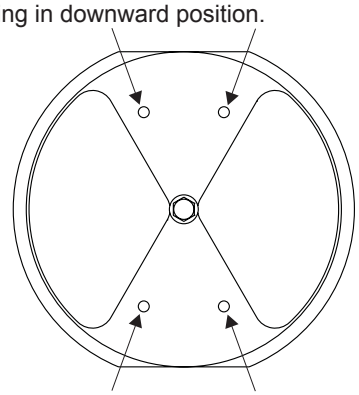

LP Setting - Figure 51

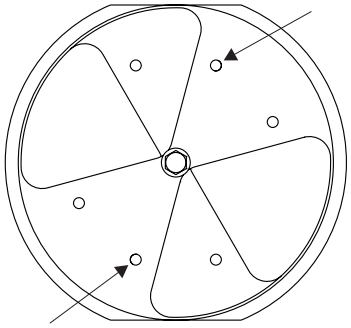

Natural Gas Setting - Figure 52

Below-Grade Installation

When it is not possible to meet the required vent termination clearances of 12 inches (305 millimeters) above grade level, a snorkel kit is recommended. It allows installation depth down to 7 inches (178 millimeters) below-grade level. The 7 inches (178 millimeters) is measured from the center of the horizontal vent pipe as it penetrates through the wall.

Observe the sidewall venting clearances. If the venting system is installed below-grade, we recommend a window well with adequate and proper drainage to be installed around the termination area.

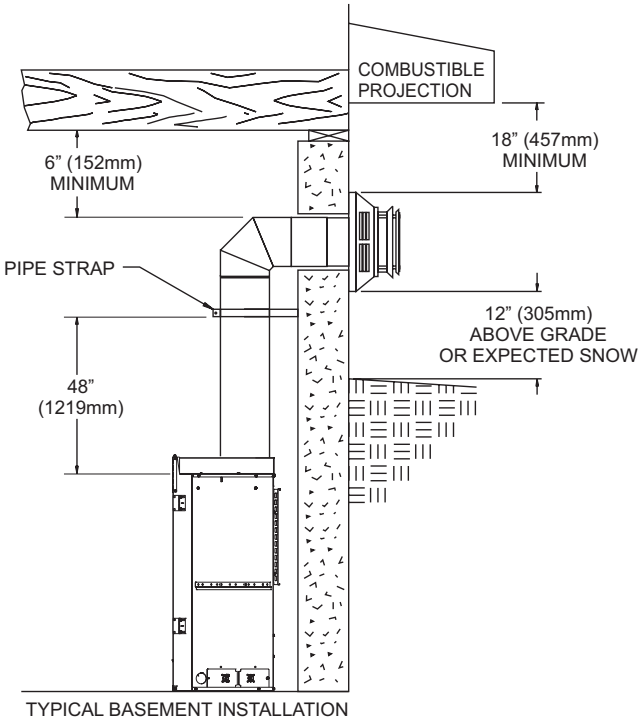

TYPICAL BASEMENT INSTALLATION

Figure 53

Example of venting system using one 90-degree elbow
Eight feet is minimum vertical vent run with 20 feet of maximum horizontal vent run. Vertical dimensions are based on center-line to center-line of pipe. Horizontal dimensions are based on center line of pipe to end of termination.

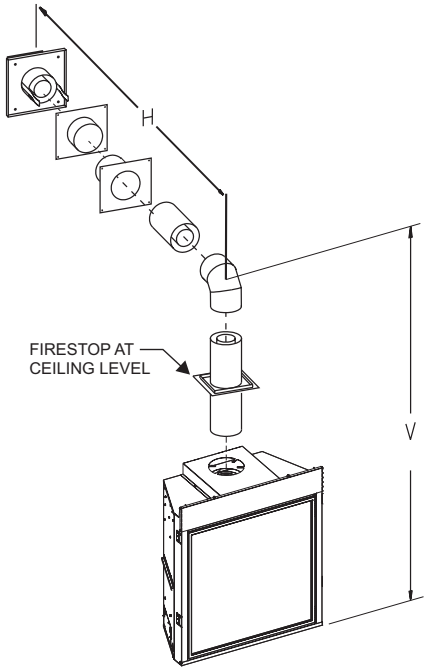

SEE GRAPH FOR PERMISSIBLE "H" AND "V" DIMENSIONS

Figure 54

Examples of venting systems using two 90-degree elbows.
V is the minimum vertical dimension and total of H1 + H2. V is also the maximum horizontal dimension. The maximum vertical and horizontal distances for the two 90-degree elbows as shown in **Figure 55** is 20 feet (6.1 meters).

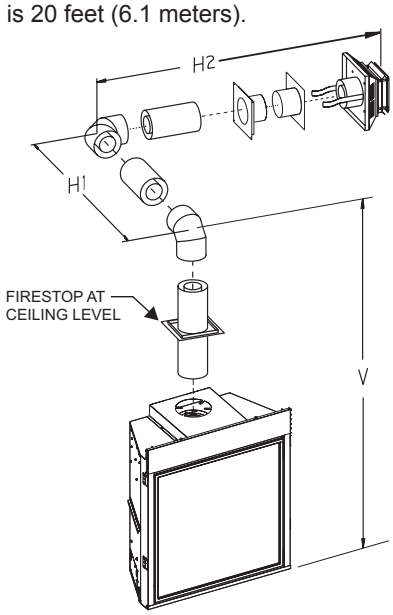

SEE GRAPH FOR PERMISSIBLE "H" AND "V" DIMENSIONS
NOTE: H1 AND H2 MUST BE ADDED TOGETHER TO USE CHART

Figure 55

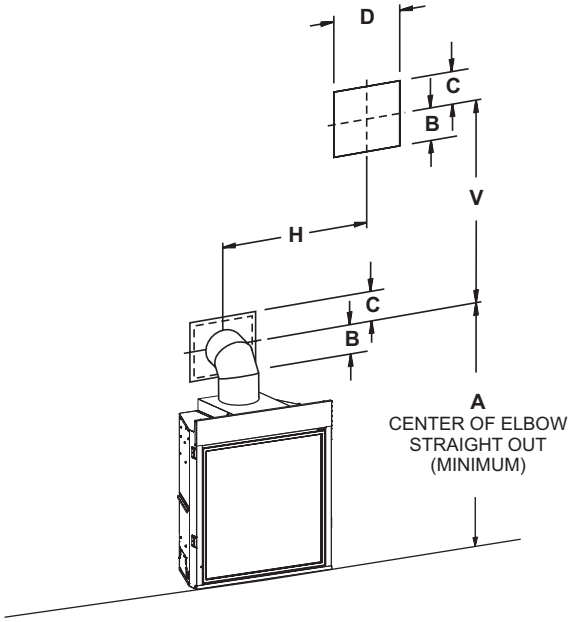

FIREPLACE SERIES	HARD ELBOW DIMENSIONS (in inches)			
	A	B	C	D
DVCC32	50-13/16	4-5/16	6-5/16	9-1/8
DVCC36	50-13/16	4	6	9-1/8
DVCC42	52-13/16	4	6	9-1/8

FIREPLACE SERIES	FLEX PIPE 90 DEGREE BEND (in inches)			
	A	B	C	D
DVCC32	51-11/16	4-1/2	6-1/2	9-1/8
DVCC36	51-11/16	4-1/2	6-1/2	9-1/8
DVCC42	53-11/16	4-1/2	6-1/2	9-1/8

Minimum hole location dimensions for through-the-wall horizontal installations with 90-degree elbow and 12 inch rise off top of fireplace.

See Figure 49 on **Page 29** for permissible horizontal and vertical dimensions.

Figure 56

Positioning the Fireplace
Determine the exact position of the appliance so the direct-vent termination will be centered (if possible) between two studs. This will avoid any extra framing. Assemble the vent pipes on the unit after it is moved into the final position.

Cutting the Hole
After the fireplace has been positioned in its permanent location, cut the hole through the exterior wall of the house. This hole must be 10 inches (254 millimeters) high x 10-5/8 inches (270 millimeters) wide with its center line determined by the amount of vertical rise and horizontal run of the termination. **See Figure 57.** When locating the hole, the bottom of the must be 12 inches (305 millimeters) above the ground level, and top of the cap must be no less than 18 inches (457 millimeters) below a combustible projection, and at least 9 inches (229 millimeters) to any wall running parallel to vent termination.

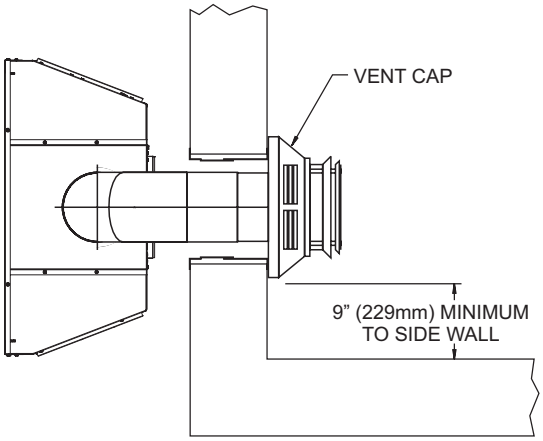

Figure 57

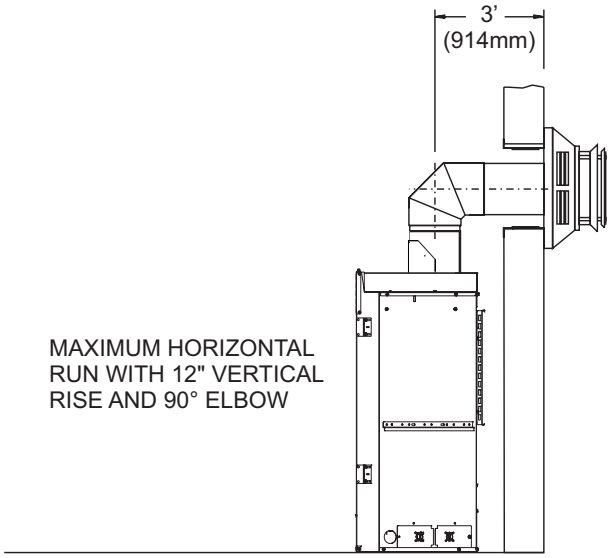

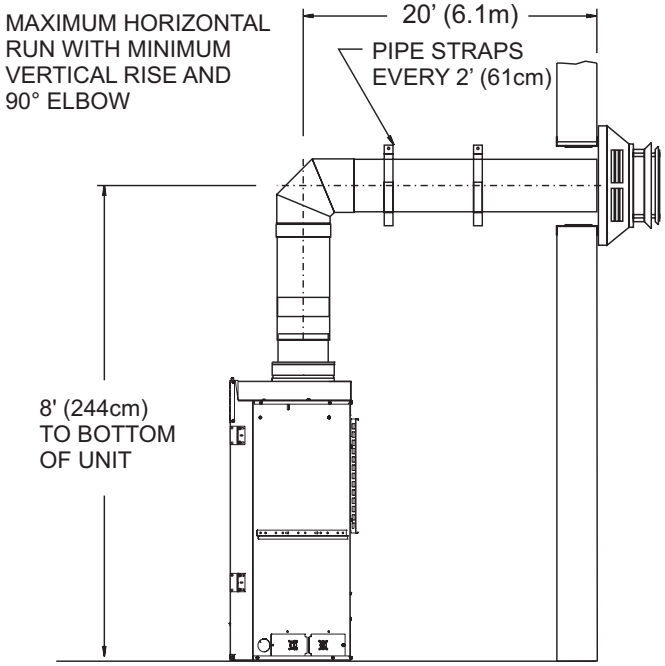

Figure 58

EXAMPLES - TOP VENT RUN

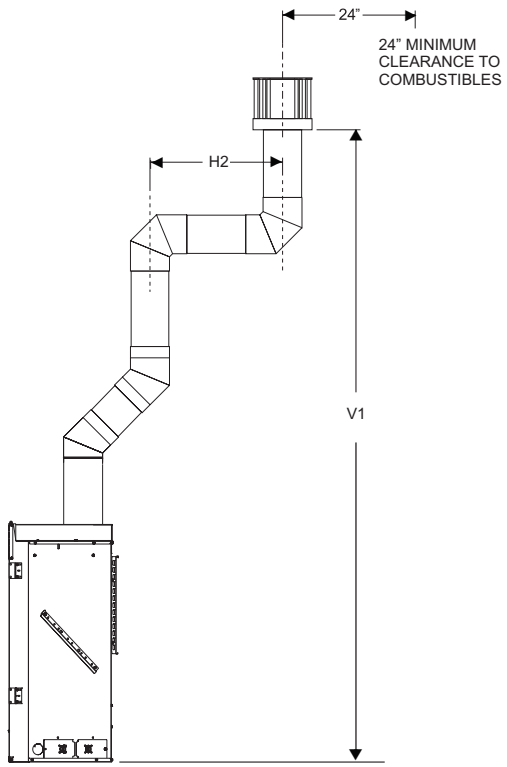

Figure 59

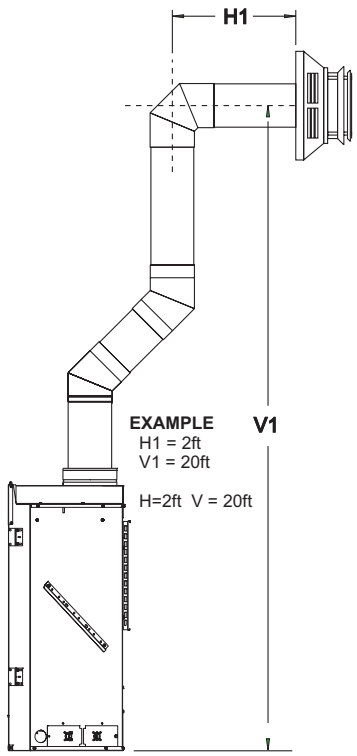

Figure 61

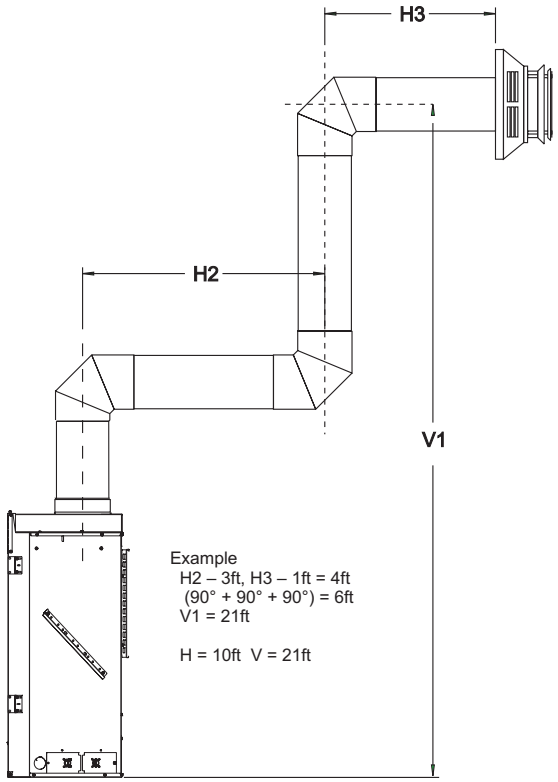

Figure 60

HORIZONTAL TERMINATION

One 90-Degree Elbow

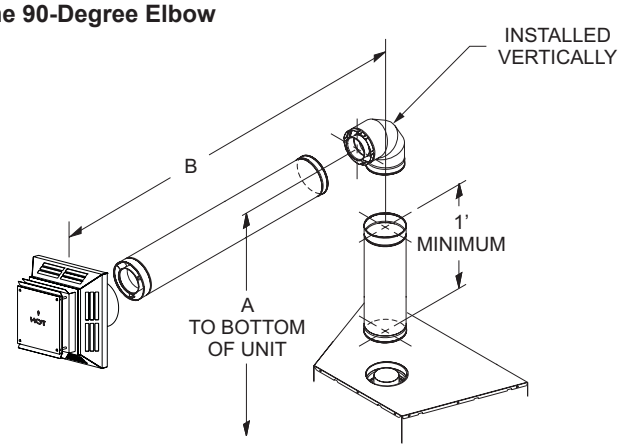

EXAMPLE VENT RUNS		
INITIAL PIPE LENGTH (Feet)	A-Vertical (Feet)	B-Horizontal (Feet)
1	15	12
2	6	6
3	7	9
4	8	12

Figure 62

NOTICE: Pipe straps must be used every 2 feet to secure venting.

Two 45-Degree Elbows

Installation requirements to replace the first 90-degree elbow with two 45-degree elbows:

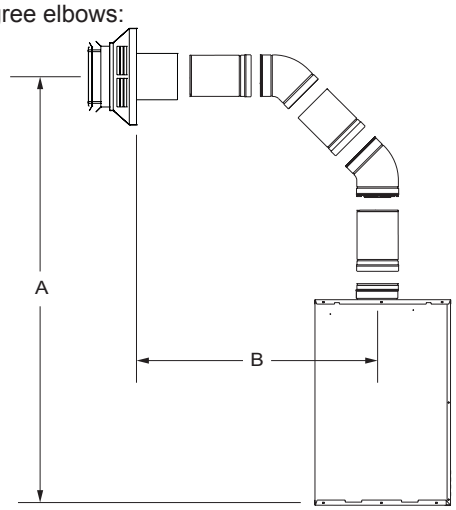

EXAMPLE VENT RUNS		
INITIAL PIPE LENGTH (Feet)	A-Vertical (Feet)	B-Horizontal (Feet)
1	6	6
2	7	9
3	8	12
4	9	15

Figure 63

Two 90-Degree Elbows

NOTICE: Subtract 3 feet from the total horizontal measurement for each 90-degree elbow installed horizontally. Subtract 1-1/2 feet from the total horizontal measurement for each 45-degree elbow installed horizontally.

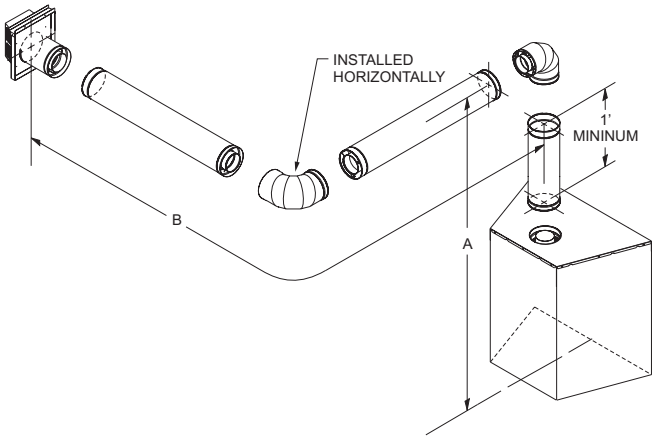

EXAMPLE VENT RUNS		
INITIAL PIPE LENGTH (Feet)	A-Vertical (Feet)	B-Horizontal (Feet)
1	5	Not Allowed
2	6	3
3	7	6
4	8	9

Figure 64

Three 90-Degree Elbows

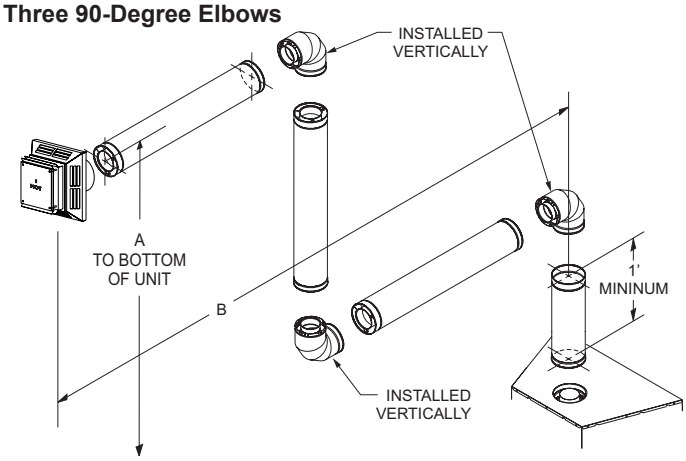

EXAMPLE VENT RUNS		
INITIAL PIPE LENGTH (Feet)	A-Vertical (Feet)	B-Horizontal (Feet)
1	5	Not Allowed
2	6	6
3	7	9
4	8	12

Figure 65

VERTICAL TERMINATION

Locate and mark the center point of the vent pipe using a nail on the underside of the roof. Drive the nail through the center point. Mark the outline of the roof hole around this center point.

NOTICE: Size of the roof hole dimensions depend on the pitch of the roof. Maintain a 2 inch (50 millimeter) clearance to the vertical pipe sections. This clearance is to all combustible material.

Cover the opening of the vent pipe and cut and frame the roof hole. Use framing lumber the same size as the roof rafters and install the frame securely. Flashing anchored to frame must withstand high winds. The storm collar is placed over this joint to make a water-tight seal. Non-hardening sealant should be used to completely seal this flashing installation.

Determining Minimum Vent Height Above the Roof.

⚠ WARNING

Major U.S. building codes specify minimum chimney and/or vent height above the roof top. These minimum heights are necessary to prevent a fire. These specifications are summarized in Figure 66.

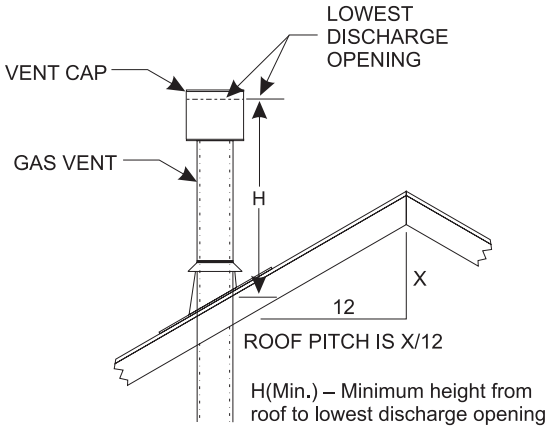

ROOF PITCH	MINIMUM HEIGHT	
	(Inches)	(Millimeters)
Flat to 6/12	12	305
6/12 to 7/12	15	381
Over 7/12 to 8/12	18	457
Over 8/12 to 16/12	24	610
Over 16/12 to 21/12	36	914

Figure 66

Note that for steep roof pitches, the vent height must be increased. In high wind conditions, nearby trees, adjoining roof lines, steep pitched roofs, and other similar factors can result in poor draft, or down-drafting. In these cases, increasing the vent height may solve this problem.

General Maintenance

Inspect venting system semi-annually as follows:

1. Check for corrosion areas of the venting system exposed to the elements. These will appear as rust spots or streaks and, in extreme cases, holes. Replace damaged components should immediately.
2. Remove the cap and shine a flashlight down the vent. Remove any bird nests or other foreign material.
3. Check for evidence of excessive condensate, such as water droplets forming in the inner liner and subsequently dripping out at joints. Condensate can cause corrosion of caps, pipe and fittings. It may be caused by having excessive lateral runs, too many elbows and exterior portions of the system being exposed to cold weather.
4. Inspect joints to verify that no pipe sections or fittings have been disturbed and, consequently, loosened. Also, check mechanical supports, such as wall straps or plumbers' tape for rigidity.

Venting termination shall not be recessed into a wall or siding.

A removable panel or other means must be provided in the enclosure for visual inspection of the flue connection.

NOTICE: This also pertains to vertical vent systems installed on the outside of the building.

Slide the vertical vent cap over the ends of the vent pipe and secure. **See Figure 67.**

Installing the Vent System in a Chase

A chase is a vertical structure built to enclose the gas fireplace and/or its vent system. Vertical vent runs on the outside of a building may be, but are not required to be installed inside a chase.

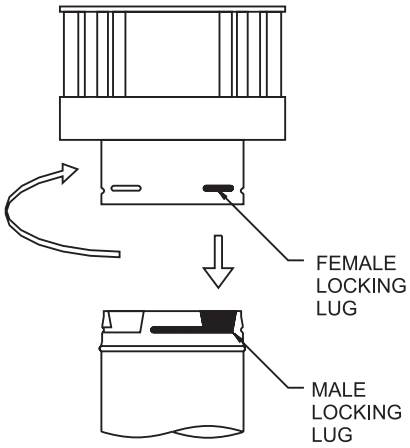

Figure 67

⚠ CAUTION

Installation requirements for firestop spacers and construction of the chase may vary with the type of building. Check local building codes to determine the requirements.

NOTICE: Build the chase large enough to the minimum clearance of combustible materials (including insulation) to the vent system. When installing the vent system in a chase, insulate the chase as you would the outside walls of your home. This is especially important in cold climates. Upon completion of chase framing, install the vent system by following the instructions in this manual.

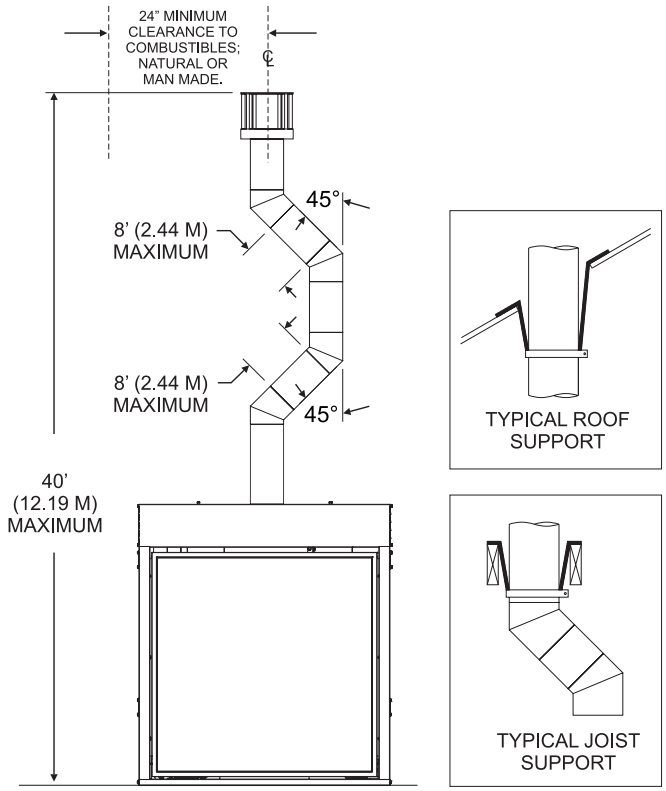

Figure 68

If two vertical runs terminate near each other, they must be placed a minimum of 12 inches apart if they are the same height. **See Figure 69.** If the vent terminations are not the same height, they must be positioned at least 24 inches apart to minimize draft issues between them.

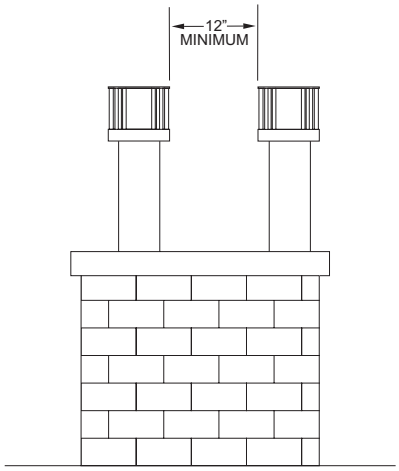

Figure 69

Vertical Through the Roof Applications

Your Gas Fireplace has been approved for:

a) Vertical installations up to 40 feet in height.
b) Two sets of 45 degree elbow offsets within these vertical installations. From 0 to a maximum of 8 feet a vent pipe can be used between elbows.
c) Wall straps must be used to support offset pipe every 4 feet.

This application will require that you first determine the roof pitch and use the appropriate venting components.

OFFSET CHART

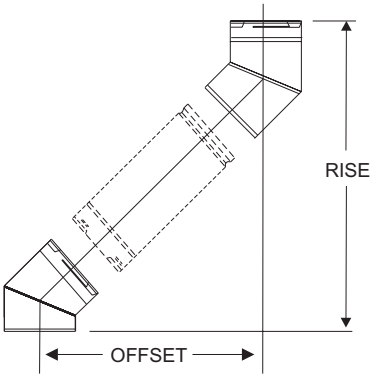

ELBOW	CHIMNEY SECTION	OFFSET	RISE
(Degrees)	(Inches)		
45	0	4-7/8	13-3/8
45	6	8	16-1/2
45	9	10-1/8	18-5/8
45	12	12-1/4	20-3/4
45	24	20-5/8	29-1/8
45	36	29	37-1/2
45	36	29	37-1/2
45	48	37-3/8	45-7/8

Figure 70

DVVK-4F FLEX VENT INSTRUCTIONS FOR HORIZONTAL TERMINATION

The following termination kits can only be used with direct vent fireplaces listed for use with Magnaflex DVVK-4F. Please check and verify your fireplace model number.

DVVK4F 4-in./7-in. - 48-in. FLEX TERMINATION KIT	
Item	**Qty**
Termination Cap	1
Wall Firestop/Thimble Assembly	1
2 Ply Alum Flex 4-in. Dia by 48-in. (with attached starter collar)	1
2 Ply Alum Flex 7-in. Dia by 48-in.	1
Flex Adapter Collar w/Gasket	1
Clamp 4-in. Dia	2
Clamp 7-in. Dia	2
Spring	3
Screws 1/8 x 3-in.	4
Self Tapping Screws #6 x 1/2-in.	16
Screws #6 x 1/2-in.	2
Deflector Shield	1

NOTICE: DVVK-4F Flex Vent Kit requires the SD46DVA-FCFX7 Flex Adaptor Collar Assembly, (purchased separately).
When installing a horizontal vent run from top connections, maintain at least a 1/2 inch rise for every 12 inches of vent run.

NOTICE

Always stretch and secure venting with wire or metal strapping to ensure that the horizontal runs do not sag. Vent connections should overlap a minimum of 1 inch for proper sealing.

⚠ WARNING

Because of sharp edges, always wear gloves when handling the flex vent components.

Follow the general venting requirements for vent termination location, vent lengths, and clearance to combustible materials.

Installing the DV Horizontal Flex Vent Kit

1. Unpack vent kit components and check for damaged or missing components.
2. To operate as designed, it is dependent on the use of all parts and procedures detailed in these instructions. Failure to follow these instructions may potentially affect the performance of this vent system and the attached appliance.
3. Replace the existing fireplace vent adapter with the fireplace adapter included in the vent kit. Install the adapter collar with the screws removed from the fireplace.

4a. Install the Wall Firestop/Thimble to the framed wall assembly using common nails (not supplied) as required through the wall. Refer to the venting charts in the fireplace manual to determine the proper height and size of the vent opening. The minimum framed opening should be 11 inches wide by 11 inches high. The minimum combustible clearance from the horizontal vent is 2 inches from sides and bottom, and 3 inches above the vent pipe **See Figure 71.**

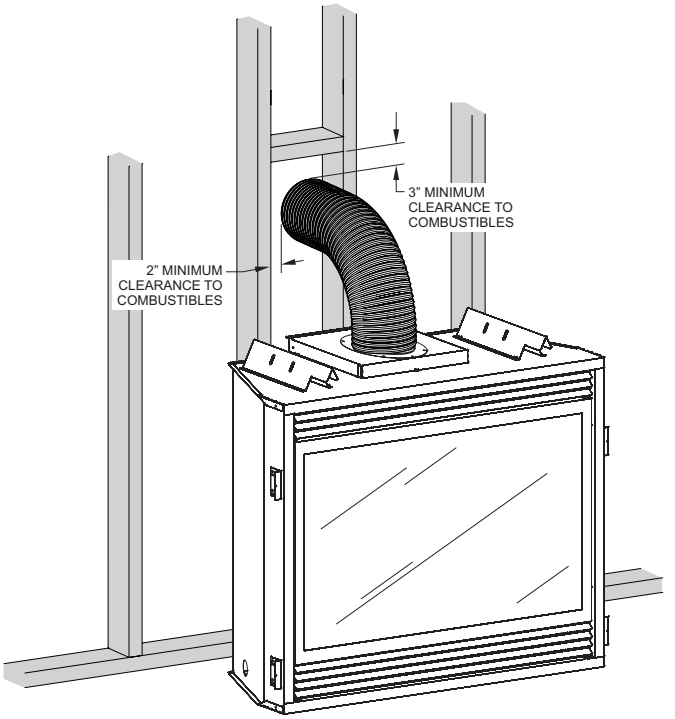

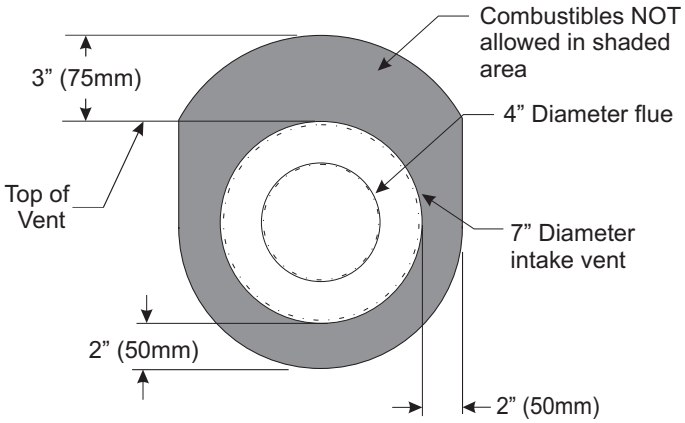

Figure 71

4b. Install the Wall Firestop/Thimble with the top clearance tab to the inside of the framed wall opening. Install the mating telescope thimble to the inside thimble, and secure the thimble wall plate to the exterior of the framed wall opening.

NOTICE

Do not force the Horizontal Vent Termination into the flex venting. Always stretch out the venting, and cut off excess vent material. Forcing the termination cap into the flex venting will deform the flue venting, which will restrict the exhaust gases, and cause improper operation of the fireplace.

5. Determine the length of the vent needed, allowing slightly more vent then required. Stretch the inner and outer flex vent out to 48 inches, then, trim off the extra length of vent not needed. **NOTICE:** If the venting is too long, trim off the excess venting as needed, however, make sure you leave enough extra to make the connections at the termination cap.
6. Locate the inner flex vent which has a pre-assembled flue collar connector and attach the spacer springs by interlocking the end of the springs about 2 inches. The springs should be spaced evenly apart starting at 12 inches from the fireplace flue collar. **See Figure 72.**

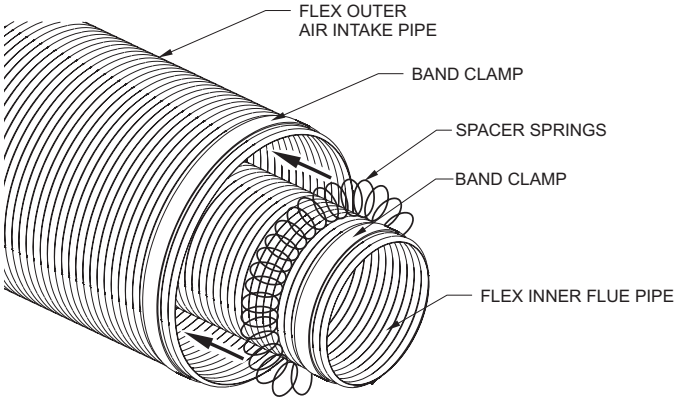

Figure 72

NOTICE: Silicone sealant must be rated for 1000°F or higher.

7. Attach the flex flue (non-connector end) to the Termination Cap. Use silicone sealant on connection, and secure with the 4 inch dia band clamp.
8. Slip the outer flex vent over the inner flex flue (with spacer springs), then secure the Inlet Flex vent to the Termination Cap. Use silicone sealant on connection, and secure with a 7 inch dia band clamp.
9. Feed the Flex pipe (with cap attached) through the wall thimble assembly from the outside.
10. Secure the termination cap to the house exterior using four 1/8 x 3 inch long screws. Be sure to install the Deflector Shield with the two screws at the top of the termination base. **See Figure 73.**

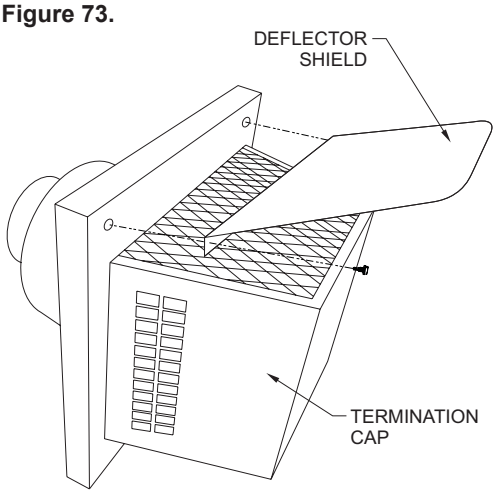

Figure 73

11. Add sealant to the flue adapter collar, (SD46DVA-FCFX7 sold separately) then insert the adapter collar to the flue collar on the fireplace. Secure the flue vent collar using four #6 x 1/2 inch self tapping screws provided.
12. Feed the outer flex vent over the inner flex flue vent and secure to the 7 inch dia. fireplace collar. Tighten the band clamp, then seure the clamp to the fireplace with (4) evenly spaced #6 x 1/2 inch self tapping screws provided.
13. With the fireplace secured, check to make sure that the required rise (1/4 inch per feet.) of the vent is maintained from the fireplace and upward through the thimble assembly and termination cap.

NOTICE

Do not force the Horizontal Vent Termination into the flex venting. Always stretch out the venting first, and cut off excess vent material. Forcing the termination cap into the flex venting will deform the flue venting, which will restrict the exhaust gases, and cause improper operation of the fireplace.

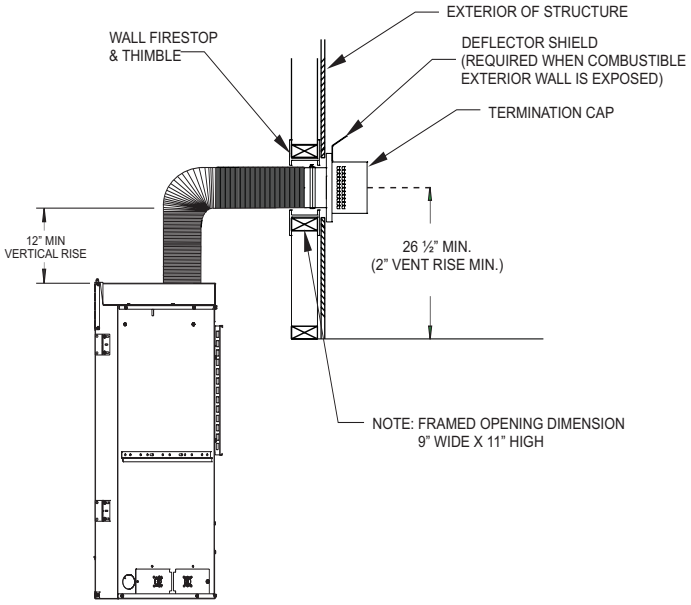

Figure 74

MILLIVOLT STANDING PILOT LIGHTING INSTRUCTIONS (BP3 SERIES)

FOR YOUR SAFETY READ BEFORE LIGHTING

⚠ WARNING

If you do not follow these instructions exactly, a fire or explosion may result causing property damage, personal injury or loss of life.

A. This appliance has a pilot which must be lighted by hand. When lighting the pilot, follow these instructions exactly.

B. Before lighting smell all around the appliance area for gas. Be sure to smell next to the floor because some gas is heavier than air and will settle on the floor.

What To Do If You Smell Gas
- Do not try to light any appliance.
- Do not touch any electrical switch;
- Do not use any phone in your building.
- Immediately call your gas supplier from a neighbor's phone. Follow the gas supplier's instructions.
- If you cannot reach your gas supplier, call the fire department.

C. Use only your hand to push in or turn the gas control knob. Never use tools. If the knob will not push in or turn by hand, don't try to repair it; call a qualified service technician. Force or attempted repair may result in a fire or explosion.

D. Do not use this appliance if any part has been under water. Immediately call a qualified service technician to inspect the appliance and to replace any part of the control system and any gas control which has been under water.

LIGHTING INSTRUCTIONS

1. Stop! Read the safety information above.
2. Set REMOTE/OFF/ON switch to OFF.
3. Turn off all electric power to the appliance (if applicable).
4. Remove barrier screen.
5. Push in gas control knob slightly and turn clockwise to "OFF."
   NOTICE: Knob cannot be turned from "PILOT" to "OFF" unless knob is pushed in slightly. Do not force.
6. Wait ten minutes to clear out any gas. Then smell for gas, including near the floor. If you then smell gas, STOP! Follow "B" in the safety information above. If you do not smell gas, go to the next step.
7. Find pilot - Follow metal tube from gas control. The pilot is behind the burner on the right side.
8. Turn gas control knob counterclockwise to "PILOT."
9. Push in control knob all the way and hold in. Repeatedly push the piezo ignitor button until the pilot is lit. Continue to hold the control knob in the for about one minute after the pilot is lit. Release knob, and it will pop back up. Pilot should remain lit. If it goes out, repeat steps 5 through 9.
   - If the control knob does not pop up when released, STOP and IMMEDIATELY call a qualified service technician or gas supplier.
   - If the pilot will not stay lit after several tries, turn the gas control knob to "OFF" and call your service technician or gas supplier.
10. Turn gas control knob counterclockwise to "ON."
11. Replace barrier screen.
12. Turn on all electric power to the appliance (if applicable).
13. Set REMOTE/OFF/ON switch to desired setting.

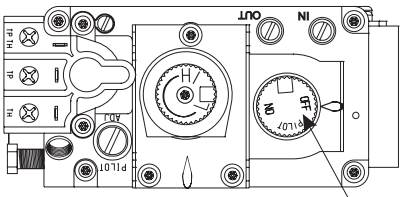

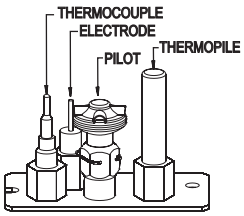

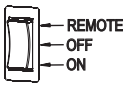

TO TURN OFF GAS TO FIREPLACE

1. Turn off all electric power to the appliance if service is to be performed (if applicable).
2. Remove barrier screen.
3. Set REMOTE/OFF/ON switch to OFF.
4. Push in gas control knob slightly and turn clockwise to "OFF." Do not force.
5. Replace barrier screen.

Figure 75

MILLIVOLT OPERATING INSTRUCTIONS (BP3 SERIES)

Millivolt System

The standing pilot burns continuously even when the main burner is OFF. When you ignite the pilot, the thermopile produces millivolts (electrical current) which energizes the magnet in the gas valve. After 30 seconds you can release the gas control knob and the pilot will stay ON. Allow the pilot flame to burn an additional one to two minutes before you turn the gas control knob from the PILOT position to the ON position. This allows current millivolt build-up to a sufficient level to operate the gas control properly.

1. Follow the SAFETY and LIGHTING INSTRUCTIONS for standing pilot controls found in this manual and on labels found in control compartment behind the barrier screen.

⚠ CAUTION

During the initial purging and subsequent lightings, never allow the gas valve control knob to remain depressed in the "pilot" position without pushing the piezo ignitor button at least once every second.

2. During the operating season, leave the control valve knob in the "ON" position. This will allow the pilot flame to remain lit. Turn the burner flame on or off with the fireplace REMOTE OFF/ON switch, wall switch or remote controls.

NOTICE: The gas control valve allows you to increase or decrease the height of the main burner flame. The control valve has a pressure regulator with a knob as shown in **Figure 76.** Rotate the knob clockwise to "HI" to increase the flame height and counterclockwise to "LO" to decrease the flame height.

3. When the heating season ends, turn the REMOTE OFF/ON switch to "OFF" and the control valve to "OFF". The system, including the pilot light, will shut down.

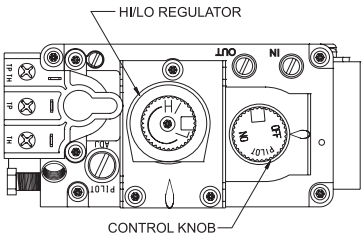

Figure 76

The OWNER should carefully read and follow these operating instructions.

Initial Lighting

Remove the barrier screen assembly to view the gas controls for the fireplace. Upon turning the gas valve on after it has been in the "OFF" position, a small amount of air will be in the lines. When first lighting the fireplace, it will take a few minutes for the lines to purge this air. Once the purging is complete, the fireplace will light and operate satisfactorily.

Subsequent lightings of the fireplace will not require purging if the gas valve is not turned to "OFF."

Pilot Flame

The pilot flame should cover the thermopile and thermocouple.

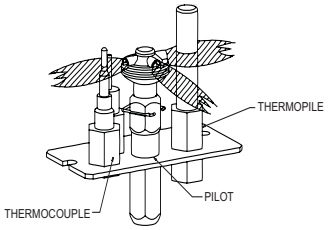

Figure 77

STANDING PILOT OPERATING INSTRUCTIONS

REMOTE OFF/ON SWITCH

The fireplace is equipped with a REMOTE OFF/ON switch. A wire harness is attached to the REMOTE OFF/ON switch. The red, black and green (wires) female push-ons attach to the REMOTE OFF/ON switch. At the opposite end of the wire harness, the black and green (wires) female push-ons attach to the gas valve. An additional green wire and the red wire, which are stripped and bare, will attach to one of the control accessories (purchase separately).

Operation of REMOTE OFF/ON SWITCH with no Accessories

To ignite main burner, turn the control knob on the gas valve from the PILOT position to the ON position. Turn the REMOTE/OFF/ON switch from the OFF position to the ON position. The additional green wire and red wire, which are stripped and bare are not used.

Wall Switch, FWS-1

Connect the green and red wires, stripped and bare, on the wire harness to the wall switch. Turn the REMOTE OFF/ON switch to the REMOTE position. Pivot the rocker switch on the FWS-1 to the ON position.

Wall Thermostats (optional)

TRW - Wireless for Millivolt models

TMV - Reed switch for Millivolt models

Battery-Operated Remote Controls, FRBC, FRBTC, and TRW

Connect the green and red wires on the wire harness to the remote receiver. Turn the REMOTE OFF/ON switch to the REMOTE position. Follow instructions included with the remote to complete installation.

NOTICE: If batteries fail in the remote, and immediate heat is desired, turn the REMOTE OFF/ON switch from the REMOTE position to the ON position.

Installation of Remote Receiver

Place remote receiver on the floor of fireplace behind the barrier screen assembly as far forward as possible.

NOTICE: The Velcro loop and hook are not necessary in this installation but can be used to secure remote receiver.

Refer to remote control installation and operating instructions for more details on remote control.

Millivolt Control

The valve regulator controls the burner pressure which should be checked at the pressure test point. Turn captured screw counter clockwise 2 or 3 turns and then place tubing to pressure gauge over test point (Use test point "A" closest to control knob). After taking pressure reading, be sure to turn captured screw clockwise firmly to re-seal. Do not over torque. Check for gas leaks.

Millivolt thermopile is self generating. Gas valve does not require 24 volts or 110 volts.

Check System Operation

Millivolt system and all individual components may be checked with a millivolt meter 0-1000 MV range.

Use wire of a gauge proper for the length of the wire:

RECOMMENDED WIRE GAUGES	
Maximum Length (feet)	**Wire Gauge**
1 to 10	18
10 to 25	16
25 to 35	14

MILLIVOLT STANDING PILOT TROUBLESHOOTING (BP3 SERIES)

With proper installation and maintenance, your new Direct-Vent Gas Fireplace will provide years of trouble-free service. If you do experience a problem, refer to the Troubleshooting Guide below. This guide will assist a qualified service person in diagnosis and corrective action.

1. **Spark ignitor will not light pilot after repeated triggering of piezo ignitor button.**
   a. Defective ignitor (no spark electrode)
   —Check for spark at electrode and pilot; if no spark and electrode wire is properly connected, replace ignitor.
   b. No gas or low gas pressure.
   —Check remote shut off valves from fireplace. Usually there is a valve near the main. There can be more than one valve between the fireplace and main.
   —Low pressure can be caused by a variety of situations such as a bent line, too narrow diameter of pipe, or low line pressure. Consult with plumber or gas supplier.
   c. No LP in tank.
   —Check LP (propane) tank. Refill tank.
2. **Pilot will not stay lit after carefully following lighting instructions.**
   a. Defective thermocouple.
   —Check that pilot flame impinges on thermocouple. Clean and/or adjust pilot for maximum flame impingement.
   —Ensure the thermocouple connection at the gas valve is fully inserted and tight (hand tight plus 1/4 turn). Faulty thermocouple if reading is below specified minimum of 15 millivolts.
   —Disconnect the thermocouple from the valve, place one millivolt meter lead wire on the end of the thermocouple and the other millivolt meter lead wire on the thermocouple copper wire. Start the pilot and hold the valve knob in. If the millivolt reading is less than 15 millivolt, replace the thermocouple.
   b. Defective valve.
   —If thermocouple is producing more than 15 millivolts, replace faulty valve.
3. **Pilot burning, no gas to burner, valve knob "ON", REMOTE/OFF/ON switch "ON."**
   a. REMOTE/OFF/ON switch, wall switch, remote control or wires defective.
   —Check REMOTE/OFF/ON switch and wires for proper connections. Place jumper wires across terminal at switch. If burner comes on, replace defective switch. If OK, place jumper wires across switch wires at gas valve-if burner comes on, wires are faulty or connections are bad.
   b. Thermopile may not be generating sufficient millivolts.
   —If the pilot flame is not close enough physically to the thermopile, adjust the pilot flame.
   —Be sure the wire connections from the thermopile at the gas valve terminals are tight and the thermopile is fully inserted into the pilot bracket.
   —Check the thermopile with a millivolt meter. Take the reading at TH-TP & TP terminals of the gas valve. The meter should read 350 millivolts minimum, while holding the valve knob depressed in the PILOT position, with the pilot lit, and the REMOTE/OFF/ON switch in the OFF position. Replace the faulty thermopile if the reading is below the specified minimum.
   —With the pilot in the ON position, disconnect the thermopile leads from the valve. Take a reading at the thermopile leads. The reading should be 350 millivolts minimum. Replace the thermopile if the reading is below the minimum.
   c. Defective valve.
   —Turn valve knob to ON. Place REMOTE/OFF/ON switch to ON. Check with millivolt meter at thermopile terminals. Millivolt meter should read greater than 200 millivolts. If the reading is okay and the main burner does not ignite, replace the gas valve.
   d. Plugged main burner orifice.
   —Check main burner orifice for blockage and remove.
4. **Frequent pilot outage problem.**
   a. Pilot flame may be too high or too low, or blowing (high), causing pilot safety to drop out.
   —Clean and adjust flame for maximum flame impingement on the thermocouple. Follow lighting instructions carefully.
5. **The pilot and main burner extinguish while in operation.**
   a. No LP (Propane) in tank.
   —Check LP (Propane) tank. Refill fuel tank.
   b. Inner vent pipe leaking exhaust gases back into system
   —Check for leaks.
   c. Door not installed correctly, gasket leaks in corners after usage.
   —Be certain door is installed correctly.
   d. Horizontal vent improperly pitched.
   —The horizontal vent cap should slope down only enough to prevent any water from entering the unit. The maximum downwards slope is 1/4 inch.
   e. Bad thermopile or thermocouple.
   —Replace if necessary.
   f. Improper vent cap installation.
   —Check for proper installation and freedom from debris or blockage.
6. **Glass soots.**
   a. Flame impingement on logs.
   —Check and adjust log position. Contact Empire Comfort Systems, Inc.
   b. Debris around throat of main burner.
   —Inspect the opening at the base of the main burner. It is imperative that NO material be placed in this opening.
7. **Flame burns blue and lifts off main burner.**
   a. Insufficient oxygen being supplied.
   —Check to make sure vent cap is installed properly and free of debris. Make sure that vent system joints are tight and have no leaks.
   —Check to make sure that no material has been placed at the main burner base.

INTERMITTENT PILOT LIGHTING INSTRUCTIONS (BP7 SERIES)

FOR YOUR SAFETY READ BEFORE LIGHTING

⚠ WARNING

If you do not follow these instructions exactly, a fire or explosion may result causing property damage, personal injury or loss of life.

A. This appliance has a pilot which can be lighted with the manual on/off switch, a remote control, or by switching the receiver switch to the "ON" position. When lighting the pilot, follow these instructions exactly.

B. BEFORE LIGHTING smell all around the appliance area for gas. Be sure to smell next to the floor because some gas is heavier than air and will settle on the floor.

What To Do If You Smell Gas
- Do not try to light any appliance.
- Do not touch any electrical switch;
- Do not use any phone in your building.
- Immediately call your gas supplier from a neighbor's phone. Follow the gas supplier's instructions.
- If you cannot reach your gas supplier, call the fire department.

C. Use only the remote control or manual remote receiver switch to operate the gas valve. Never use tools. If valve does not operate, don't try to repair it, call a qualified service technician. Force or attempted repair may result in a fire or explosion.

D. Do not use this appliance if any part has been under water. Immediately call a qualified service technician to inspect the appliance and to replace any part of the control system and any gas control which has been under water.

LIGHTING INSTRUCTIONS

1. **STOP!** Read the safety information above.
2. Turn OFF electric power to the appliance.
3. Remove barrier screen.
4. Turn gas supply knob counterclockwise to "On" position.
5. Wait ten minutes to clear out any gas. Then smell for gas, including near the floor. If you smell gas, **STOP!** Follow "B" in the safety information above on this page. If you do not smell gas, go to the next step.
6. Turn ON electric power to the appliance.
7. Find pilot - The pilot is behind the burner on the left side.
8. Turn main flame to on. If the pilot does not light within 60 seconds, stop and go to Step 5.
9. Refer to remote control instructions for detailed information, control features, and operation. **NOTICE:** There is a CPI/IPI switch that allows for a continuous standing pilot mode or an intermittent pilot mode. See appliance manual for location of this switch. If the pilot or burner does not stay lit (in the standing pilot mode), stop and immediately call a qualified service technician or gas supplier.
10. If the burner or pilot does not operate properly after several tries, turn the gas supply knob clockwise to "OFF" and call your service technician or gas supplier.
11. Replace barrier screen.
12. Operation of the gas valve is controlled by a manual on/off switch or a hand held remote control. Refer to remote instructions for detailed operation information.

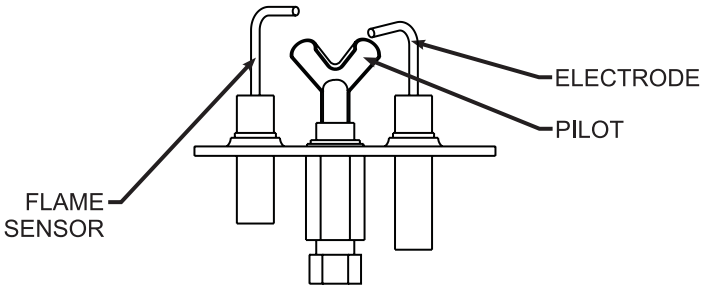

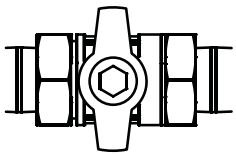

OFF

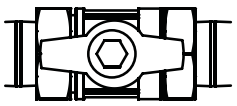

ON

TO TURN OFF GAS TO FIREPLACE

1. Turn off all electric power to the appliance if service is to be performed (if applicable).
2. Gain access to control compartment. Remove barrier screen.
3. Locate On/Off gas supply knob and turn clockwise to "OFF". Do not force.
4. Replace barrier screen.

IPI ELECTRONIC SYSTEM OPERATING INSTRUCTIONS (BP7 SERIES)

ELECTRONIC CONTROL VALVE

The electronic control valve system includes the ability to switch the pilot from a standing pilot mode to an intermittent pilot mode.

- **IPI Mode** - In the Intermittent Pilot mode, when the unit is turned ON, it will cause spark to the pilot, light the pilot, then allow the burner to light. When the unit is turned to OFF, both the burner and pilot will be OFF.
- **CPI Mode** - In the Continuous Pilot mode, the pilot remains ON continuously even when the burner is turned OFF.

NOTICE: A small toggle switch on the front of the module tray that is used to switch from IPI (left) to the CPI (right). **See Figure 78.**

When the unit is turned to ON, the electrical current will energize a spark to the pilot igniter. Once the pilot sensor heats up (after a few seconds), the valve will be energized, allowing gas to flow to the burner.

1. Follow the SAFETY and LIGHTING INSTRUCTIONS for Intermittent Pilot controls found in this manual, and on labels found in the control compartment located in the lower cavity of the appliance.
2. During the heating season (or in power outage periods), it is recommended that the pilot remain in the CPI (standing pilot mode) to reduce cold start issues, and/or conserve battery backup power during a power outage.
3. The gas valve has inlet and outlet pressure taps as shown in **Figure 78.** Refer to pages 8 and 17 for gas pressure requirements.

NOTICE: The gas control has a manual HI/LO flame adjustment knob (regulator) that allows you to increase or decrease the height of the burner flame. **See Figure 78.** Rotate the HI/LO knob counterclockwise to “HI” to increase the flame height, and clockwise to “LO” to decrease the flame height.

OPTIONAL REMOTE CONTROLS

Optional remote controls are available for use with this appliance. It is recommended that the remote receiver be placed either in a wall outlet box with extended wiring, or in the control compartment area as far forward as possible.

The placement options for the remote receiver are given to allow flexibility, however battery life will be extended when the receiver is placed in cooler areas.

To connect the remote receiver to the appliance, first disconnect the ON/OFF switch wires from the white and green wire connectors and connect the wires from the remote receiver to the green and white wire connectors. **See Figure 78.**

Follow the instructions included with the remote control for programming and other operational information.

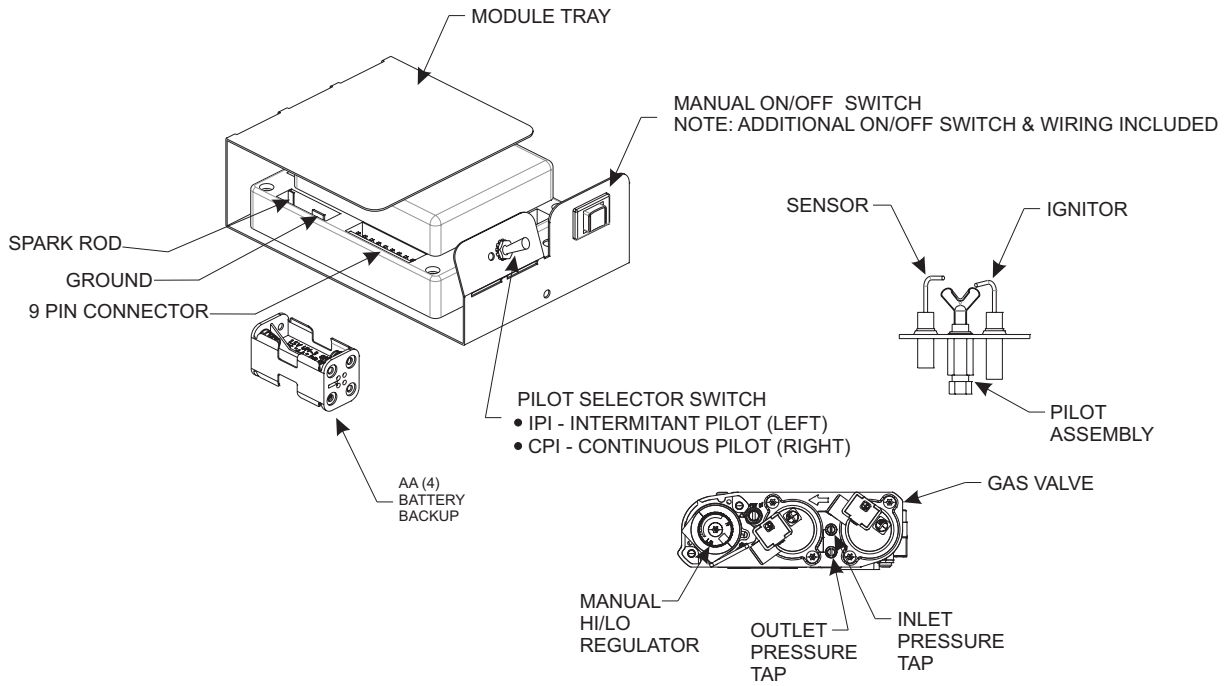

Figure 78

INTERMITTENT PILOT CONTROL SYSTEM TROUBLESHOOTING

PROBLEM OBSERVED	POSSIBLE CAUSE	CORRECTIVE MEASURE
Gas odor during setup	Gas Leak	See “What to do if you smell gas” Page 1.
		Check all gas connections. Tighten all loose connections.
Gas odor before first ignition	Gas Leak	See “What to do if you smell gas” Page 1.
		Check all gas connections. Tighten all loose connections.
Fireplace is “on” but no flame and pilot is not trying to light	Gas Line Valve turned “off”	Turn shutoff valve to “open” position
	Control module in “lockout”	Turn fireplace “off” and then back “on”
Pilot continues to spark when pilot is lit.	Not enough gas to pilot	Wait for pilot flame to strengthen
	Low Gas Pressure	Check pressures. See page 8.
	Pilot igniter/sensor is dirty	Clean pilot.
	Pilot not grounded well	Check ground connections
	Draft in firebox	Redirect draft from room or wall
	Pilot sensor has been bent	Replace pilot
Pilot will not ignite, or will not stay lit	Pilot igniter/sensor is dirty	Clean flame sensor and pilot igniter.
	Pilot not grounded well	Check ground connections
	Sensor Wire loose	Check sensor wire terminals
	Gas pressure incorrect	Adjust gas pressure
	Pilot Gas Line bent or kinked	Replace pilot tube
	Faulty pilot, Sensor bent	Replace Pilot
	Faulty valve	Replace Valve
Burner takes too long to fully light	Low gas pressure	Check gas supply pressure
	Clogged or dirty carryover/burner ports	Clean ports
	Blocked orifice	Check orifice opening
	Faulty valve	Replace valve
Burner does not light but pilot remains on	Low gas pressure	Check gas supply pressure
	Clogged or dirty burner ports	Clean burner ports
	Blocked orifice	Check orifice opening
	Loose wire connections	Check valve/control module connections
	Faulty pilot	Replace pilot
	Faulty valve	Replace valve

INTERMITTENT PILOT CONTROL SYSTEM TROUBLESHOOTING (CONT'D)

PROBLEM OBSERVED	POSSIBLE CAUSE	CORRECTIVE MEASURE
Burner lights but does not stay lit while pilot remains on	Low gas pressure	Check gas supply pressure
	Loose sensor wire	Check wire connection
	Faulty valve	Replace valve
	Faulty pilot or thermocouple	Replace Safety pilot
	Clogged or dirty burner ports	Clean burner ports
	(For fireplace equipped with optional thermostat or thermostat remote) Room temperature is higher than thermostat setting	Move (optional) remote away from fireplace
		Set higher temperature on (Optional) remote/thermostat
Burner & pilot light but will not stay lit	Flame sensor dirty	Clean pilot sensor
	Low gas pressure	Check gas supply pressure
	Not enough fresh air for pilot	Open door or window - ventilate
	Clogged or dirty burner ports	Clean burner ports
	(For fireplace equipped with optional thermostat or thermostat remote) Room temperature is higher than thermostat setting	Move (optional) remote away from fireplace
		Set higher temperature on (Optional) remote/thermostat
	Faulty pilot or thermocouple	Replace pilot
Incorrect burner flame	Incorrect gas supply or pressure	Check gas supply pressure
	Blocked orifice	Check orifice opening
	Clogged or dirty burner ports	Clean burner ports
	Faulty valve	Replace valve
	High altitude	Adjust orifice size for altitude
Backfire of burner	Blocked orifice	Check orifice opening
	Clogged or dirty burner ports	Clean burner ports
	Low gas pressure	Check gas supply pressure
Appliance produces unwanted odors	Vapors from paint, hairspray, glue, etc.	Ventilate room until odor stops. Do not use paint, hairspray, glue, etc around fireplace
	Initial burn-off of manufacturing chemicals	Ventilate room until odor stops
Whistle noise from appliance	Check gas pressure	Adjust gas pressure to recommended setting.
	Air in gas line	Bleed lines
	Control knob not in fully open position	Open control knob to full position
	Spiral gas flex line pinched or too small diameter line	Straighten flex line where pinched or replace gas feed line with larger diameter

MILLIVOLT PARTS VIEW - DVCC(32,36,42)BP3

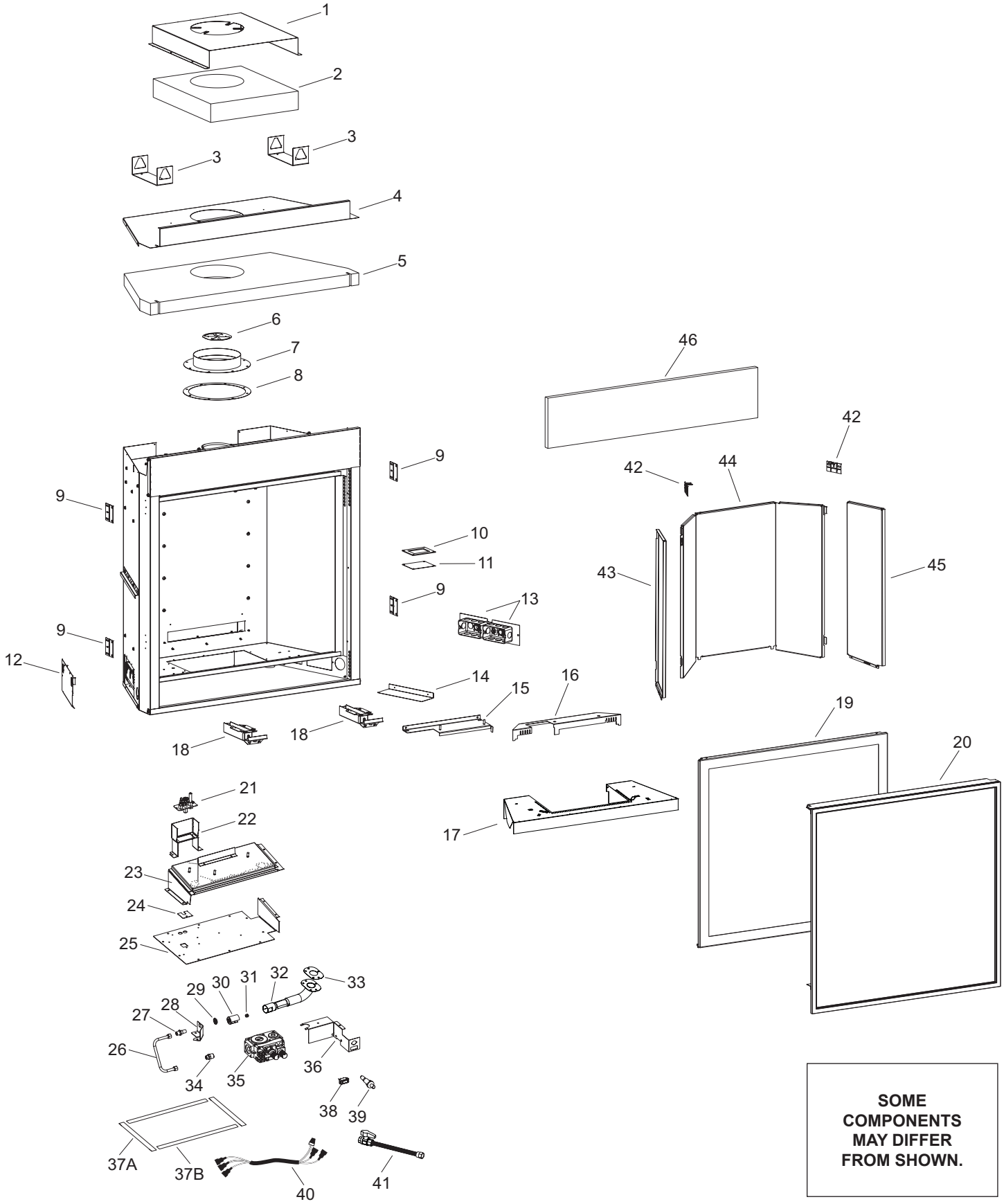

SOME COMPONENTS MAY DIFFER FROM SHOWN.

MILLIVOLT PARTS LIST - DVCC(32,36,42)BP3

INDEX NO.	PART NUMBER			DESCRIPTION
	DVCC32	DVCC36	DVCC42	
1	35918	35918	35918	INSULATION BOX
2	R12177	R12177	R12177	INSULATION TOP, CENTER
3	35997	35997	35997	BRACKET, SHIPPING (QTY. 2)
4	35894	35901	35908	OUTER WRAPPER TOP
5	R12174	R12175	R12176	INSULATION TOP
6	32730	32730	32730	FLUE RESTRICTOR ASSEMBLY
7	R7566	R7566	R7566	INLET VENT ADAPTER 6-5/8
8	R7573	R7573	R7573	GASKET, INLET VENT
9	31579	31579	31579	NAILING FLANGE (QTY. 4)
10	R11751	R11751	R11751	GASKET, ACCENT LAMP
11	32214	32214	32214	COVER PLATE, ACCENT LIGHT
12	31587	31587	31587	BLOWER MOUNTING PLATE
13	17162	17162	17162	JUNCTION BOX ASSEMBLY (QTY. 2)
14	17357	17357	17357	JUNCTION BOX SHIELD
15	32767	32767	32768	LOG SUPPORT ASSEMBLY
16	31606	31625	31709	MODERN COVER
17	37597	37598	37599	BURNER COVER
18	29057	29057	29057	SPRING RETAINER ASSEMBLY (QTY. 2)
19	31939	31940	32256	GLASS FRAME ASSEMBLY
20	37600	37595	37596	SCREEN ASSEMBLY COMPLETE
21	R7612	R7612	R7612	PILOT ASSEMBLY, NAT
21	R7611	R7611	R7611	PILOT ASSEMBLY, LPG
22	31600	31600	31600	PILOT BRACKET
23	37591	37591	37592	BURNER WELDED ASSEMBLY
24	11269	11269	11269	GAS LINE BRACKET
25	31599	31599	31786	BURNER BASE
26	31785	31785	31785	TUBING ASSEMBLY, INLET
27	R11675	R11675	R11675	ORIFICE HOLDER
28	31714	31714	31714	ORIFICE BRACKET
29	R7572	R7572	R7572	JAMB NUT, 1/4-in-18 NPS
30	R7624	R7624	R7624	AIR SHUTTER
31	P204	N/A	N/A	ORIFICE #54 LP

INDEX NO.	PART NUMBER			DESCRIPTION
	DVCC32	DVCC36	DVCC42	
31	P286	P286	N/A	ORIFICE #42 NAT
31	N/A	P208	N/A	ORIFICE #1.45mm LP
31	N/A	N/A	P258	ORIFICE #1.55mm LP
31	N/A	N/A	P323	ORIFICE #2.45mm NAT
32	R11978	R11978	R11978	VENTURI
33	R11977	R11977	R11977	VENTURI GASKET
34	R2423	R2423	R2423	CONNECTOR, MALE 5/16 X 3/8 NPT
35	R7577	R7577	R7577	VALVE, NAT
35	R7578	R7578	R7578	VALVE, LPG
36	31595	31595	31595	VALVE BRACKET
37A	17626	17626	17626	GASKET 3/4 X 7 (QTY. 2)
37B	17625	17625	17625	GASKET 3/4 X 13 3/4 (QTY. 2)
38	R3436	R3436	R3436	SWITCH, REMOTE OFF/ON
39	R9760	R9760	R9760	IGNITOR, PIEZO
40	R10947	R10947	R10947	WIRE ASSEMBLY
41	R7591	R7591	R7591	FLEXLINE 3/8 X 12 WITH SHUTOFF
42	29270	29270	29270	LINER BRACKET (QTY. 2)
43	31607BL	31607BL	31710BL	LEFT SIDE LINER
44	31605BL	31624BL	31708BL	REAR LINER
45	31608BL	30608BL	31712BL	RIGHT SIDE LINER
46	36071	36072	36073	NON-COMBUSTIBLE BOARD
NS	36094	36094	36094	BACKER STUD (QTY. 4)
NS	R3491	R3491	R3491	COVER, JUNCTION BOX
NS	R3492	R3492	R3492	RECEPTICAL, 3-PRONG

NS - Part Not Shown on Exploded View
N/A - Part not applicable for that particular unit.

⚠ WARNING

Use only manufacturer's replacement parts. Use of any other parts could cause injury or death.

IP PARTS VIEW - DVCC(32,36,42)BP7

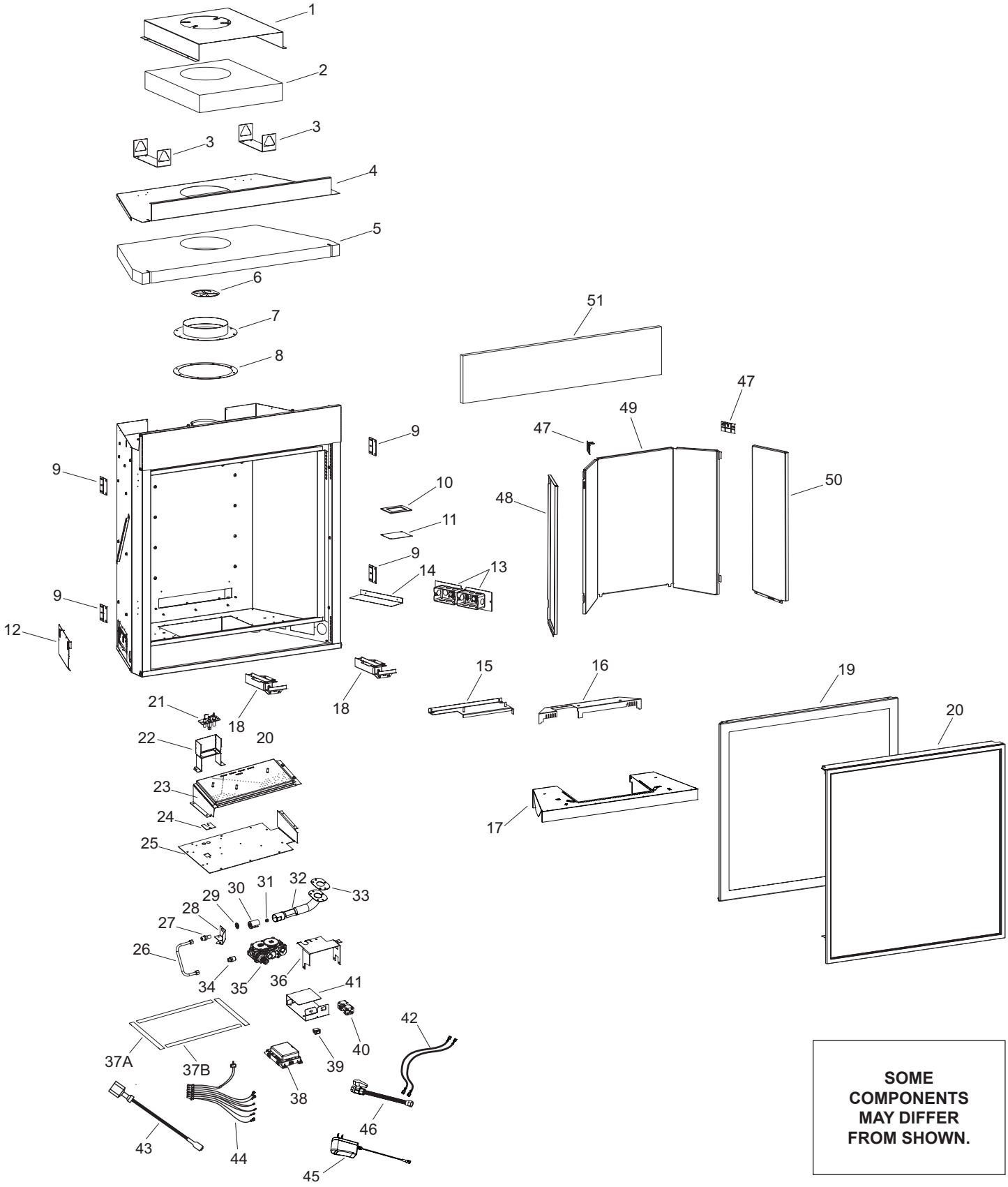

SOME COMPONENTS MAY DIFFER FROM SHOWN.

IP PARTS LIST - DVCC(32,36,42)BP7

INDEX NO.	PART NUMBER			DESCRIPTION
	DVCC32	DVCC36	DVCC42	
1	35918	35918	35918	INSULATION BOX
2	R12177	R12177	R12177	INSULATION TOP, CENTER
3	35997	35997	35997	BRACKET, SHIPPING (QTY. 2)
4	35894	35901	35908	OUTER WRAPPER TOP
5	R12174	R12175	R12176	INSULATION TOP
6	32730	32730	32730	FLUE RESTRICTOR ASSEMBLY
7	R7566	R7566	R7566	INLET VENT ADAPTER 6-5/8
8	R7573	R7573	R7573	GASKET, INLET VENT
9	31579	31579	31579	NAILING FLANGE (QTY. 4)
10	R11751	R11751	R11751	GASKET, ACCENT LAMP
11	32214	32214	32214	COVER PLATE, ACCENT LIGHT
12	31587	31587	31587	BLOWER MOUNTING PLATE
13	17162	17162	17162	JUNCTION BOX ASSEMBLY (QTY. 2)
14	17357	17357	17357	JUNCTION BOX SHIELD
15	32767	32767	32768	LOG SUPPORT ASSEMBLY
16	31606	31625	31709	MODERN COVER
17	37597	37598	37599	BURNER COVER
18	29057	29057	29057	SPRING RETAINER ASSEMBLY (QTY. 2)
19	31939	31940	32256	GLASS FRAME ASSEMBLY
20	37600	37595	37596	SCREEN ASSEMBLY COMPLETE
21	R10423	R10423	R10423	PILOT ASSEMBLY, NAT
21	R10424	R10424	R10424	PILOT ASSEMBLY, LPG
22	31600	31600	31600	PILOT BRACKET
23	37591	37591	37592	BURNER WELDED ASSEMBLY
24	11269	11269	11269	GAS LINE BRACKET
25	31599	31599	31786	BURNER BASE
26	31785	31785	31785	TUBING ASSEMBLY, INLET
27	R11675	R11675	R11675	ORIFICE HOLDER
28	31714	31714	31714	ORIFICE BRACKET
29	R7572	R7572	R7572	JAMB NUT, 1/4-in-18 NPS
30	R7624	R7624	R7624	AIR SHUTTER
31	P204	N/A	N/A	ORIFICE #54 LP

INDEX NO.	PART NUMBER			DESCRIPTION
	DVCC32	DVCC36	DVCC42	
31	P286	P286	N/A	ORIFICE #42 NAT
31	N/A	P208	N/A	ORIFICE #1.45mm LP
31	N/A	N/A	P258	ORIFICE #1.55mm LP
31	N/A	N/A	P323	ORIFICE #2.45mm NAT
32	R11978	R11978	R11978	VENTURI
33	R11977	R11977	R11977	VENTURI GASKET
34	R2423	R2423	R2423	CONNECTOR, MALE 5/16 X 3/8 NPT
35	R11125	R11125	R11125	VALVE, NAT
35	R11126	R11126	R11126	VALVE, LPG
36	31926	31926	31926	VALVE BRACKET
37A	17626	17626	17626	GASKET 3/4 X 7 (QTY. 2)
37B	17625	17625	17625	GASKET 3/4 X 13 3/4 (QTY. 2)
38	R11127	R11127	R11127	CONTROL BOARD, PROFLAME DFC
39	R2522	R2522	R2522	SWITCH, ON/OFF
40	R11122	R11122	R11122	BATTERY HOLDER, AA WITH SNAP-ON
41	29382	29382	29382	MODULE TRAY
42	R2566	R2566	R2566	WIRE ASSEMBLY (QTY. 2)
43	R11034	R11034	R11034	WIRE ASSEMBLY, ORANGE
44	R11123	R11123	R11123	WIRE HARNESS, PROFLAME DFC
45	R11128	R11128	R11128	POWER ADAPTOR, 7.0 VDC
46	R7591	R7591	R7591	FLEXLINE 3/8 X 12 WITH SHUTOFF
47	29270	29270	29270	LINER BRACKET (QTY. 2)
48	31607BL	31607BL	31710BL	LEFT SIDE LINER
49	31605BL	31624BL	31708BL	REAR LINER
50	31608BL	30608BL	31712BL	RIGHT SIDE LINER
51	36071	36072	36073	NON-COMBUSTIBLE BOARD
NS	36094	36094	36094	BACKER STUD (QTY. 4)
NS	R3491	R3491	R3491	COVER, JUNCTION BOX (QTY. 2)
NS	R3492	R3492	R3492	RECEPTICAL, 3-PRONG

NS - Part Not Shown on Exploded View
N/A - Part not applicable for that particular unit.

⚠ WARNING

Use only manufacturer's replacement parts. Use of any other parts could cause injury or death.

MAINTENANCE AND SERVICE

NOTICE: It is normal for steel appliances to give off some expansion and/or contraction noise during start up or cool-down. Similar noises are found with your furnace heat exchanger or car engine.

It is normal for your gas fireplace to give off some odor the first time it is burned. This is due to the curing of the paint and any undetected oil from the manufacturing process.

Please ensure that your room is well ventilated during initial warming - open a window.

Burn your fireplace for at least six hours the first time you use it. If optional fan kit has been installed, place fan control in the “OFF” position during this time.

IMPORTANT: Turn off gas before servicing appliance. Have a qualified service person perform these check-ups at the beginning of each heating season.

- **Clean Burner and Control Compartment**
  Keep the control compartment, logs, and burner areas surrounding the logs clean by vacuuming or brushing at least twice a year.

Maintenance and Service
The only recommended maintenance for the homeowner is periodically cleaning the glass. Before cleaning the glass read the warnings below.

This fireplace has no user-serviceable mechanical components. Contact your dealer or a qualified gas appliance service technician for all service and repair.

⚠ WARNING

- **Handle the glass with care to avoid breaking it. Never strike the glass.**
- **To prevent etching or discoloring, clean the glass with Fireplace Glass Cleaner (available from your dealer). Never use cleaners that contain ammonia or abrasives.**
- **Never clean the glass while it is hot or even warm. Touching hot glass can cause severe burns. Using liquids or aerosols on hot glass will cause it to shatter.**
- **Never operate the fireplace with the glass removed or cracked.**
- **Have your dealer replace damaged glass only with glass and gasket material from Empire Comfort Systems. Using substitute glass will void the warranty.**

Glass Cleaning Procedure
Turn off the fireplace and allow it to cool for at least an hour. Wear clean protective gloves when handling the glass door to prevent injury to your hands and avoid leaving smudges.

1. Remove the barrier screen by lifting and pulling towards you.
2. Turn off gas valve.
3. Use a feather duster or soft cloth to remove any accumulated dust in the bottom of fireplace and around valve. Avoid disturbing any wiring or metal tubing.
4. Locate the two spring clamps at the bottom of the glass frame. Pull out and downward to release them.
5. Remove the glass front by swinging the bottom outward. Hold the frame at the sides and gently lift up.
6. Clean the glass inside and out using a product specifically designed for fireplace glass. (Do not use glass cleaner that contains ammonia.)
7. Reinstall glass front by hanging the top of the frame on top of the firebox, making sure the gasket at the top is positioned in front of the firebox flange and not on top **See Figure 78.**
8. Gently lower the glass into position and secure with the two latches at the bottom.
9. Wipe off any smudges on the glass or frame. (Heat from the fireplace can cause residue on the frame to discolor the finish.)
10. Ignite the pilot. **(See Lighting Instructions.)**
11. Replace the barrier screen by hanging the top flange on the door and swinging the bottom down. Adjust, if necessary, to sit squarely in the fireplace opening.
12. Light the fireplace and let it burn for 5 minutes. If either the pilot or the flames appear abnormal, contact your dealer.

- **Check Vent System**
  The appliance and venting system should be inspected before initial use and at least annually by a qualified service person. Inspect the external vent cap on a regular basis to make sure that no debris is interfering with the air flow.

General Glass Information

⚠ WARNING

Do not operate appliance with the glass front removed, cracked or broken.

Only glass approved for use by the manufacturer in fireplace may be used for replacement. Glass replacement should be done by a licensed or qualified service person.

Make periodic visual check of pilot and burners. Clean and replace damaged parts.

Additional maintenance and service checklist is provided on Page 54 for the service technician. These are only to be completed by a service technician.

Glass Door & Barrier Screen Removal

NOTICE: Do not handle barrier screen or door with your bare hands! (Always Wear Gloves)

1. Remove the barrier screen by lifting and pulling towards you.

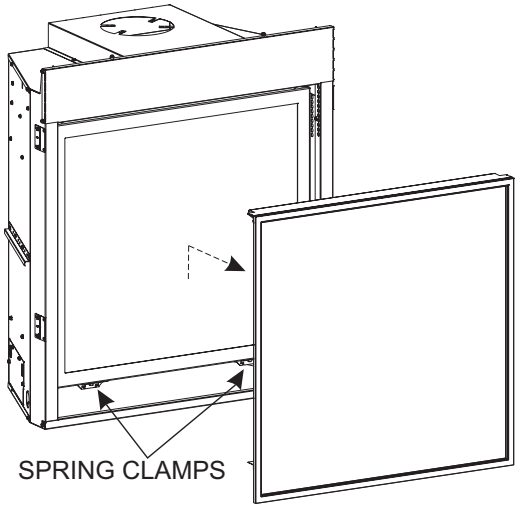

Figure 79

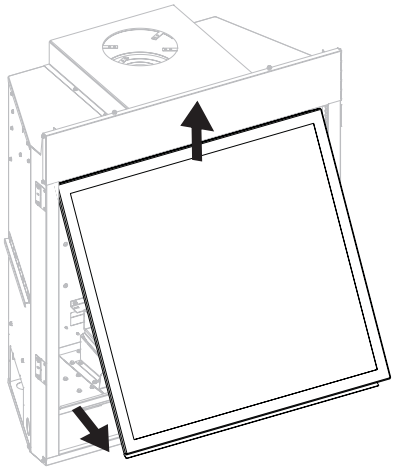

Figure 80

2. Locate the bottom two glass frame spring clamps. Pull forward and downward to release them from the Glass Door frame.
3. Remove the glass door by pulling the bottom of the door outward several inches, then lift upwards to disengage from the firebox upper flange.

Install Glass Door and Barrier Screen

1. When installing the glass door, make sure that the door top flange is hooked over the firebox top flange as illustrated in the “Correct” view in **Figure 81.**
   Important: Do not allow the gasket across the top of the door to roll up on top of the firebox flange as shown in “Incorrect” view in Figure 81.
2. To install correctly, the door should be held at an angle outward from the firebox as shown in the illustration, then carefully engage the upper flange of the door frame with the top flange of the firebox. Center the door left to right, then allow the bottom of the door to swing inward to seal against the firebox front.
3. Once the glass door is placed flat to the firebox front edges, engage the two spring latches to the bottom flange on the glass door frame to secure the door assembly.
4. Replace the barrier screen by hooking the top of the glass door and aligning the lower hook with the glass panel.

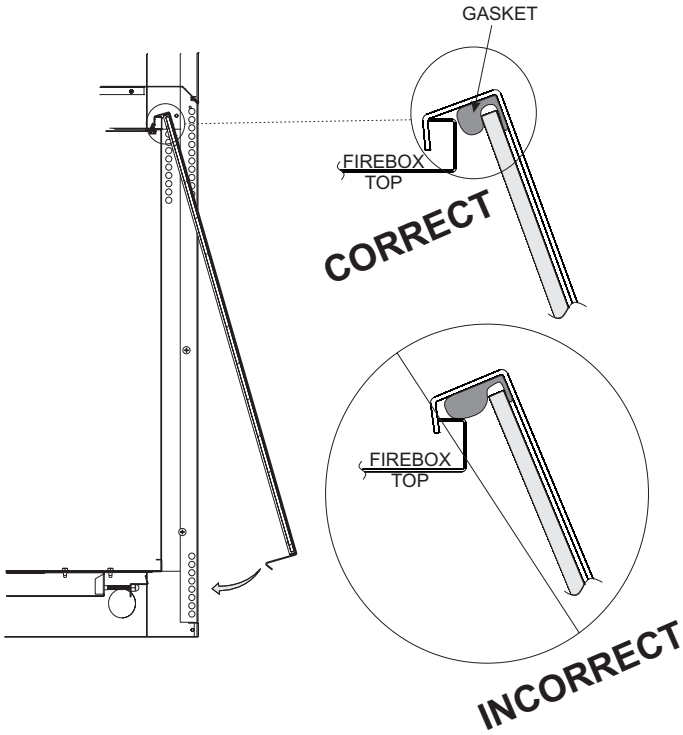

Figure 81

IMPORTANT SAFETY INFORMATION - INSTALLER

Maintenance Precautions
Installation and repair should be done by a qualified service person. The fireplace should be inspected before use and at least annually by a qualified service person. More frequent cleaning might be required due to excessive lint from carpeting, bedding material, etc.
Keep burner and control compartment clean.
Examine venting system periodically and replace damaged parts.
Make a periodic visual check of pilot and burners. Clean and replace damaged parts.

Damaged Fireplace
Do not use this fireplace if any part has been under water. Immediately call a qualified service technician to inspect the fireplace and to replace any part of the control system and any gas control which has been under water.
In the event of a natural disaster (tornado, earthquake, fire, etc.) have a qualified technician inspect the fireplace for damage or potential gas leaks. Repair or replace any damaged components before operating this fireplace.

For the Installer
- Leave these instructions with the homeowner.
- Replace any guard or protective device removed for servicing prior to operating the fireplace.
- During manufacture, this fireplace is treated with oils, films and bonding agents. These are not harmful but may produce smoke and odor as they burn off during initial operation. This is normal.
- Any modification to this fireplace or to controls can be dangerous. Improper installation or use of the fireplace can cause serious injury or death from fire, burns, explosion or carbon monoxide poisoning.
- Follow all local codes regarding installation, combustion and ventilation air or in the absence of local codes follow the National Fuel Gas Code ANSI Z223.1 (US installation), or CAN/CGA-B149, Installation Code (Canada Installation)
- Due to high temperatures, the fireplace should be located out of traffic and away from furniture and draperies.
- This fireplace must not share or be connected to a flue serving a separate solid-fuel burning fireplace.
- A barrier designed to reduce the risk of burns from the hot viewing glass is provided with this fireplace and shall be installed for the protection of children and other at-risk individuals.
- If the barrier becomes damaged, replace it with the manufacturer’s barrier for this fireplace.
- Before operating the fireplace, replace the door assembly and barrier screen if removed for service.
- If this fireplace is installed directly on carpeting, tile or other combustible material other than wood flooring the fireplace must be installed on a metal or wood panel extending the full width and depth of the fireplace.
- The base referred to above does not mean the fireproof base as used on wood stoves. The protection is for rugs that are extremely thick and light colored tile.
- Use Non-Combustible Materials where indicated for the fireplace installation. Non-combustible materials do not ignite or burn as a result of using the fireplace. These include metal, brick, ceramic, concrete, slate, glass, and plaster.
- Any adhesives used to attach tile, stone, other finishes must be rated for high temperatures (300°F +).
- Any mechanical fasteners used to install material must also be non-combustible, including wall anchors and tile spacers.
- Materials that pass the ASTM E 136 test (Standard Test Method for Behavior of Materials in a Vertical Tube Furnace at 750C) are considered non-combustible.

REQUIREMENTS FOR THE COMMONWEALTH OF MASSACHUSETTS

For all side wall horizontally vented gas fueled equipment installed in every dwelling, building or structure used in whole or in part for residential purposes, including those owned or operated by the Commonwealth and where the side wall exhaust vent termination is less than seven feet above finished grade in the area of the venting, including but not limited to decks and porches, the following requirements shall be satisfied:

1. INSTALLATION OF CARBON MONOXIDE DETECTORS. At the time of installation of the side wall horizontal vented gas fueled equipment, the installing plumber or gasfitter shall observe that a hard wired carbon monoxide detector with an alarm and battery back-up is installed on the floor level where the gas equipment is to be installed. In addition, the installing plumber or gasfitter shall observe that a battery operated or hard wired carbon monoxide detector with an alarm is installed on each additional level of the dwelling, building or structure served by the side wall horizontal vented gas fueled equipment. It shall be the responsibility of the property owner to secure the services of qualified licensed professionals for the installation of hard wired carbon monoxide detectors
   a. In the event that the side wall horizontally vented gas fueled equipment is installed in a crawl space or an attic, the hard wired carbon monoxide detector with alarm and battery back-up may be installed on the next adjacent floor level.
   b. In the event that the requirements of this subdivision can not be met at the time of completion of installation, the owner shall have a period of thirty days to comply with the above requirements; provided, however, that during said thirty day period, a battery operated carbon monoxide detector with an alarm shall be installed.

2. APPROVED CARBON MONOXIDE DETECTORS. Each carbon monoxide detector as required in accordance with the above provisions shall comply with NFPA 720 and be ANSI/UL 2034 listed and IAS certified.

3. SIGNAGE. A metal or plastic identification plate shall be permanently mounted to the exterior of the building at a minimum height of eight feet above grade directly in line with the exhaust vent termination for the horizontally vented gas fueled heating appliance or equipment. The sign shall read, in print size no less than 1/2 inch in size, **"GAS VENT DIRECTLY BELOW. KEEP CLEAR OF ALL OBSTRUCTIONS".**

4. INSPECTION. The state or local gas inspector of the side wall horizontally vented gas fueled equipment shall not approve the installation unless, upon inspection, the inspector observes carbon monoxide detectors and signage installed in accordance with the provisions of 248 CMR 5.08(2)(a) 1 through 4.
   (b) EXEMPTIONS: The following equipment is exempt from 248 CMR 5.08(2)(a)1 through 4:
      1. The equipment listed in Chapter 10 entitled "Equipment Not Required To Be Vented" in the most current edition of NFPA 54 as adopted by the Board; and
      2. Product Approved side wall horizontally vented gas fueled equipment installed in a room or structure separate from the dwelling, building or structure used in whole or in part for residential purposes.
   (d) MANUFACTURER REQUIREMENTS - GAS EQUIPMENT VENTING SYSTEM NOT PROVIDED. When the manufacturer of a Product Approved side wall horizontally vented gas fueled equipment does not provide the parts for venting the flue gases, but identifies "special venting systems", the following requirements shall be satisfied by the manufacturer:
      1. The referenced "special venting system" instructions shall be included with the appliance or equipment installation instructions; and
      2. The "special venting systems" shall be Product Approved by the Board, and the instructions for that system shall include a parts list and detailed installation instruction.
   (e) A copy of all installation instructions for all Product Approved side wall horizontally vented gas fueled equipment, all venting instructions, all parts lists for venting instructions, and/or all venting design instructions shall remain with the appliance or equipment at the completion of the installation.

ANNUAL FIREPLACE INSPECTION CHECKLIST

ANNUAL INSPECTION DATE >										
Inspect pilot and burner system and replace any damaged parts										
Check glass gasket and door for proper seal										
Check barrier screen for proper fit and structural integrity										
Check latches for proper operation and tensions										
Inspect log set/decorative media for debris and damage										
Clean dust and debris from fireplace										
Clean dust and debris from valves and control										
Clean glass with fireplace glass cleaner										
Freshen glowing embers if needed										
Replace batteries in battery pack										
“Replace batteries in transmitter and receiver (if installed)”										
Inspect venting for damage or corrosion										
Inspect venting for damage or obstruction										
SERVICE TECHNICIAN > SIGNATURE										

MASTER PARTS DISTRIBUTOR LIST

To Order Parts Under Warranty, please contact your local Empire dealer. See the dealer locator at www.empirecomfort.com. To provide warranty service, your dealer will need your name and address, purchase date and serial number, and the nature of the problem with the unit.
To Order Parts After the Warranty Period, please contact your dealer or one of the Master Parts Distributors listed below. This list changes from time to time. For the current list, please click on the Master Parts button at www.empirecomfort.com. Please note: Master Parts Distributors are independent businesses that stock the most commonly ordered Original Equipment repair parts for Heaters, Grills, and Fireplaces manufactured by Empire Comfort Systems Inc.

Dey Distributing
1401 Willow Lake Boulevard
Vadnais Heights, MN 55101

Phone: 651-490-9191
Toll Free: 800-397-1339
Website: www.deydistributing.com
Parts: Heater, Hearth and Grills

F. W. Webb Company
200 Locust Street
Hartford, CT 06114

Phone: 860-722-2433
Toll Free: 800-243-9360
Fax: 860-293-0479
Toll Free Fax: 800-274-2004
Websites: www.fwwebb.com & www.victormfg.com
Parts: Heater, Hearth and Grills

East Coast Energy Products
10 East Route 36
West Long Branch, NJ 07764

Phone: 732-870-8809
Toll Free: 800-755-8809
Fax: 732-870-8811
Website: www.eastcoastenergy.com
Parts: Heater, Hearth and Grills

HOW TO ORDER REPAIR PARTS

Parts Not Under Warranty

Parts can be ordered through your Service Person, Dealer, or a Master Parts Distributor. See this page for the Master Parts Distributors list. For best results, the **service person or dealer** should order parts through the distributor. Parts can be shipped directly to the **service person/dealer**.

Warranty Parts

Warranty parts will need a proof of purchase and can be ordered by your Service Person or Dealer. Proof of purchase is **required** for warranty parts.

All parts listed in the Parts List have a Part Number. When ordering parts, first obtain the Model Number and Serial Number from the name plate on your equipment. Then determine the Part Number (**not** the Index Number) and the Description of each part from the following illustration and part list. Be sure to give all this information . . .

Appliance Model Number _____ Part Description _____

Appliance Serial Number _____ Part Number _____

Type of Gas (Propane or Natural) _____

Do not order bolts, screws, washers or nuts. The standard hardware items can be purchased at your local hardware store.

WARRANTY

Empire Comfort Systems Inc. warranties this hearth product to be free from defects at the time of purchase and for the periods specified below. Hearth products must be installed by a qualified technician and must be maintained and operated safely, in accordance with the instructions in the owner's manual. This warranty applies to the original purchaser only and is not transferable. All warranty repairs must be accomplished by a qualified gas appliance technician.

Limited Lifetime Parts Warranty – Combustion Chamber, Heat Exchanger, and Factory-Installed Glass

If the combustion chamber, heat exchanger (see parts list) or factory-installed glass fails because of defective workmanship or material, Empire will repair or replace at Empire's option.

Limited Three-Year Parts Warranty – All Other Components

(Except Remote Controls, Thermostats, Accessories and Replacement Parts)
Should any part fail because of defective workmanship or material within three years from the date of purchase, Empire will repair or replace at Empire's option..

Limited One-Year Parts Warranty – Remote Controls, Thermostats, Accessories, and Parts

Should any remote control, thermostat, accessory, or other part fail because of defective workmanship within one year from the date of purchase, Empire will repair or replace at Empire's option.

Duties Of The Owner

The appliance must be installed by a qualified installer and operated in accordance with the instructions furnished with the appliance. A bill of sale, cancelled check, or payment record should be kept to verify purchase date and establish warranty period. Ready access to the appliance for service.

What Is Not Covered

Damages that might result from the use, misuse, or improper installation of this appliance.
Travel, diagnostic costs and freight charges on warranted parts to and from the factory.
Claims that do not involve defective workmanship or materials.
Unauthorized service or parts replacements.
Removal and reinstallation cost.
Inoperable due to improper or lack of maintenance.

How To Get Service

To make a claim under this warranty, please have your receipt available and contact your installing dealer. Provide the dealer with the model number, serial number, type of gas, and purchase verification. The installing dealer is responsible for providing service and will contact the factory to initiate any warranted parts replacements. Empire will make replacement parts available at the factory. Shipping expenses are not covered.
If, after contacting your Empire dealer, service received has not been satisfactory, contact: Consumer Relations Department, Empire Comfort Systems Inc., PO Box 529, Belleville, Illinois 62222, or send an e-mail to info@empirecomfort.com with "Consumer Relations" in the subject line.

Your Rights Under State Law

This warranty gives your specific legal rights, and you may also have other rights, which vary from state to state.

EMPIRE
COMFORT SYSTEMS
SINCE 1932

Empire Comfort Systems Inc.
Belleville, IL

If you have a general question about our products, please e-mail us at info@empirecomfort.com.

If you have a service or repair question, please contact your dealer.

www.empirecomfort.com