This Owner's Manual is provided and hosted by Appliance Factory Parts.

Appliance Factory Parts
Experts in BBQ, Humidifier, & Appliance Parts
1-800-955-7075

White Mountain Hearth ONR-30-2 Owner's Manual

Shop genuine replacement parts for White Mountain Hearth ONR-30-2

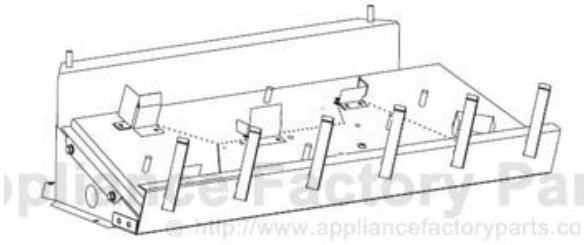

Find Your White Mountain Hearth Fireplace Parts - Select From 539 Models

-------- Manual continues below --------

EMPIRE
COMFORT SYSTEMS
SINCE 1932

INSTALLATION INSTRUCTIONS AND OWNER'S MANUAL

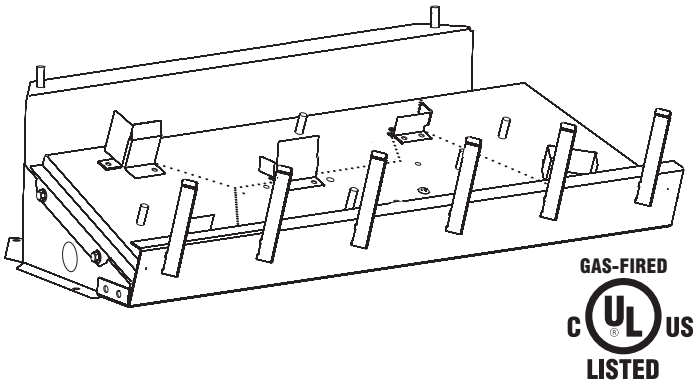

OUTDOOR VENTLESS DECORATIVE APPLIANCE

MILLIVOLT MODELS
ONR-24-2
ONR-30-2

INTERMITTENT MODELS
ONI-24-2
ONI-30-2

⚠ DANGER

CARBON MONOXIDE HAZARD

This appliance can produce carbon monoxide which has no odor.

Using it in an enclosed space can kill you.

Never use this appliance in an enclosed space such as a camper, tent, car or home.

Installer:	**Leave this manual with the appliance.**
Consumer:	**Retain this manual for future reference.**

- **Do not store or use gasoline or other flammable vapors and liquids in the vicinity of this or any other appliance.**
- **Installation and service must be performed by a qualified installer, service agency or the gas supplier.**

⚠ WARNING

If the information in these instructions are not followed exactly, a fire or explosion may result causing property damage, personal injury or loss of life.

⚠ WARNING

Improper installation, adjustment, alteration, service or maintenance can cause injury or property damage. Read the installation, operating and maintenance instructions thoroughly before installing or servicing this equipment.

⚠ WARNING

For Outdoor Use Only.

⚠ WARNING

If not installed, operated and maintained in accordance with the manufacturer's instructions, this product could expose you to substances in fuel or from fuel combustion which can cause death or serious illness.

⚠ WARNING

If you smell gas:
1. **Shut off gas to the appliance.**
2. **Extinguish any open flame.**
3. **If odor continues, keep away from the appliance and immediately call your gas supplier or fire department.**

⚠ WARNING

Do not store or use gasoline or other flammable vapors and liquids in the vicinity of this or any other appliance.

An LP-cylinder not connected for use shall not be stored in the vicinity of this or any other appliance.

TABLE OF CONTENTS

Section	Page
Important Safety Information	3
Safety Information for Users of LP Gas	4
Introduction	5-7
Clearances	7
General Information	7-8
Specifications	8
Before Fully Installing the Appliance	8
Gas Supply	9
Operation Instrudtions/Flame Appearance	10
ONI-(24,30) Lighting Instructions	11
ONI-(24,30) Wiring	12
ONR-(24,30) Lighting Instructions	13
Pilot and Main Burner FLame Characteristics	14
Cleaning and Servicing	14
ONR-(24,30) Wiring	15
Remote Control Installation and Operation	16
Troubleshooting	17
Parts View & List	18
Master Parts Distributor List	19
How Tor Order Repair Parts	19
Warranty Terms	20

⚠ CAUTION: If logs or branches are damaged do not use.

A certain amount of sooting will occur which enhances the realistic look of the logs and branches. If an excessive amount of sooting does occur you can use a gas log cleaner to remove the soot build-up or lightly brush off the soot build-up with a soft bristle brush taking care not to damage the logs and branches.

NATIONAL FIREPLACE INSTITUTE NFI CERTIFIED www.nficertified.org

We suggest that our gas hearth products be installed and serviced by professionals who are certified in the U.S. by the National Fireplace Institute® (NFI) as NFI Gas Specialists.

IMPORTANT SAFETY INFORMATION

Installer: Please leave these instructions with the owner for future reference.

This unit complies with ANSI Z21.97/CSA 2.41 Decorative Gas Appliances For Installation In Solid Fuel Burning Fireplaces. Do not burn wood or solid fuels in a fireplace where a decorative gas log set is installed. This appliance is for installation only in a solid fuel burning fireplace, masonry fireplace or manufactured fireplace.

⚠ **WARNING:** Any modification to this gas log set or to controls can be dangerous. Improper installation or use of the gas log set can cause serious injury or death from fire, burns, explosion or carbon monoxide poisoning.

1. Please follow all local codes regarding installation, combustion and ventilation air or in the absence of local codes follow the National Fuel Gas Code ANSI Z223.1(U.S. installation), or CAN/CGA-B149, Installation Code (Canada installation).
2. Proper installation, burner pan location and log placement is important to achieve optimum look and performance of your gas log set. The logs have been designed for easy location and placement on the grate and must be followed for proper operation.
3. Do not operate this log set with glass doors in the closed position. A fireplace screen must be in place when the log set is burning.
4. Young children must be carefully supervised when they are in the same room as the gas log while in operation. Do not place stockings, clothing or any flammable material above or near the fireplace.
5. Do not substitute or use materials other than those supplied for use with the log set.

DO NOT OPERATE THIS GAS LOG SET WITH GLASS DOORS CLOSED.

⚠ **DANGER**: Indicates a hazardous situation which, if not avoided, will result in death or serious injury.

⚠ **WARNING**: Indicates a hazardous situation which, if not avoided, could result in death or serious injury.

⚠ **CAUTION**: Indicates a hazardous situation which, if not avoided, could result in minor or moderate injury.

NOTICE: Addresses practices not related to personal injury.

- **Children and adults should be alerted to the hazards of high surface temperatures and should stay away to avoid burns or clothing ignition.**
- **Young children should be carefully supervised when they are in the same room as the appliance.**
- **Clothing or other flammable material should not be placed on or near the appliance.**
- **Do not place trash or other articles on the log set during operation.**
- **During manufacturing, fabricating and shipping, various components of this appliance are treated with certain oils, films or bonding agents. These bonding agents are not harmful but may produce annoying smoke and smells as they are burned off during initial operation of the appliance. This is a normal temporary occurrence.**
- **Keep burner and control compartment clean.**
- **Installation and repair should be done by a QUALIFIED SERVICE PERSON. The appliance should be inspected before use and at least annually by a qualified service person. More frequent cleaning may be required due to excessive lint from carpeting, bedding materials, etc. It is imperative that control compartments, burners and circulating air passageways of the appliance be kept clean.**
- **DO keep the appliance area clear and free from combustible material, gasoline and other flammable vapors and liquids.**
- **A yearly examination and cleaning of the venting system of the solid-fuel burning fireplace must be performed by a qualified agency.**
- **DO make a periodic visual check of pilot and burners. Clean and replace damaged parts.**
- **DO NOT use this appliance if any part has been under water. Immediately call a qualified service technician to inspect the appliance and to replace any part of the control system and any gas control which has been under water.**

SAFETY INFORMATION FOR USERS OF LP-GAS

Propane (LP-Gas) is a flammable gas which can cause fires and explosions. In its natural state, propane is odorless and colorless. You may not know all the following safety precautions which can protect both you and your family from an accident. Read them carefully now, then review them point by point with the members of your household. Someday when there may not be a minute to lose, everyone's safety will depend on knowing exactly what to do. If, after reading the following information, you feel you still need more information, please contact your gas supplier.

LP-GAS WARNING ODOR

If a gas leak happens, you should be able to smell the gas because of the odorant put in the LP-Gas. That's your signal to go into immediate action!

- Do not operate electric switches, light matches, use your phone. Do not do anything that could ignite the gas.
- Get everyone out of the building, vehicle, trailer, or area. Do that IMMEDIATELY.
- Close all gas tank or cylinder supply valves.
- LP-Gas is heavier than air and may settle in low areas such as basements. When you have reason to suspect a gas leak, keep out of basements and other low areas. Stay out until firefighters declare them to be safe.
- Use your neighbor's phone and call a trained LP-Gas service person and the fire department. Even though you may not continue to smell gas, do not turn on the gas again. Do not re-enter the building, vehicle, trailer, or area.
- **Finally,** let the service man and firefighters check for escaped gas. Have them air out the area before you return. Properly trained LP-Gas service people should repair the leak, then check and relight the gas appliance for you.

NO ODOR DETECTED - ODOR FADE

Some people cannot smell well. Some people cannot smell the odor of the chemical put into the gas. You must find out if you can smell the odorant in propane. Smoking can decrease your ability to smell. Being around an odor for a time can affect your sensitivity or ability to detect that odor. Sometimes other odors in the area mask the gas odor. People may not smell the gas odor or their minds are on something else. Thinking about smelling a gas odor can make it easier to smell.

The odorant in LP-gas is colorless, and it can fade under some circumstances. For example, if there is an underground leak, the movement of the gas through soil can filter the odorant. Odorants in LP-Gas also are subject to oxidation. This fading can occur if there is rust inside the storage tank or in iron gas pipes.

The odorant in escaped gas can adsorb or absorb onto or into walls, masonry and other materials and fabrics in a room. That will take some of the odorant out of the gas, reducing its odor intensity.

LP-Gas may stratify in a closed area, and the odor intensity could vary at different levels. Since it is heavier than air, there may be more odor at lower levels. Always be sensitive to the slightest gas odor. If you detect any odor, treat it as a serious leak. Immediately go into action as instructed earlier.

SOME POINTS TO REMEMBER

- **Learn to recognize the odor of LP-gas.** Your local LP-Gas Dealer can give you a "Scratch and Sniff" pamphlet. Use it to find out what the propane odor smells like. If you suspect that your LP-Gas has a weak or abnormal odor, call your LP-Gas Dealer.
- If you are not qualified, do not light pilot lights, perform service, or make adjustments to appliances on the LP-Gas system. If you are qualified, consciously think about the odor of LP-Gas prior to and while lighting pilot lights or performing service or making adjustments.
- Sometimes a basement or a closed-up house has a musty smell that can cover up the LP-Gas odor. Do not try to light pilot lights, perform service, or make adjustments in an area where the conditions are such that you may not detect the odor if there has been a leak of LP-Gas.
- Odor fade, due to oxidation by rust or adsorption on walls of new cylinders and tanks, is possible. Therefore, people should be particularly alert and careful when new tanks or cylinders are placed in service. Odor fade can occur in new tanks, or reinstalled old tanks, if they are filled and allowed to set too long before refilling. Cylinders and tanks which have been out of service for a time may develop internal rust which will cause odor fade. If such conditions are suspected to exist, a periodic sniff test of the gas is advisable. **If you have any question about the gas odor, call your LP-gas dealer. A periodic sniff test of the LP-gas is a good safety measure under any condition.**
- If, at any time, you do not smell the LP-Gas odorant and you think you should, assume you have a leak. Then take the same immediate action recommended above for the occasion when you do detect the odorized LP-Gas.
- If you experience a complete "gas out," (the container is under no vapor pressure), turn the tank valve off immediately. If the container valve is left on, the container may draw in some air through openings such as pilot light orifices. If this occurs, some new internal rusting could occur. If the valve is left open, then treat the container as a new tank. Always be sure your container is under vapor pressure by turning it off at the container before it goes completely empty or having it refilled before it is completely empty.

INTRODUCTION

Product Components

- Burner Pan Assembly
  - — "R" model includes millivolt valve and safety thermopile generator and on/off switch. A remote control or wall switch accessory is available as an option for this model.

Always consult your local Building Department regarding regulations, codes or ordinances which apply to the installation of a vented decorative gas log set in a solid-fuel burning fireplace.

This appliance is only for use with the type of gas indicated on the rating plate.

⚠ WARNING

ANY CHANGE TO THIS APPLIANCE OR ITS CONTROLS CAN BE DANGEROUS.
Improper installation or use of the appliance can cause serious injury or death from fire, burns, explosion or carbon monoxide poisoning.

Instructions to Installer

1. Installer must leave instruction manual with owner after installation.
2. Installer must have owner fill out and mail warranty card supplied with this fireplace.
3. Installer should show owner how to start and operate unvented room heater.

Always consult your local Building Department regarding regulations, codes or ordinances which apply to the installation of an unvented room heater.

*Aftermarket: Completion of sale, not for purpose of resale, from the manufacturer.

This appliance is only for use with the type of gas indicated on the rating plate. This appliance is not convertible for use with other gases.

WARNING: ANY CHANGE TO THIS HEATER OR ITS CONTROLS CAN BE DANGEROUS.
Improper installation or use of the heater can cause serious injury or death from fire, burns, explosion or carbon monoxide poisoning.

This series is design certified in accordance with American National Standard Z21.97.1/CSA 2.41 by the Canadian Standards Association Laboratories as an Outdoor Gas Fireplace and should be installed according to these instructions.

Any alteration of the original design, installed other than as shown in these instructions or use with a type of gas not shown on the rating plate is the responsibility of the person and company making the change.

750 Millivolt System

When you ignite the pilot, the thermocouple produces millivolts (electrical current) which energizes the magnet in the gas valve. After 30 seconds to 1 minute time period you can release the gas control knob and the pilot will stay ON. Allow your pilot flame to operate an additional one (1) to two (2) minutes before you turn the gas control knob from the PILOT position to the ON position. This time period allows the millivolts (electrical energy) to build-up to a sufficient level allowing the gas control to operate properly.

Important

All correspondence should refer to complete Model Number, Serial Number and type of gas.

Moisture Resistance

This outdoor fireplace will shed moderate amounts of water, but is not waterproof. Water and condensing water vapor may enter the chase under certain conditions.

The fireplace will not perform as an exterior wall. Moisture penetration must be considered for construction that places the fireplace in structure walls or on moisture sensitive surfaces.

When installed on exterior walls: Empire Comfort Systems recommends the fireplace chase be constructed outside the structure's weather envelope. Where the platform meets the wall, use a flashing detail similar to that required for attached decks. Chase platforms, including hearths should slope away from the structure at 1/4 in per foot. The fireplace can be shimmed level.

When installed on surfaces where water may collect or cause damage: Empire Comfort Systems recommends a slope of 1/8 in to 1/4 in per foot towards the drain port suggested. The fireplace can be shimmed level.

Hearths should slope away from the front of the fireplace and chase at 1/8 in to 1/4 in per foot. Metal safety strips must be on top of any combustible hearth materials used for moisture management.

When purchasing a firebox or fireplace we recommend you also buy a weather cover or glass door accessory to protect the unit from moisture.

Never install a burner where moisture cannot drain off easily. We recommend a weather barrier - such as a cover or bifold glass doors - to protect the burner from moisture.

Screened Porch Installation

The fireplace may be installed safely and is design certified by CSA to be installed in a screen porch with the following guidelines.

Minimum Porch Area	96 sq. feet (9 sq m)
Minimum Ceiling Height	92" (234 cm)
Minimum of two (2) walls must be screened	
Minimum top of screen height, side walls	6'6" (198 cm)
Minimum screen area	64 sq. feet (6 sq m)

INTRODUCTION

Qualified Installing Agency
Installation and replacement of gas piping, gas utilization equipment or accessories and repair and servicing of equipment shall be performed only by a qualified agency. The term "qualified agency" means any individual, firm, corporation or company which either in person or through a representative is engaged in and is responsible for (a) the installation or replacement of gas piping or (b) the connection, installation, repair or servicing of equipment, who is experienced in such work, familiar with all precautions required and has complied with all the requirements of the authority having jurisdiction.

Commonwealth of Massachusetts: The installation must be made by a licensed plumber or gas fitter in the Commonwealth of Massachusetts.

The installation must conform with local codes or, in the absence of local codes, with the National Fuel Gas Code, ANSI Z223.1.*
**Available from the American National Standards Institute, Inc. 1430 Broadway, New York, N.Y. 10018.*

High Altitudes
For altitudes/elevations above 2,000 feet (610m), ratings should be reduced at the rate of 4 percent for each 1,000 feet (305m) above sea level. Contact the manufacturer or your gas company before changing spud/orifice size.

Well Head Gas Installations
Some natural gas utilities use "well head" gas. This may affect the Btu output of the unit. Contact the gas company for the heating value. Contact the manufacturer or your gas company before changing spud/orifice size.

WARNING: This appliance is equipped for (natural gas or propane) gas. Field conversion is not permitted.

- When the appliance is connected to a fixed piping system, the installation must conform with ocal codes, or in the absence of local codes with the *National Fuel Gas Code, ANSI Z223.1/NFPA 54*, or *International Fuel Gas Code*.
- When installed, the appliance must be electrically grounded in accordance with local codes, or in the absence of local codes with the *National Electrical Code, ANSI/NFPA 70*, if applicable.
- Solid fuels shall not be burned in this appliance.
- The maximum gas inlet supply pressure is 13" for LP and 10.5" for NAT.
- For appliances for fixed fuel piping system and equipped with an appliance gas pressure regulator, the required manifold pressure in inches water column: 10" for LP and 3.5" for NAT.
- For appliances for fixed fuel piping system and equipped with an appliance gas pressure regulator, the appliance and its individual shutoff valve must be disconnected from the gas supply piping system during any pressure testing of that system at test pressures in excess of 1/2 psi (3.5 kPa). The appliance must be isolated from the gas supply piping system by closing its individual manual shutoff valve during any pressure testing of the gas supply piping system at test pressures equal to or less than 1/2 psi (3.5 kPa).

For an appliance designed for use with a non-disposable self-contained LP-gas supply system:

- Propane cylinders may be acceptable for use with the appliance provided they are are compatible with the appliance retention means.
- LP-gas supply cylinder must be constructed and marked in accordance with the *U.S. Department of Transportation (D.O.T.) Specifications for LP-Gas Cylinders*, or the *Standard for Cylinders, Spheres and Tubes for Transportation of Dangerous Goods and Commission, CAN/CSA-B339* as applicable.
- LP-gas supply cylinder must have an overfill prevention device.
- LP-gas supply cylinder must have a connection device compatible with the connection of the appliance.
- If the appliance is equipped with a CGA No. 600 Cylinder Connection Device, the cylinder must be disconnected when the appliance is not in use.
- If appliance is to be permanently connected to a gas piping system from a remote supply tank, installation must be in accordance with local codes or, in the absence of local codes, with the *National Fuel Gas Codes ANSI Z223.1/NFPA 54.*

Enclosures for LP-gas supply cylinders shall be ventilated by openings at the level of the cylinder valve and at floor level. The effectiveness of the opening(s) for purposes of ventilation shall be determined with the LP-gas supply cylinder(s) in place. This shall be accomplished by one of the following.

a. One side of the enclosure shall be completely open; or
b. For an enclosure having four sides, a top and a bottom:
    1. At least two ventilation openings at cylinder valve level shall be provided in the side wall, equally sized, spaced at 180 degrees (3.14rad), and unobstructed. Each opening shall have a total free area of not less than 1/2 square inch per pound (2.3 sq. cm/kg) of stored fuel capacity and not less than a total free area of 10 square inches (64.5 sq. cm).

INTRODUCTION

2. Ventilation opening(s) shall be provided at floor level and shall have a total free area of not less than 1/2 square inch per pound (3.2 sq. cm/kg) of stored fuel capacity and not less than a total free area of 10 square inches (64.5 sq. cm). If ventilation openings at floor level are in a side alll, there shall be at least two openings. The bottom of the openings shall be at floor level and the upper edge no more than 5 inches (127 mm) above the floor. The openings shall be equally sized, spaced at 180 degrees (3.14 rad) and unobstructed.
3. Every opening shall have minimum dimensions so as to permit the entrance of a 1/8 inch (3.2 mm) diameter rod.

- Cylinder valves shall be readily accessible for hand operation. A door on the enclosure to gain access to the cylinder valves is acceptable, provided it is non-locking and can be opened without the use of tools.
- There shall be a minimum clearance of 2 inches (51 mm) between the lower surface of the floor of the LP-gas supply cylinder enclosure and the ground.
- The design of the appliance shall be such that (1) the LP-gas supply cylinder(s) can be connected, disconnected and the connections inspected and tested outside the cylinder enclosure; and (2) those connections which could be disturbed when installing the cylinder(s) in the enclosure can be leak tested inside the enclosure;

CLEARANCES

Minimum Dimensions For Solid Fuel Burning Fireplaces

Model	A	B	C	D
ONR-24	28"	15 9/16"	34 5/16"	24 3/16"
ONI-24	28"	15 9/16"	34 5/16"	24 3/16"
ONR-30	32"	15 9/16"	38 5/16"	24 3/16"
ONI-30	32"	15 9/16"	38 5/16"	24 3/16"

The dimensions shown and defined in the fireplace instructions are minimum clearances to maintain in installing this heater. Left and right clearances are determined when facing the front of the heater.

"A" dimension includes module cover.

Glass Doors
Make sure that glass doors are open during all operations of the logset. The opening of the glass door frame should be the dimension used for the minimum front opening of the firebox.

Follow these instructions to ensure safe installation.
Failure to follow instructions exactly can create a fire hazard.

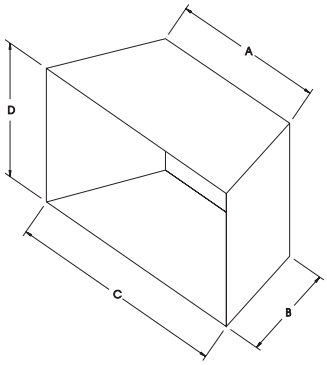

GENERAL INFORMATION

This series is design certified in accordance with American National Standard/CSA Standard Z21.97 Outdoor Fireplace, respectively, by the Canadian Standards Association as a Vented Decorative Appliance and should be installed according to these instructions.

Any alteration of the original design, installed other than as shown in these instructions or use with a type of gas not shown on the rating plate is the responsibility of the person and company making the change.

Important
All correspondence should refer to complete Model Number, Serial Number and type of gas.

Gas Inlet ONR/ONI Models	3/8" (9.5mm)
Accessories for ONR Models	
Battery Operated Remote Control	FRBC
Wall Switch	FWS

GENERAL INFORMATION (continued)

Qualified Installing Agency

Installation and replacement of gas piping, gas utilization equipment or accessories and repair and servicing of equipment shall be performed only by a qualified agency. The term "qualified agency" means any individual, firm, corporation or company which either in person or through a representative is engaged in and is responsible for (a) the installation or replacement of gas piping or (b) the connection, installation, repair or servicing of equipment, who is experienced in such work, familiar with all precautions required and has complied with all the requirements of the authority having jurisdiction.

Commonwealth of Massachusetts: The installation must be made by a licensed plumber or gas fitter in the Commonwealth of Massachusetts.

The installation and the provisions for combustion and ventilation air must conform with the *National Fuel Gas Code, ANSI Z223.1/* NFPA54* Canadian Installation Code *CAN/CGA B149.*
**Available from the American National Standards Institute, Inc. 11 West 42nd St., New York, N.Y. 10018.*

High Altitude Installation

When installing this unit at an elevation above 2000 feet (in the United States) it may be necessary to decrease the input rating by changing the existing burner orifice to a smaller size. Generally, input should be reduced 4 percent for each 1000 feet above sea level. However, if the heating value of the gas has been reduced, this general rule may not apply. Check with local gas utility for proper orifice size identification.

For Canadian high altitude applications, this appliance is suitable for installation at elevations between 0 feet (0m) and 4,500 (1,370m) without change.

When installing this unit at an elevation above 4500 feet (1,370m) (in Canada), check with local authorities.

Consult your local gas utility for assistance in determining the proper orifice for location.

SPECIFICATIONS

MODEL	ONI(24,30)P	ONI(24,30)N	ONR(24,30)P	ONR(24,30)N
Input BTU/Hr Maximum	50,000	50,000	50,000	50,000
Input BTU/Hr Minimum	34,000	32,000	38,000	38,000
Orifice	#45	#29	#45	#29
Air Shutter Opening	Full Open	1/8" Open	Full Open	1/8" Open

BEFORE FULLY INSTALLING THE APPLIANCE

If the burner is to be placed inside an outdoor firebox without glass doors, a rain shield must be placed over the burner and control module.

You must secure the gas log heater to the fireplace floor. If not, the entire unit may move when you adjust the controls. Movement of unit may cause shifting of the gas logs which leads to improper burning.

1. Center the gas burner in the fireplace or firebox. The grates must clear the fireplace or firebox screen.
2. An anchor hole is provided in the two bottom side members of the grate frame. After centering the grate correctly, mark the hole positions on the fireplace/firebox floor. Drill two (2) 5/32" diameter holes approximately 1-1/2" deep for masonry screws or 1/8" hole for sheet metal screws.
3. Anchor the grate to the fireplace/firebox floor using the screws provided.

Proper installation of the grate is essential to prevent any movement of the gas logs and controls during operation.

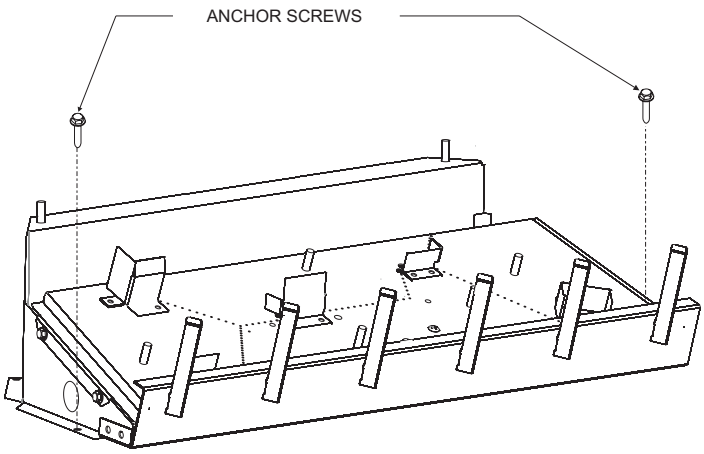

Figure 1

GAS SUPPLY

Check all local codes for requirements, especially for the size and type of gas supply line required.

Recommended Gas Pipe Diameter

Pipe Length	Schedule 40 Pipe Inside Diameter		Tubing, Type L Outside Diameter	
	Nat.	L.P.	Nat.	L.P.
0-10 feet 0-3 meters	1/2” 12.7mm	3/8” 9.5mm	1/2” 12.7mm	3/8” 9.5mm
10-40 feet 4-12 meters	1/2” 12.7mm	1/2” 12.7mm	5/8” 15.9mm	1/2” 12.7mm
40-100 feet 13-30 meters	1/2” 12.7mm	1/2” 12.7mm	3/4” 19mm	1/2” 12.7mm
100-150 feet 31-46 meters	3/4” 19mm	1/2” 12.7mm	7/8” 22.2mm	3/4” 19mm

***NOTICE*:** Never use plastic pipe. Check to confirm whether your local codes allow copper tubing or galvanized.

***NOTICE*:** Since some municipalities have additional local codes, it is always best to consult your local authority and installation code.

Installing a New Main Gas Cock

Each appliance should have its own manual gas cock.

In the state of Massachusetts the gas cock must be a T handle type.

A manual main gas cock should be located in the vicinity of the unit. Where none exists, or where its size or location is not adequate, contact your local authorized installer for installation or relocation.

Compounds used on threaded joints of gas piping shall be resistant to the action of liquefied petroleum gases. The gas lines must be checked for leaks by the installer. This should be done with a soap solution watching for bubbles on all exposed connections, and if unexposed, a pressure test should be made.

Never use an exposed flame to check for leaks. Appliance must be disconnected from piping at inlet of control valve and pipe capped or plugged for pressure test. Never pressure test with appliance connected; control valve will sustain damage!

A gas valve and ground joint union should be installed in the gas line upstream of the gas control to aid in servicing. It is required by the National Fuel Gas Code that a drip line be installed near the gas inlet. This should consist of a vertical length of pipe tee connected into the gas line that is capped on the bottom in which condensation and foreign particles may collect.

The use of the following gas connectors is recommended:

— ANS Z21.24 Appliance Connectors of Corrugated Metal Tubing and Fittings
— ANS Z21.45 Assembled Flexible Appliance Connectors of Other Than All-Metal Construction

The above connectors may be used if acceptable by the authority having jurisdiction. The state of Massachusetts requires that a flexible appliance connector cannot exceed three feet in length.

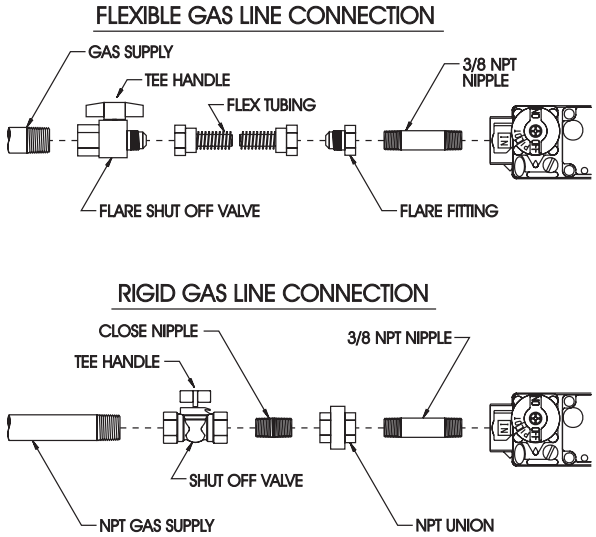

Figure 2

Pressure Testing of the Gas Supply System

1. To check the inlet pressure to the gas valve, a 1/8" (3.175mm) N.P.T. plugged tapping, accessible for test gauge connection, must be placed immediately upstream of the gas supply connection to the appliance.
2. The appliance and its individual shutoff valve must be disconnected from the gas supply piping system during any pressure testing of that system at test pressures in excess of 1/2 psig (3.5 kPa).
3. The appliance must be isolated from the gas supply piping system by closing its individual manual shutoff valve during any pressure testing of the gas supply piping system at test pressures equal to or less than 1/2 psig (3.5 kPa).

Attention! If one of the procedures results in pressures in excess of 1/2 psig (14" w.c.) (3.5 kPa) on the appliance gas valve, it will result in a hazardous condition.

Checking Manifold Pressure

Natural gas models will have a manifold pressure of approximately 3.5" w.c. (.871kPa) at the pressure regulator outlet with the inlet pressure to the pressure regulator from a minimum of 5.0" w.c. (1.120kPa) for the purpose of input adjustment to a maximum of 10.5" w.c. (2.615kPa).

Propane gas models will have a manifold pressure approximately 10.0" w.c. (2.49kPa) at the pressure regulator outlet with the inlet pressure to the pressure regulator from a minimum of 11.0" w.c. (2.739kPa) for the purpose of input adjustment to a maximum of 13.0" w.c. (3.237kPa).

ONR and ONI

***NOTICE*:** The gas control is equipped with a captured screw type pressure test point, therefore it is not necessary to provide a 1/8" test point up stream of the control.

OPERATION INSTRUCTIONS/FLAME APPEARANCE

Flames from the pilot (rear right back side of the pan burner) as well as the main flame should be visually checked as the log set is installed.

In normal operation at full rate after 10 to 15 minutes, the flame appearance should be sets of yellow flames.

NOTE: All flames will be random by design, flame height will go up and down.

During manufacturing, fabricating and shipping, various components of this appliance are treated with certain oils, films or bonding agents. These chemicals are not harmful, but may produce annoying smoke and smells as they are burned off during the initial operation of the appliance. This is a normal and temporary occurrence.

The initial break-in operation should last 2-3 hours with the burner at the highest setting. Any odors remaining after this initial break-in will be slight and will disappear with continued use.

PERIODIC CLEANING – Refer to parts diagram for location of items discussed below.

- Do not use cleaning fluid to clean logs or any part of heater.
- Logs - brush with soft bristle brush or vacuum with brush attachment.
- Remove loose particles and dust from the burner areas, controls, piezo covers and grate.
- Inspect and clean burner air intake hole. Remove lint or particles with brush. Failure to keep air intake hole clean will result in sooting and poor combustion.

ANNUAL CLEANING/INSPECTION – Refer to parts diagram for location of items discussed below.

- Inspect and clean burner air intake hole. Remove lint or particles with vacuum or brush. Failure to keep air intake hole clean will result in sooting and poor combustion.
- Inspect and clean all burner ports.
- Inspect pilot for operation and accumulation of lint at air intake holes.
- Verify flame pattern and log placement for proper operation.
- Verify smooth and responsive ignition of main burner.

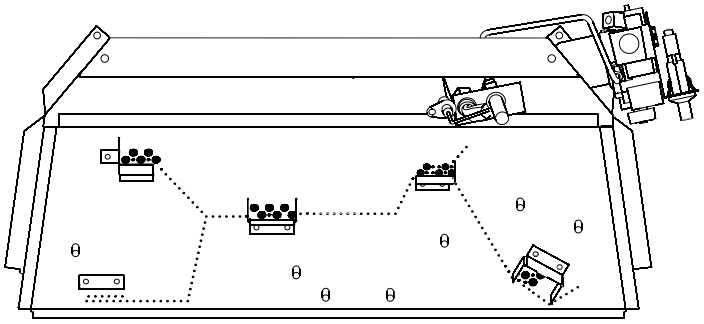

Millivolt - Figure 3

ONI-(24, 30) LIGHTING INSTRUCTIONS

FOR YOUR SAFETY READ BEFORE LIGHTING

WARNING: IF YOU DO NOT FOLLOW THESE INSTRUCTIONS EXACTLY, A FIRE OR EXPLOSION MAY RESULT CAUSING PROPERTY DAMAGE, PERSONAL INJURY, OR LOSS OF LIFE.

A. This appliance has a pilot which must be lighted by hand. When lighting the pilot, follow these instructions exactly.

B. BEFORE LIGHTING, smell around the appliance area for gas. Be sure to smell next to the floor because some gas in heavier than air and will settle on the floor.

WHAT TO DO IF YOU SMELL GAS

- **Do not try to light any appliance.**
- **Do not touch any electrical switch.**
- **Do not use any phone in your building.**
- **Immediately call your gas supplier from a neighbor's phone. Follow the gas supplier's instructions. If you can not reach your gas supplier, call the fire department.**

C. Use only your hand to push in or turn the gas control knob. Never use tools. If the knob will not push in or turn by hand, don't try to repair it, call a qualified service technician. Force or attempted repair may result in a fire or explosion.

D. Do not use this appliance if any part has been under water. Immediately call a qualified service technician to inspect the appliance and to replace any part of the control system and any gas control which has been under water.

LIGHTING INSTRUCTIONS

1. **STOP! Read the safety information above.**
2. **Turn gas cock counterclockwise to "ON" position.**
3. **Wait ten (10) minutes to clear out any gas. Then smell for gas, including near the floor. If you smell gas, STOP! Follow "B" in the safety information above on this label. If you do not smell gas, go to the next step.**
4. **Find spark and sensor probes.**
5. **Using the remote control, turn main flame to "ON." If the burner does not light within 60 seconds, stop and go to Step 5.**
6. **If the burner does not stay lit, stop and immediately call a qualified service technician or gas supplier.**
7. **If the burner does not operate properly after several tries, turn the gas control knob clockwise to "OFF" and call your service technician or gas supplier.**
8. **Operation of the gas valve must be controlled by using the hand held remote control. Refer to remote instructions for detailed operation information.**

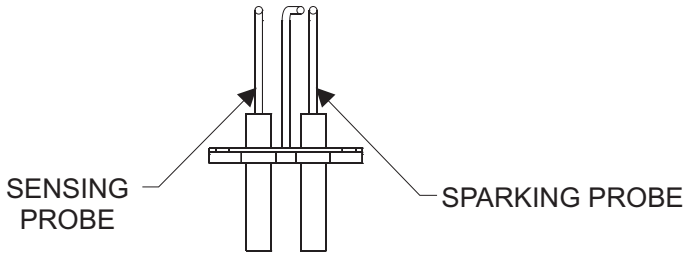

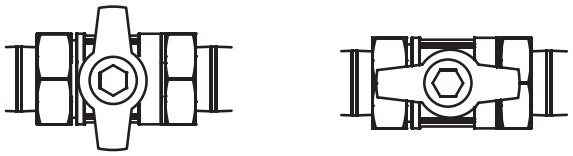

Provided by installer.

TO TURN OFF GAS TO APPLIANCE

1. **Locate On/Off gas cock and turn clockwise to "OFF." Do not force.**

ONI-(24,30) WIRING

Shield Installation

1. Slip the split grommets over the wire harness.
2. Place the shield into position over the control module.
3. Feed wiring into slots on either side of the control shield.
4. Snap the grommets into the holes on the shield to retain and protect the wiring.
5. Complete wiring installation.
6. Secure shield to valve with two screws as shown.

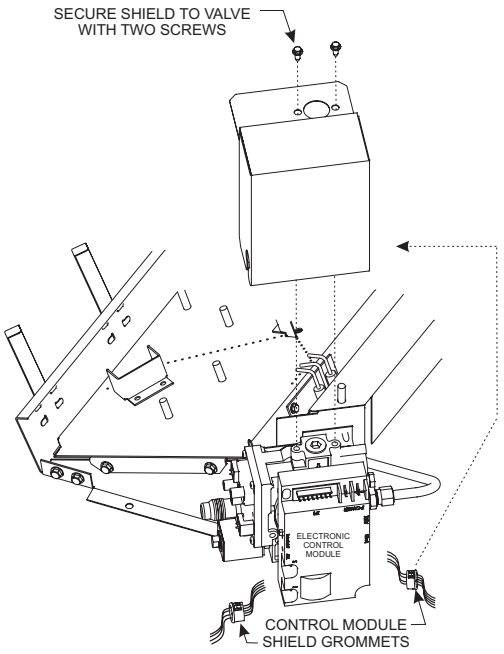

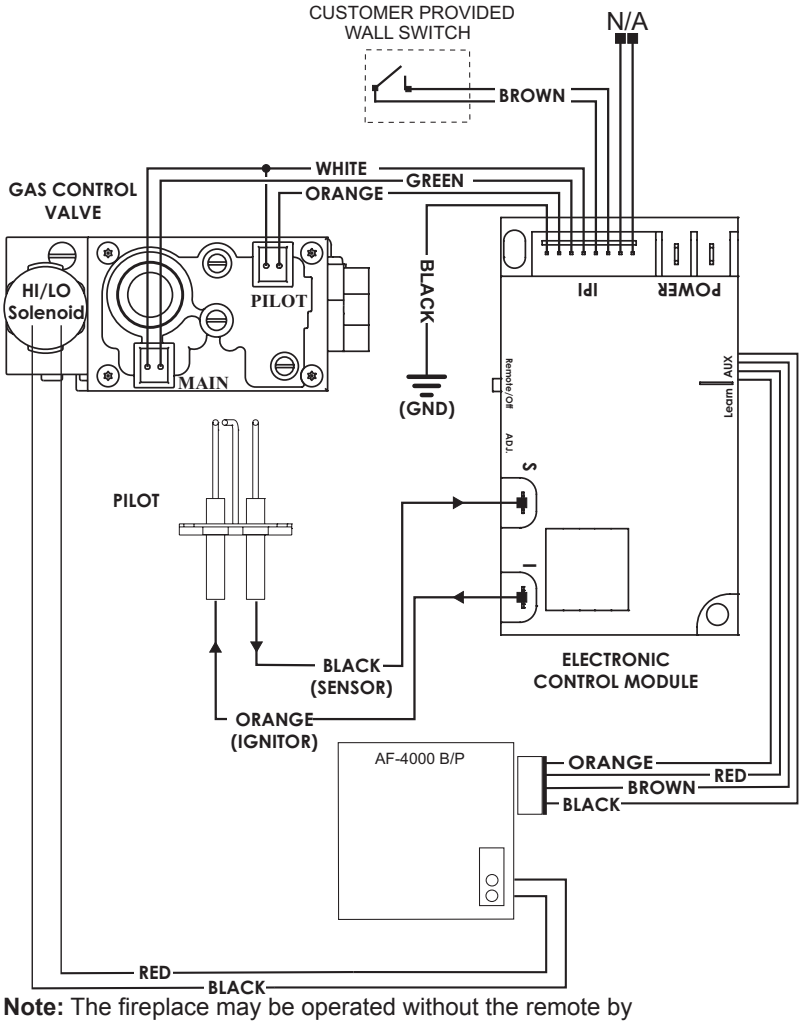

Note: The fireplace may be operated without the remote by connecting the brown control module wires to a wall switch. The remote/off switch on the control module must be in the "OFF" position.

ONR-(24, 30) LIGHTING INSTRUCTIONS

FOR YOUR SAFETY READ BEFORE LIGHTING

⚠ WARNING: If you do not follow these instructions exactly, a fire or explosion may result causing property damage, personal injury or loss of life.

A. This appliance has a pilot which must be lighted by hand. When lighting the pilot, follow these instructions exactly.

B. BEFORE LIGHTING smell all around the appliance area for gas. Be sure to smell next to the floor because some gas is heavier than air and will settle on the floor.

WHAT TO DO IF YOU SMELL GAS

- **Do not try to light any appliance.**
- **Do not touch any electrical switch; do not use any phone in your building.**
- **Immediately call your gas supplier from a neighbor's phone. Follow the gas supplier's instructions.**
- **If you cannot reach your gas supplier, call the fire department.**

C. Use only your hand to push in or turn the gas control knob. Never use tools. If the knob will not push in or turn by hand, don't try to repair it; call a qualified service technician. Force or attempted repair may result in a fire or explosion.

D. Do not use this appliance if any part has been under water. Immediately call a qualified service technician to inspect the appliance and to replace any part of the control system and any gas control which has been under water.

LIGHTING INSTRUCTIONS

⚠ WARNING

- **Any glass doors shall be opened when the appliance is in operation.**
- **A fireplace screen must be in place when the appliance is operating and, unless other provisions for combustion air are provided, the screen shall have an opening(s) for introduction of combustion air.**

1. STOP! Read the safety information above.
2. Set the ON/OFF switch to "OFF."
3. Turn off all electric power to the appliance (if applicable).
4. Push in gas control knob slightly and turn clockwise to "OFF."
5. Wait ten (10) minutes to clear out any gas. Then smell for gas, including near the floor. If you smell gas, STOP! follow "B" in the safety information above. If you do not smell gas, go to the next step. **NOTE:** Knob cannot be turned from "PILOT" to "OFF" unless knob is pushed in slightly. Do not force.
6. Find pilot - follow metal tube from gas control. The pilot is in front of the middle log on the right side.
7. Turn gas control knob counterclockwise to "PILOT."

GAS CONTROL KNOB SHOWN IN "OFF" POSITION.

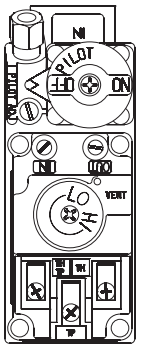

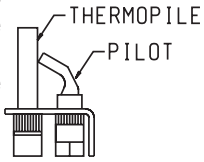

8. Push in control knob all the way and hold in. Immediately light the pilot with a match and lighter rod that is provided with the burner. Continue to hold the control knob in for about one (1) minute after the pilot is lit. Release knob, and it will pop back up. Pilot should remain lit. If it goes out, repeat steps 4 through 8.

   If knob does not pop up when released, stop and immediately call a qualified service technician or gas supplier.

   If the pilot will not stay lit after several tries, turn the gas control knob to "OFF" and call your service technician or gas supplier.
9. Turn gas control knob counter clockwise to "ON."
10. Set the ON/OFF switch to "ON."

TO TURN OFF GAS TO APPLIANCE

1. **Set the ON/OFF switch to "OFF".**
2. **Push in gas control knob slightly and turn clockwise to "OFF". Do not force.**

PILOT AND MAIN BURNER FLAME CHARACTERISTICS

Pilot Flame Pattern (Figure 4)
Figure 4 shows a correct pilot flame pattern. The correct flame will be blue and will extend beyond the thermopile. The flame will surround the thermopile just below the tip. A slight yellow flame may occur where the pilot flame and main burner flame meet.

After use, cleaning of the pilot burner may be required for the proper flame. The pilot orifice can be cleaned with high pressure air or by placing under running water. Pilot orifice must be dry before replacement. Use a pipe cleaner to clean inside the pilot after the pilot orifice has been removed.

To Remove Pilot Orifice
1. Disconnect the pilot supply line at the pilot burner.
2. Remove pilot orifice from pilot burner. It may be necessary to tap on pilot burner in order to remove the pilot orifice.

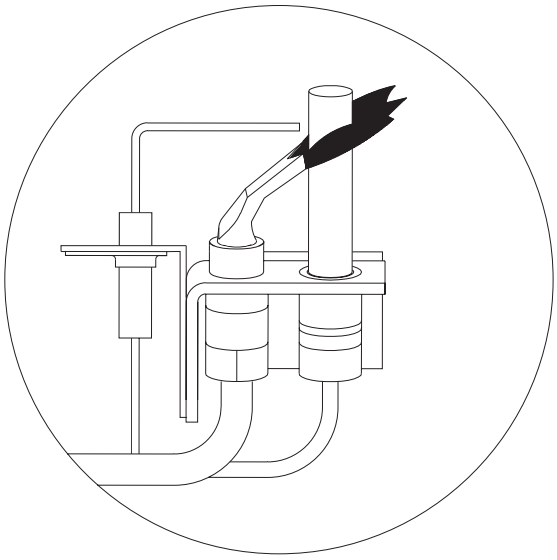

Pilot Flame Pattern
Figure 4

If pilot flame pattern is incorrect
- See Troubleshooting, page 17.

Main Burner Flame Pattern
The main burner flame will be completely yellow.
Main Burner Flame Ignition and Extinction
When the main burner is ignited it will take a few seconds for the full flame pattern to develop.

When the main burner is extinguished it will take a few seconds for the flames to disappear.

CLEANING AND SERVICING

Keep the control compartment, logs and burner area surrounding the logs clean.

THE LOGS CAN GET VERY HOT— HANDLE ONLY WHEN COOL.

Always keep the appliance area clear and free from combustible materials, gasoline, and other flammable vapors and liquids.

Never obstruct the flow of combustion and ventilation air. Keep the front of the appliance clear of all obstacles and materials.

Cleaning Instructions
This appliance is built using mostly high-grade stainless steel to resist rust-through. In outdoor applications, all stainless steel will develop a dull patina and, depending on the local environment and on the materials used in the installation, may develop some surface oxidation (rust). This does not affect the performance of the fireplace, and does not require any action to correct. If you prefer keeping your fireplace front looking factory-fresh, clean it as required with stainless steel cleaner.

When installation application includes highly acidic applications such as mortar or stone etching, do not remove the protective PVC film from the stainless steel until after this application is complete. Once the film has been removed we recommend that the appliance be cleaned with a stainless steel cleaner immediately.

Please note that areas where the film has been formed (corners, hems, etc.) may require extra cleaning due to the properties of the film. Ensure that all protective film has been removed from the fireplace prior to burning the appliance.

ONR(42,30) WIRING

Thermostats are not approved on vented decorated appliances.

Label all wires prior to disconnection when servicing controls. Wiring errors can cause improper and dangerous operation. Verify proper operation after servicing.

ONR gas valve does not require 24 or 110 volts. See Figure 5 to provide optional wall switch or remote control.

It is important to use wire of a gauge proper for the length of the wire:

RECOMMENDED WIRE GAUGES

Maximum Length	*Wire Gauge*
1' to 10'	18
10' to 25'	16
25' to 35'	14

Use the two leads (black wires) from **ON/OFF** switch to attach optional components.

Check System Operation
Millivolt system and all individual components may be checked with a millivolt meter 0-1000 MV range.

750 Millivolt System
When you ignite the pilot, the thermocouple produces millivolts (electrical current) which energizes the magnet in the gas valve. After 30 seconds to 1 minute time period you can release the gas control knob and the pilot will stay ON. Allow your pilot flame to operate an additional one (1) to two (2) minutes before you turn the gas control knob from the PILOT position to the ON position. This time period allows the millivolts (electrical current) to buildup to a sufficient level allowing the gas control to operate properly.

Millivolt Control
The valve regulator controls the burner pressure which should be checked at the pressure test point. Turn captured screw counter clockwise 2 or 3 turns and then place tubing to pressure gauge over test point (Use test point “A” closest to control knob). After taking pressure reading, be sure and turn captured screw clockwise firmly to re-seal. Do not over torque. Check for gas leaks.

Remote Receiver - (24, 30)
Use the following steps to place the **remote receiver** adjacent to the gas valve.

Attention:
1. The remote receiver **can not** be placed behind the gas valve and burner assembly.
2. When facing the appliance, the remote receiver must be placed in the **right** side firebox, toward the front.

***NOTICE*:** Do not let remote control receiver come in contact with burner assembly.

Refer to remote control installation and operating instructions for more details on remote control.

Wiring Diagram

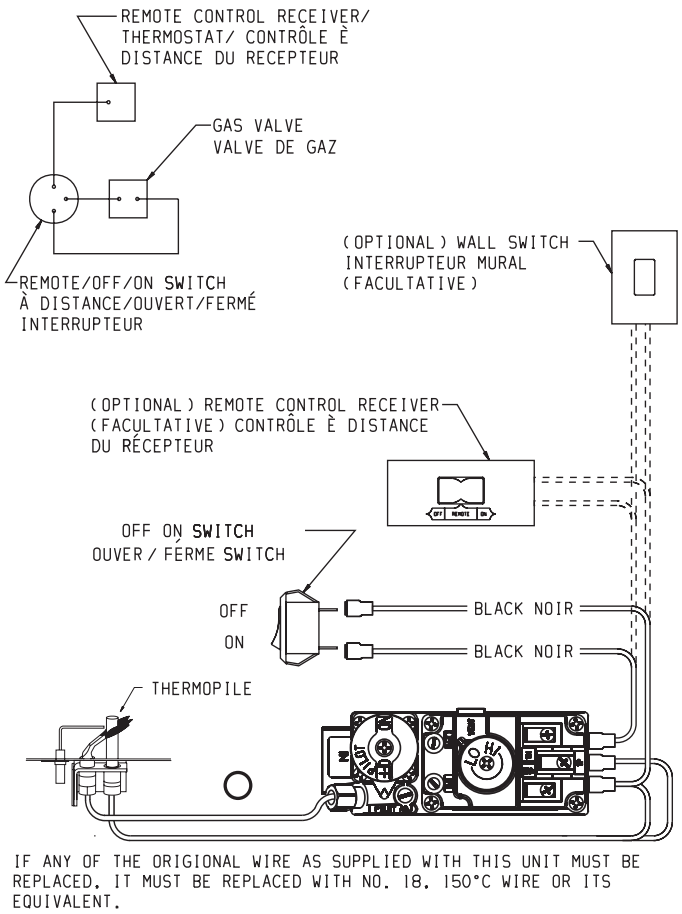

Figure 5

ONR
***NOTICE*:** Connect one - 1/4" terminals onto the TH terminal on valve. Cut off one 1/4-inch terminal. Strip wire back about 1/2-inch and connect stripped end to TH/TP terminal. Place decorative log to **right** of the gas valve and burner assembly.
When connecting to remote receiver, cut off 1/4" terminals from wires attached to ON/OFF switch. Strip wires back about 1/4". Connect stripped ends into remote receiver.

Note: The fireplace may be operated without the remote by connecting the brown control module wires to a wall switch. The remote/off switch on the control module must be in the "OFF" posisition.

REMOTE CONTROL INSTALLATION & OPERATION

TWO-FUNCTION WIRELESS REMOTE CONTROL SYSTEM
FOR ON/OFF-HI/LO OPERATION OF THE AF-4000 GAS CONTROL VALVE

IF YOU CANNOT READ OR UNDERSTAND THESE INSTALLATION INSTRUCTIONS DO NOT ATTEMPT TO OPERATE

INTRODUCTION

This remote control system was developed to provide a safe, reliable, and user-friendly remote control system for use with the AF-4000 gas control valve used with some gas heating appliances. The system operates on radio frequencies (RF) within a 20' range using non-directional signals. The system operates on one of 255 security codes that are programmed into the transmitter at the factory; the remote receiver must learn the transmitter code prior to initial use.

TRANSMITTER

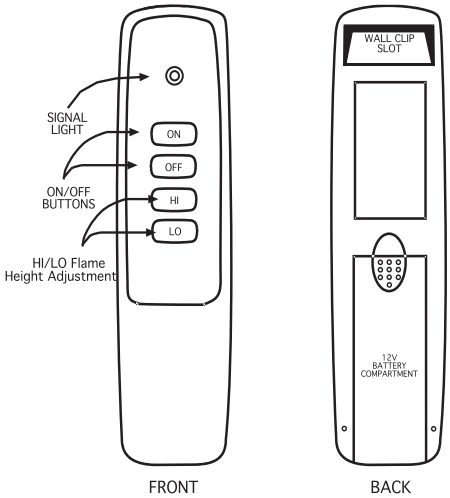

This remote control TRANSMITTER offers the user a battery-operated hand held control to operate the AF-4000 control module functions that are used with some decorative gas fire-places and other gas heating appliances.

The transmitter operates with a 12V battery (Included) made specifically for remote controls and electronic lighters. Before using the transmitter, install the 12-volt (A-23) battery in the battery compartment.

It is recommended that ALKALINE batteries always be used for longer battery life and maximum operational performance.

The transmitter has ON/OFF and HI/LO functions that are activated by pressing the button on the face of the transmitter. When a button on the transmitter is pressed, a signal light on the transmitter illuminates to verify that a signal is being sent. Upon initial use, there may be a delay of three seconds before the remote receiver will respond to the transmitter. This is part of the system's design. If the signal light does not illuminate, check the position of the transmitter's battery.

MATCHING SECURITY CODES

Each transmitter can use one of 255 unique security codes. It may be necessary to program (LEARN FUNCTION) the module to accept the transmitter security code upon initial use, if batteries are replaced, or if a replacement transmitter is purchased from your dealer or the factory. In order for the module to accept the transmitter security code, be sure the slide button on the module is in the REMOTE position; the module will NOT "LEARN" if the slide switch is in the OFF position. Press and release the LEARN button on the module to accept the transmitter security code and then pressing any button on the transmitter. A change in the beeping pattern, at the module, indicates the transmitter's code has been accepted into the module. When an existing module has accepted the new transmitter code, the new security code will replace the old one.
The microprocessor that controls the security code matching procedure is controlled by a timing function. If you are unsuccessful in matching the security code on the first attempt, wait 1 - 2 minutes before trying again - this delay allows the microprocessor to reset its timer circuitry - and try up to two or three more times.

OPERATION

1. This remote control will operate the AF-4000 gas control valves ON/OFF and flame height HI/LO of the main burner.
2. When the ON button is depressed the transmitter sends a RF signal to the module. The module then sends 3 volts of power to the internal solenoid. The internal solenoid then opens the gas flow to the main burner ON/OFF. The system uses a pulse or continuous 3 volts DC power to operate the flame HI/LO solenoid or flame HI/LOW DC motor drive.

BATTERY LIFE

Life expectancy of the alkaline batteries in the RCAF-3 TX can be up to 12 months depending on use of the solenoid function. Check and replace all batteries annually. The transmitter should operate with as little as 9.0 volts battery power.

SPECIFICATIONS

BATTERIES: Transmitter 12V - (A23)
Operating Frequency: 303.8 MHZ

FCC ID No.'s: transmitter K9I1001
Canadian ISC ID No.'s: transmitter - 2439 102 728

FCC REQUIREMENTS
NOTE: THE MANUFACTURER IS NOT RESPONSIBLE FOR ANY RADIO OR TV INTERFERENCE CAUSED BY UNAUTHORIZED MODIFICATIONS TO THIS EQUIPMENT. SUCH MODIFICATIONS COULD VOID THE USER'S AUTHORITY TO OPERATE THE EQUIPMENT.

TROUBLESHOOTING

SYMPTOMS-POSSIBLE CAUSES AND CORRECTIONS

1. **Match will not light pilot.**
   a. Main shut-off valve closed.
      - Make sure that the shut-off valve located on the pipe supplying gas to the fireplace is open.

   b. Air in the gas line.
      - Light a match, turn valve knob to "PILOT" position and depress, keep match near pilot burner until it lights.

   c. Valve knob in "OFF" position.
      - Turn valve knob to "PILOT" position and depress, keep match near pilot burner until it lights.

   d. Pilot orifice plugged up, not allowing gas to flow.
      - This repair requires tools and some degree of experience. Ask serviceman for assistance.

   e. No gas supply to the fireplace.
      - Check plumbing to see if gas fireplace has been hooked up to the gas supply line.
      - Propane tanks is empty.

2. **Pilot will not stay lit after carefully following lighting instructions for Models.**
   a. Defective pilot generator (thermopile), remote wall switch.
      - Check pilot flame. Must impinge on thermopile. Clean and or adjust pilot for maximum flame impingement on thermopile.
      - Be sure wire connections from thermopile at gas valve terminals are tight and thermopile is fully inserted into pilot bracket.
      - One of the wall switch wires may be grounded. Remove wall switch wires from valve terminals if pilot now stays lit, trace wall switch wiring for ground. May be grounded to appliance or gas supply.
      - Check thermopile with millivolt meter. Take reading at thermopile terminals of gas valve. Should read 325 millivolts minimum while holding valve knob depressed in pilot position and wall switch "Off." Replace faulty thermopile if reading is below specified minimum.

   b. Defective automatic valve operator — Turn valve knob to "On." Place wall switch to "On" millivolt meter should read greater than 100 M.V. If the reading is okay and the burner does not come on, replace the gas valve.

3. **Pilot burning, no gas to burner, valve knob "On," wall switch "On."**
   a. Wall switch or wires defective.
      - Check wall switch and wires for proper connections. Jumper wire cross terminals at wall switch, if burner comes on, replace defective wall switch. If okay, jumper wires cross wall switch wires at valve, if burner comes on, wires are faulty or connections are bad.

   b. Thermopile may not be generating sufficient millivoltage.
      - Replace.

   c. Plugged burner orifice.
      - Check burner orifice for debris and remove.

4. **Frequent pilot outage problem.**
   a. Pilot flame may be too low or blowing (high) causing the pilot to drop out.
      - Clean and/or adjust flame for maximum flame impingement on thermopile or thermocouple.

PARTS VIEWS & LIST

ONI MODELS

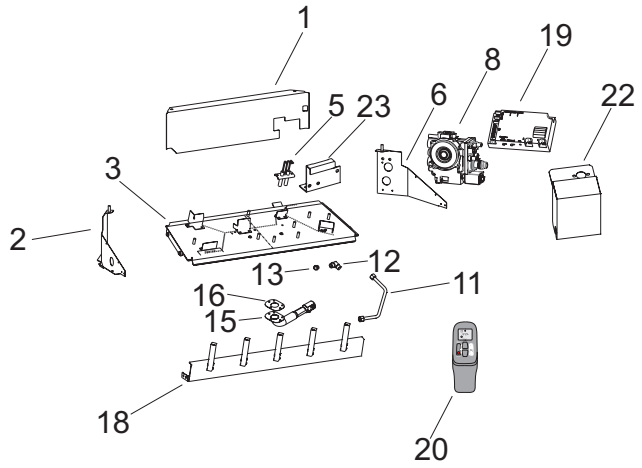

ONR MODELS

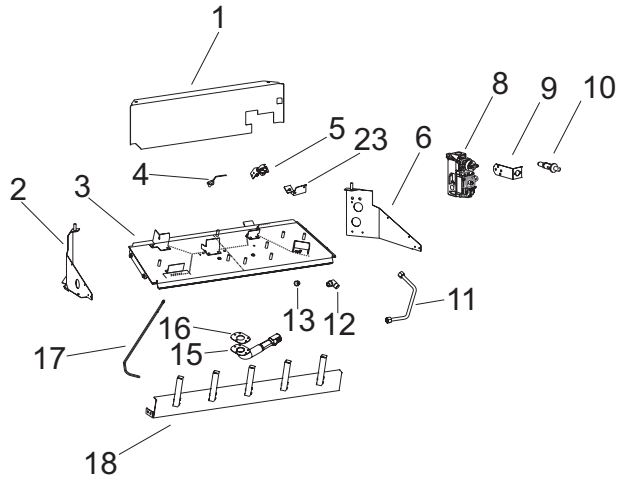

Index No.	Part No. ONI24	ONI30	ONR24	ONR30	Description
1	27934	27935	27934	27935	Rear Log Support
2	27930	27930	27930	27930	Burner Support Welded Assembly - Left
3	27936	27937	27936	27937	Burner Assembly
4	-	-	R1155	R1155	Electrode
5	-	-	R7157	R7157	Pilot - LP
5	-	-	R7158	R7158	Pilot - NAT
5	R10814	R10814	-	-	Spark Probe
6	27932	27932	27932	27932	Burner Support Welded Assembly - Right
8	R10810	R10810	R10408	R10408	Valve - LP
8	R12005	R12005	R10407	R10407	Valve - NAT
9	-	-	28393	28393	Piezo Bracket
10	-	-	R9761	R9761	Piezo
11	35039	35039	27282	27282	Tubing Inlet
12	P253	P253	P253	P253	Orifice Holder
13	P245	P300	P245	P276	Orifice - LP
13	P209	P280	P209	P280	Orifice - NAT
15	R11979	R11979	R11979	R10806	Venturi Tube
16	R11977	R11977	R11977	R10602	Venturi Gasket
17	-	-	28100	28100	Pilot Tubing
18	28398	28399	28398	28399	Grate Assembly
19	R10811	R10811	-	-	Module
20	R10815	R10815	-	-	Remote Control Transmitter
21	R10813	R10813	-	-	Battery Pack
22	34495	34495	-	-	Electronic Control Module Shield
23	34502	34502	28088	28088	Probe Bracket
N/S	-	-	R5910	R5910	Log/Switch Assembly
N/S	R10812	R10812	-	-	Wire Harness
N/S	33640	33640	28394	28394	Valve Bracket
N/S	R10808	R10808	R10808	R10808	Air Shutter

N/S - Not Shown

USE ONLY MANUFACTURER'S REPLACEMENT PARTS. USE OF ANY OTHER PARTS COULD CAUSE INJURY OR DEATH.

MASTER PARTS DISTRIBUTOR LIST

To Order Parts Under Warranty, please contact your local Empire dealer. See the dealer locator at www.empirecomfort.com. To provide warranty service, your dealer will need your name and address, purchase date and serial number, and the nature of the problem with the unit.

To Order Parts After the Warranty Period, please contact your dealer or one of the Master Parts Distributors listed below. This list changes from time to time. For the current list, please click on the Master Parts button at www.empirecomfort.com. Please note: Master Parts Distributors are independent businesses that stock the most commonly ordered Original Equipment repair parts for Heaters, Grills, and Fireplaces manufactured by Empire Comfort Systems Inc.

Dey Distributing
1401 Willow Lake Boulevard
Vadnais Heights, MN 55101

Phone: 651-490-9191
Toll Free: 800-397-1339
Website: www.deydistributing.com
Parts: Heater, Hearth and Grills

Victor Division of F. W. Webb Company
200 Locust Street
Hartford, CT 06114

Phone: 860-722-2433
Toll Free: 800-243-9360
Fax: 860-293-0479
Toll Free Fax: 800-274-2004
Websites: www.fwwebb.com & www.victormfg.com
Parts: Heater, Hearth and Grills

East Coast Energy Products
10 East Route 36
West Long Branch, NJ 07764

Phone: 732-870-8809
Toll Free: 800-755-8809
Fax: 732-870-8811
Website: www.eastcoastenergy.com
Parts: Heater, Hearth and Grills

HOW TO ORDER REPAIR PARTS

Parts Not Under Warranty

Parts can be ordered through your Service Person, Dealer, or a Master Parts Distributor. See this page for the Master Parts Distributors list. For best results, the **service person or dealer** should order parts through the distributor. Parts can be shipped directly to the **service person/dealer**.

Warranty Parts

Warranty parts will need a proof of purchase and can be ordered by your Service Person or Dealer. Proof of purchase is **required** for warranty parts.

All parts listed in the Parts List have a Part Number. When ordering parts, first obtain the Model Number and Serial Number from the name plate on your equipment. Then determine the Part Number (**not** the Index Number) and the Description of each part from the following illustration and part list. Be sure to give all this information . . .

Appliance Model Number _____ Part Description _____

Appliance Serial Number _____ Part Number _____

Type of Gas (Propane or Natural) _____

Do not order bolts, screws, washers or nuts. They are standard hardware items and can be purchased at any local hardware store.

Shipments contingent upon strikes, fires and all causes beyond our control.

WARRANTY TERMS

Empire Comfort Systems Inc. warranties this hearth product to be free from defects at the time of purchase and for the periods specified below. Hearth products must be installed by a qualified technician and must be maintained and operated safely, in accordance with the instructions in the owner's manual. This warranty applies to the original purchaser only and is not transferable. All warranty repairs must be accomplished by a qualified gas appliance technician.

Limited Five-Year Parts Warranty – All Components
(Except Remote Controls, Thermostats, Accessories and Replacement Parts)
Should any part fail because of defective workmanship or material within five years from the date of purchase, Empire will repair or replace at Empire's option.

Limited One-Year Parts Warranty – Remote Controls, Thermostats, Accessories, and Parts
Should any remote control, thermostat, accessory, or other part fail because of defective workmanship within one year from the date of purchase, Empire will repair or replace at Empire's option.

Duties of the Owner
The appliance must be installed by a qualified installer and operated in accordance with the instructions furnished with the appliance. A bill of sale, cancelled check, or payment record should be kept to verify purchase date and establish warranty period. Ready access to the appliance for service.

What Is Not Covered
Damages that might result from the use, misuse, or improper installation of this appliance.
Travel, diagnostic costs and freight charges on warranted parts to and from the factory.
Claims that do not involve defective workmanship or materials.
Unauthorized service or parts replacements.
Removal and reinstallation cost.
Inoperable due to improper or lack of maintenance.

How To Get Service
To make a claim under this warranty, please have your receipt available and contact your installing dealer. Provide the dealer with the model number, serial number, type of gas, and purchase verification. The installing dealer is responsible for providing service and will contact the factory to initiate any warranted parts replacements. Empire will make replacement parts available at the factory. Shipping expenses are not covered.
If, after contacting your Empire dealer, service received has not been satisfactory, contact: Consumer Relations Department, Empire Comfort Systems Inc., PO Box 529, Belleville, Illinois 62222, or send an e-mail to info@empirecomfort.com with "Consumer Relations" in the subject line.

Your Rights Under State Law
This warranty gives you specific legal rights, and you may also have other rights, which vary from state to state.

EMPIRE
COMFORT SYSTEMS

Empire Comfort Systems Inc.
Belleville, Illinois
If you have a general question about our products, please e-mail us at info@empirecomfort.com.
If you have a service or repair question, please contact your dealer.

www.empirecomfort.com