This Owner's Manual is provided and hosted by Appliance Factory Parts.

Appliance Factory Parts
Experts in BBQ, Humidifier, & Appliance Parts
1-800-955-7075

White Mountain Hearth DVP30CC30NATN-2 Owner's Manual

Shop genuine replacement parts for White Mountain Hearth DVP30CC30NATN-2

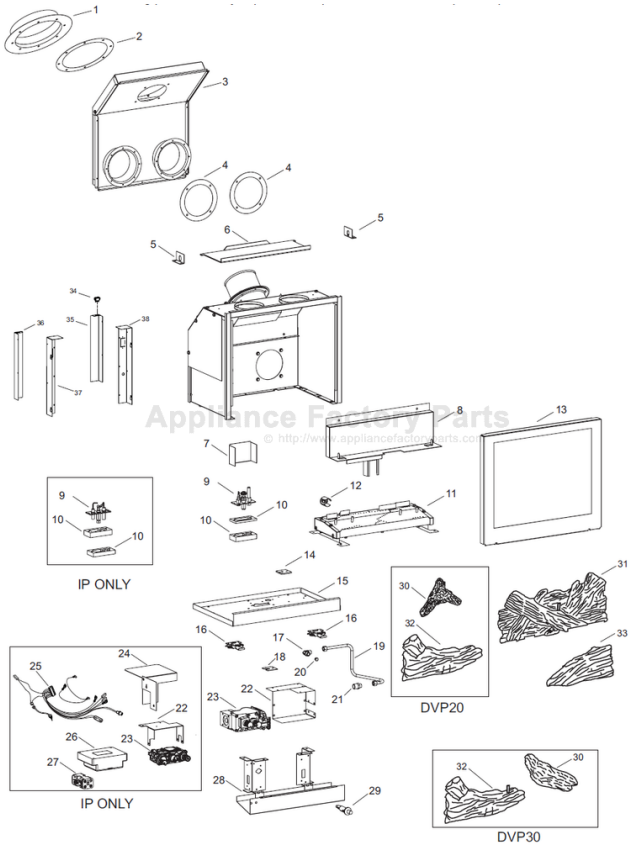

Find Your White Mountain Hearth Fireplace Parts - Select From 539 Models

-------- Manual continues below --------

EMPIRE
Cast Iron Stoves

INSTALLATION INSTRUCTIONS AND OWNER'S MANUAL

INSTALLER: Leave this manual with the appliance.
CONSUMER: Retain this manual for future reference.

⚠ WARNING

Improper installation, adjustment, alteration, service or maintenance can cause injury or property damage. Refer to this manual. For assistance or additional information consult a qualified installer, service agency, or the gas supplier.

⚠ WARNING

FIRE OR EXPLOSION HAZARD
Failure to follow safety warnings exactly could result in serious injury, death or property damage.

- **Do not store or use gasoline or other flammable vapors and liquids in the vicinity of this or any other appliance.**
- **WHAT TO DO IF YOU SMELL GAS**
  - **Do not try to light any appliance.**
  - **Do not touch any electrical switch; do not use any phone in your building.**
  - **Leave the building immediately.**
  - **Immediately call your gas supplier from a neighbor's phone. Follow the gas supplier's instructions.**
  - **If you cannot reach your gas supplier, call the fire department.**
- **Installation and service must be performed by a qualified installer, service agency or the gas supplier.**

CAST IRON DIRECT VENT STOVE

MODELS:

DVP20CC(30,70)(B,F,M)(N,P)-2

DVP30CC(30,70)(B,F,M,S,W)(N,P)-2

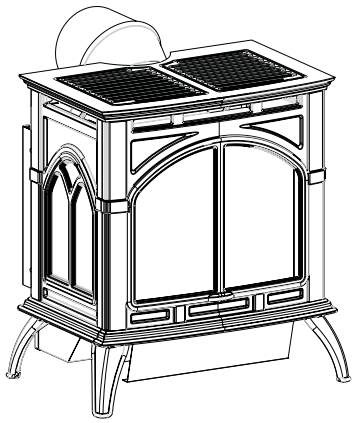

GAS-FIRED
C UL US
LISTED

This appliance may be installed in an aftermarket permanently located, manufactured home (USA only) or mobile home, where not prohibited by local codes.

This appliance is only for use with the type of gas indicated on the rating plate. This appliance is not convertible for use with other gases, unless a certified kit is used.

⚠ WARNING

HOT GLASS WILL CAUSE BURNS.
DO NOT TOUCH GLASS UNTIL COOLED.
NEVER ALLOW CHILDREN TO TOUCH GLASS.

A barrier designed to reduce the risk of burns from the hot viewing glass is provided with this appliance and shall be installed for the protection of children and other at-risk individuals.

NATIONAL FIREPLACE INSTITUTE
NFI
CERTIFIED
www.nficertified.org

We suggest that our gas hearth products be installed and serviced by professionals who are certified in the U.S. by the National Fireplace Institute® (NFI) as NFI Gas Specialists.

TABLE OF CONTENTS

SECTION	PAGE
IMPORTANT SAFETY INFORMATION	3
SAFETY INFORMATION FOR USERS OF LP-GAS	4
REQUIREMENTS FOR MASSACHUSETTS	5
INTRODUCTION	6
SPECIFICATIONS	7
GAS SUPPLY	8
CLEARANCES	9-10
VENTING STOVE	11-13
TERMINATION CLEARANCES	14
VENT CLEARANCES	15
VENT SYSTEM IDENTIFICATION	16
FRAMING AND FINISHING	17-18
HORIZONTAL TERMINATION	18
VERTICAL TERMINATION	19-20
DVP20CC LOG IDENTIFICATION	21
DVP20CC LOG PLACEMENT	22-27
DCP30CC LOG IDENTIFICATION	28
DVP20CC LOG PLACEMENT	29-33
OPERATING INSTRUCTIONS	34
MAIN BURNER FLAME CHARACTERISTICS	35
WIRING	36
MILLIVOLT LIGHTING INSTRUCTIONS	37
MILLIVOLT WIRING	38
MILLIVOLT TROUBLESHOOTING	39
IP OPERATING INSTRUCTIONS	40
IP ELECTRONIC SYSTEM WIRING DIAGRAM	41
INTERMITTENT PILOT LIGHTING INSTRUCTIONS	42
INTERMITTENT CONTROL SYSTEM TROUBLESHOOTING	43-45
MAINTENANCE	46
MAINTENANCE AND SERVICE	47
MASTER PARTS DISTRIBUTOR LIST	48
HOW TO ORDER REPAIR PARTS	48
DVP20CC(30,70)PARTS LIST	49
DVP20CC(30,70)PARTS VIEW	50
DVP30CC(30,70) PARTS LIST	51
DVP30CC(30,70) PARTS VIEW	52
CASTING PARTS LIST	53
CASTING PARTS VIEW	54
ACCESSORY SIDE SHELVES INSTALLATION INSTRUCTIONS	55
CIB3-1 OPTIONAL BLOWER INSTALLATION INSTRUCTIONS - DVP30CC	56-58
CIB4-1 OPTIONAL BLOWER INSTALLATION INSTRUCTIONS - DVP20CC	59-61
WARRANTY	62
QUICK REFERENCE GUIDE	63-64

IMPORTANT SAFETY INFORMATION

Before enclosing the vent pipe assembly, operate the appliance to ensure it is venting properly.

DO NOT OPERATE THIS APPLIANCE WITHOUT GLASS FRONT PANEL INSTALLED

- **This appliance must be installed on a flat, solid, continuous surface (e.g. wood, metal, concrete). This may be the floor, or it may be raised up on a platform to enhance its visual impact. The appliance may be installed on carpeting, tile, wood flooring or other combustible material as the appliance's base extends the width and depth of the appliance.**
- **Children and adults should be alerted to the hazards of high surface temperatures and should stay away to avoid burns or clothing ignition.**
- **Young children should be carefully supervised when they are in the same room as the appliance.**
- **Clothing or other flammable material should not be placed on or near the appliance.**
- **Adequate accessibility clearances for servicing and proper operation.**
- **This appliance must not share or be connected to a flue serving a separate solid-fuel burning appliance.**
- **Keep the area around your appliance clear of combustible materials, gasoline and other flammable vapor and liquids.**
- **Under no circumstances should any solid fuels (wood, coal, paper or cardboard etc.) be used in this appliance.**
- **The flow of combustion and ventilation air must not be obstructed in any way.**

- **Due to high temperatures the appliance should be located out of traffic and away from furniture and draperies.**
- **The glass front or any part removed for servicing the appliance must be replaced prior to operating the appliance. Work should be done by a qualified service person.**
- **Keep burner and control compartment clean.**
- **Vent cap is hot while stove is in operation.**
- **Installation and repair should be done by a QUALIFIED SERVICE PERSON. The appliance should be inspected before use and at least annually by a qualified service person. More frequent cleaning may be required due to excessive lint from carpeting, bedding materials, etc. It is imperative that control compartments, burners and circulating air passageways of the appliance be kept clean.**
- **DO NOT put anything around the stove that will obstruct the flow of ventilation air.**
- **Clearance in accordance with local installation codes and the requirements of the gas supplier.**
- **DO keep the appliance area clear and free from combustible material, gasoline and other flammable vapors and liquids.**
- **DO examine venting system periodically and replace damaged parts.**
- **DO make a periodic visual check of pilot and burners. Clean and replace damaged parts.**

⚠ CAUTION

The glass used in your stove is tempered glass. If the glass is cracked or damaged in any way, it should be replaced only with a complete glass frame assembly from Empire. See parts list on Pages 38 and 40 for ordering.

- **DO NOT use this stove if any part has been under water. Immediately call a qualified service technician to inspect the heater and to replace any part of the control system and any gas control which has been under water.**
- **Any safety screen or guard removed for servicing an appliance must be replaced prior to operating the appliance.**

SAFETY INFORMATION FOR USERS OF LP-GAS

Propane (LP-Gas) is a flammable gas which can cause fires and explosions. In its natural state, propane is odorless and colorless. You may not know all the following safety precautions which can protect both you and your family from an accident. Read them carefully now, then review them point by point with the members of your household. Someday when there may not be a minute to lose, everyone's safety will depend on knowing exactly what to do. If, after reading the following information, you feel you still need more information, please contact your gas supplier.

LP-GAS WARNING ODOR

If a gas leak happens, you should be able to smell the gas because of the odorant put in the LP-Gas.
That's your signal to go into immediate action!

- Do not operate electric switches, light matches, use your phone. Do not do anything that could ignite the gas.
- Get everyone out of the building, vehicle, trailer, or area. Do that IMMEDIATELY.
- Close all gas tank or cylinder supply valves.
- LP-Gas is heavier than air and may settle in low areas such as basements. When you have reason to suspect a gas leak, keep out of basements and other low areas. Stay out until firefighters declare them to be safe.
- Use your neighbor's phone and call a trained LP-Gas service person and the fire department. Even though you may not continue to smell gas, do not turn on the gas again. Do not re-enter the building, vehicle, trailer, or area.
- **Finally,** let the service man and firefighters check for escaped gas. Have them air out the area before you return. Properly trained LP-Gas service people should repair the leak, then check and relight the gas appliance for you.

NO ODOR DETECTED - ODOR FADE

Some people cannot smell well. Some people cannot smell the odor of the chemical put into the gas. You must find out if you can smell the odorant in propane. Smoking can decrease your ability to smell. Being around an odor for a time can affect your sensitivity or ability to detect that odor. Sometimes other odors in the area mask the gas odor. People may not smell the gas odor or their minds are on something else. Thinking about smelling a gas odor can make it easier to smell.

The odorant in LP-gas is colorless, and it can fade under some circumstances. For example, if there is an underground leak, the movement of the gas through soil can filter the odorant. Odorants in LP-Gas also are subject to oxidation. This fading can occur if there is rust inside the storage tank or in iron gas pipes.

The odorant in escaped gas can adsorb or absorb onto or into walls, masonry and other materials and fabrics in a room. That will take some of the odorant out of the gas, reducing its odor intensity.

LP-Gas may stratify in a closed area, and the odor intensity could vary at different levels. Since it is heavier than air, there may be more odor at lower levels. Always be sensitive to the slightest gas odor. If you detect any odor, treat it as a serious leak. Immediately go into action as instructed earlier.

SOME POINTS TO REMEMBER

- **Learn to recognize the odor of LP-gas.** Your local LP-Gas Dealer can give you a "Scratch and Sniff" pamphlet. Use it to find out what the propane odor smells like. If you suspect that your LP-Gas has a weak or abnormal odor, call your LP-Gas Dealer.
- If you are not qualified, do not light pilot lights, perform service, or make adjustments to appliances on the LP-Gas system. If you are qualified, consciously think about the odor of LP-Gas prior to and while lighting pilot lights or performing service or making adjustments.
- Sometimes a basement or a closed-up house has a musty smell that can cover up the LP-Gas odor. Do not try to light pilot lights, perform service, or make adjustments in an area where the conditions are such that you may not detect the odor if there has been a leak of LP-Gas.
- Odor fade, due to oxidation by rust or adsorption on walls of new cylinders and tanks, is possible. Therefore, people should be particularly alert and careful when new tanks or cylinders are placed in service. Odor fade can occur in new tanks, or reinstalled old tanks, if they are filled and allowed to set too long before refilling. Cylinders and tanks which have been out of service for a time may develop internal rust which will cause odor fade. If such conditions are suspected to exist, a periodic sniff test of the gas is advisable. **If you have any question about the gas odor, call your LP-gas dealer. A periodic sniff test of the LP-gas is a good safety measure under any condition.**
- If, at any time, you do not smell the LP-Gas odorant and you think you should, assume you have a leak. Then take the same immediate action recommended above for the occasion when you do detect the odorized LP-Gas.
- If you experience a complete "gas out," (the container is under no vapor pressure), turn the tank valve off immediately. If the container valve is left on, the container may draw in some air through openings such as pilot light orifices. If this occurs, some new internal rusting could occur. If the valve is left open, then treat the container as a new tank. Always be sure your container is under vapor pressure by turning it off at the container before it goes completely empty or having it refilled before it is completely empty.

REQUIREMENTS FOR MASSACHUSETTS

For all side wall horizontally vented gas fueled equipment installed in every dwelling, building or structure used in whole or in part for residential purposes, including those owned or operated by the Commonwealth and where the side wall exhaust vent termination is less than seven feet above finished grade in the area of the venting, including but not limited to decks and porches, the following requirements shall be satisfied:

1. INSTALLATION OF CARBON MONOXIDE DETECTORS. At the time of installation of the side wall horizontal vented gas fueled equipment, the installing plumber or gasfitter shall observe that a hard wired carbon monoxide detector with an alarm and battery back-up is installed on the floor level where the gas equipment is to be installed. In addition, the installing plumber or gasfitter shall observe that a battery operated or hard wired carbon monoxide detector with an alarm is installed on each additional level of the dwelling, building or structure served by the side wall horizontal vented gas fueled equipment. It shall be the responsibility of the property owner to secure the services of qualified licensed professionals for the installation of hard wired carbon monoxide detectors

   a. In the event that the side wall horizontally vented gas fueled equipment is installed in a crawl space or an attic, the hard wired carbon monoxide detector with alarm and battery back-up may be installed on the next adjacent floor level.

   b. In the event that the requirements of this subdivision can not be met at the time of completion of installation, the owner shall have a period of thirty days to comply with the above requirements; provided, however, that during said thirty day period, a battery operated carbon monoxide detector with an alarm shall be installed.

2. APPROVED CARBON MONOXIDE DETECTORS. Each carbon monoxide detector as required in accordance with the above provisions shall comply with NFPA 720 and be ANSI/UL 2034 listed and IAS certified.

3. SIGNAGE. A metal or plastic identification plate shall be permanently mounted to the exterior of the building at a minimum height of eight feet above grade directly in line with the exhaust vent terminal for the horizontally vented gas fueled heating appliance or equipment. The sign shall read, in print size no less than one-half inch in size, **"GAS VENT DIRECTLY BELOW. KEEP CLEAR OF ALL OBSTRUCTIONS".**

4. INSPECTION. The state or local gas inspector of the side wall horizontally vented gas fueled equipment shall not approve the installation unless, upon inspection, the inspector observes carbon monoxide detectors and signage installed in accordance with the provisions of 248 CMR 5.08(2)(a) 1 through 4.

   (b) EXEMPTIONS: The following equipment is exempt from 248 CMR 5.08(2)(a)1 through 4:

      1. The equipment listed in Chapter 10 entitled "Equipment Not Required To Be Vented" in the most current edition of NFPA 54 as adopted by the Board; and

      2. Product Approved side wall horizontally vented gas fueled equipment installed in a room or structure separate from the dwelling, building or structure used in whole or in part for residential purposes.

   (d) MANUFACTURER REQUIREMENTS - GAS EQUIPMENT VENTING SYSTEM NOT PROVIDED. When the manufacturer of a Product Approved side wall horizontally vented gas fueled equipment does not provide the parts for venting the flue gases, but identifies "special venting systems", the following requirements shall be satisfied by the manufacturer:

      1. The referenced "special venting system" instructions shall be included with the appliance or equipment installation instructions; and

      2. The "special venting systems" shall be Product Approved by the Board, and the instructions for that system shall include a parts list and detailed installation instruction.

   (e) A copy of all installation instructions for all Product Approved side wall horizontally vented gas fueled equipment, all venting instructions, all parts lists for venting instructions, and/or all venting design instructions shall remain with the appliance or equipment at the completion of the installation.

INTRODUCTION

Instructions to Installer

1. Installer must leave instruction manual with owner after installation.
2. Installer must have owner fill out and mail warranty card supplied with the stove.
3. Installer should show owner how to start and operate the stove.

This direct vent gas stove heater is designed to operate with all combustion air being siphoned from the outside of the building and all exhaust gases expelled to the outside of the building. The information contained in this manual pertains to all models and gas control systems unless otherwise noted.

⚠ WARNING

This unit is not for use with solid fuels.

Notice: During initial firing of this unit, its paint will bake out and smoke will occur. To prevent triggering of smoke alarms, ventilate the room in which the unit is installed.

Notice: Remove screw in valve cover. Screw is required to prevent shipping damage.

Appliance must not be connected to a chimney flue that is servicing a separate solid-fuel burning appliance.

Installation in Residential Garages

Gas utilization equipment in residential garages shall be installed so that all burners and burner ignition devices are located not less than 18" (457 mm) above the floor.

Such equipment shall be located, or protected, so it is not subject to physical damage by a moving vehicle.

Appliance Certification

This stove is design certified in accordance with American National Standard/CSA Standard ANSI Z.21-88/CSA 2.33 and by Underwriters Laboratories as a Direct Vent Gas Fireplace Heater and shall be installed according to these instructions.

Consult your local building code agency, prior to installation, to ensure compliance with local codes-including permits and inspections.

The stove, when installed with blower, must be electrically grounded in accordance with local codes or, in absence of local codes, with the *National Electric Code ANSI/NFPA 70* or Canadian Electric code, CSA C22.1, if an external electrical source is utilized.

These models may be installed in a bedroom or bed-sitting room in the U.S.A. and Canada.

Qualified Installing Agency

Installation and replacement of gas piping, gas utilization equipment or accessories and repair and servicing of equipment shall be performed only by a qualified agency. The term “qualified agency” means any individual, firm, corporation or company which either in person or through a representative is engaged in and is responsible for (a) the installation or replacement of gas piping or (b) the connection, installation, repair or servicing of equipment, who is experienced in such work, familiar with all precautions required and has complied with all the requirements of the authority having jurisdiction.

State of Massachusetts: The installation must be made by a licensed plumber or gas fitter in the Commonwealth of Massachusetts.

The installation must conform with local codes or, in the absence of local codes, with the *National Fuel Gas Code ANSI Z223.1/NFPA 54* Natural Gas and Propane Installation Code, or CSA B149.1 in Canada.*Available from the American National Standards Institute, Inc. 11 West 42nd St., New York, N.Y. 10036.*

⚠ WARNING

ANY CHANGE TO THIS STOVE OR ITS CONTROLS CAN BE DANGEROUS.
Improper installation or use of the stove can cause serious injury or death from fire, burns, explosions, or carbon monoxide poisoning.

Any alteration of the original design, installed other than as shown in these instructions or use with a type of gas not shown on the rating plate is the responsibility of the person and company making the change.

Important

All correspondence should refer to complete Model Number, Serial Number and type of gas.

High Altitude

When installing this unit at an elevation above 2000 feet (in the United States) it may be necessary to decrease the input rating by changing the existing burner orifice to a smaller size. Generally, input should be reduced 4 percent for each 1000 feet above sea level. However, if the heating value of the gas has been reduced, this general rule may not apply. Check with local gas utility for proper orifice size identification.

Canadian High Altitude

Altitude: 0-4500 feet (0-1370 m)

When installing this unit at an elevation above 4500 feet (in Canada), check with local authorities.

Consult your local gas utility for assistance in determining the proper orifice for location.

Preparation

This direct vent gas stove and its components are tested and safe when installed in accordance with this Installation Manual. Report to your dealer any parts damaged in shipment, specifically check glass condition. Do not install unit with damaged, incomplete, or substitute parts. Read all instructions before starting installation and follow these instructions carefully during installation to insure maximum benefit and safety. Failure to follow them will void your warranty and may present a fire hazard.

The warranty will be voided by, and the warranter disclaims any responsibility for the following actions:

- Installation of any damaged stove or vent system component.
- Modification of the stove or direct vent system.
- Installation other than as instructed by Empire Comfort Systems, Inc.
- Improper positioning of the logs or glass door.
- Installation and/or use of any component part not manufactured or approved by manufacturer.

SPECIFICATIONS

Model	DVP20CC		DVP30CC	
Gas Type	Natural Gas	LP	Natural Gas	LP
Input BTU/HR (KW/H) Max	19,500		26,500	
Input BTU/HR (KW/H) Min	13,500		18,000	21,000
Gas Inlet (Pipe)	3/8"		3/8"	
Orifice	2.15mm	55	39	1.55mm
Air Shutter Setting	1/8"	Full Open	3/16"	Full Open
Gas Supply Pressure Max	10.5" W.C. / 2.614 kPa	13.0" W.C. / 3.237 kPa	10.5" W.C. / 2.614 kPa	13.0" W.C. / 3.237 kPa
Gas Supply Pressure Min	4.5" W.C. / 1.121 kPa	11.0" W.C. / 2.739 kPa	4.5" W.C. / 1.121 kPa	11.0" W.C. / 2.739 kPa
Gas Supply Pressure Manifold	3.5" W.C. / .872 kPa	10.0" W.C. / 2.490 kPa	3.5" W.C. / .872 kPa	10.0" W.C. / 2.490 kPa
Height	24-1/8"		27-3/4"	
Width	21-1/2"		28-1/16"	
Depth	16-1/2"		18"	

Venting Accessories (Special Vent Kits - Simpson Duravent Can be purchased from Empire Comfort Systems Inc.)	
DVKHP (requires SD46DVAE45B)	Horizontal Vent Kit for DVP30CCLP Only (46DVA-24B, 46DVA-09B, 46DVA-08AB, 46DVA-DC, 46DVA-WT, 46DVA-HC, 46DVA-E90B)
DVK45LP	Horizontal Direct-Vent 45-Deg kit for DVP20CC LP Only (SD46DVAE45B, SD09261TB (adaptor 4x6 to 5x8), SD58DVADC, SD58DVAWT, SD58DVAHSCH)
DVK45NAT	Horizontal Direct-Vent 45-Deg kit for DVP20CC Nat Only (SD46DVAE45B, SD46DVA12B, SD-46DVADC, SD46DVAWT, SD46DVAHC)
DVKVP45	Vertical Direct-Vent 45-Deg kit for DVP20CC LP and Nat and DVP30CC Nat Only (SD46DVAE45B, SD46DVAE90B, SD46DVA12B, SD46DVA17B, SD46DVADC, SD46DVAWT, SD46DVAHC)

NOTE: On horizontal applications, snorkel kits may be used.
DVP20CC(LP,NAT) and DVP30CCNAT: SD-46DVASNK14 (14 inch pipe snorkel)
DVP30CCLP: SD-46DVASNK36 (36 inch pipe snorkel)

Accessories	
TMV	Millivolt Wall Thermostat - Reed Switch
FRBC	Battery Operated Remote Control
FRBTC	Battery Operated Remote Control with Thermostat
FREC	Electric Remote Control
FWS	Wall Switch
FRBTP	7-Day Programmable Remote
TRW	Remote Wall Thermostat
CIB3	Automatic Blower (DVP30CC)
CIB4	Automatic Blower (DVP20CC)
Stone Inlay Replaces Standard Grill Top - DVP30CC30 Models ONLY	
CSI-8V	Stone Inlay - Venetian Gold
CSI-9A	Stone Inlay - Adobe Frost
CSI-10M	Stone Inlay - Patina Mocha
CSI-11G	Stone Inlay - Temple Gray
CSI-12A	Stone Inlay - American Beauty
Cast Iron Stove Side Shelf Kit (Includes Left & Right)	
CSK-B	Side Shelf Kit - Porcelain Black
CSK-F	Side Shelf Kit - Matte Black
CSK-M	Side Shelf Kit -Porcelain Mahogany
CSK-S	Side Shelf Kit - Porcelain Sand (DVP30CC Only)
CSK-W	Side Shelf Kit - Matte Pewter (DVP30CC Only)

GAS SUPPLY

Consult the current National Fuel Gas Code, ANSI Z223.1 CAN/CGA-B149 (.1 or .2) installation code.

Recommended Gas Pipe Diameter

Pipe Length	Schedule 40 Pipe Inside Diameter		Tubing, Type L Outside Diameter	
	Nat.	L.P.	Nat.	L.P.
0-10 feet 0-3 meters	1/2” 12.7 mm	3/8” 9.5 mm	1/2” 12.7 mm	3/8” 9.5 mm
10-40 feet 4-12 meters	1/2” 12.7 mm	1/2” 12.7 mm	5/8” 15.9 mm	1/2” 12.7 mm
40-100 feet 13-30 meters	1/2” 12.7 mm	1/2” 12.7 mm	3/4” 19 mm	1/2” 12.7 mm
100-150 feet 31-46 meters	3/4” 19 mm	1/2” 12.7 mm	7/8” 22.2 mm	3/4” 19 mm

NOTE: Never use plastic pipe. Check to confirm whether your local codes allow copper tubing or galvanized.

Note: Since some municipalities have additional local codes, it is always best to consult your local authority and installation code.

The use of the following gas connectors is recommended:

— ANS Z21.24 Appliance Connectors of Corrugated Metal Tubing and Fittings

— ANS Z21.45 Assembled Flexible Appliance Connectors of Other Than All-Metal Construction

The above connectors may be used if acceptable by the authority having jurisdiction. The state of Massachusetts requires that a flexible appliance connector cannot exceed three feet in length.

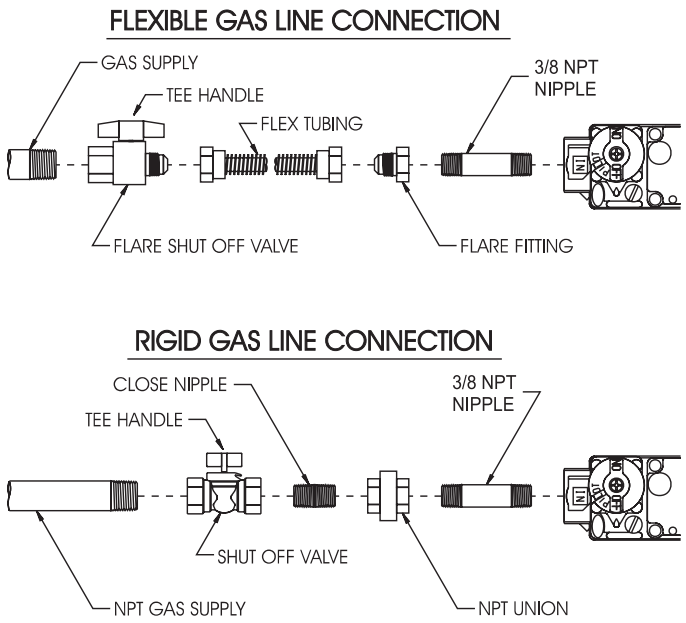

Figure 1

Installing a New Main Gas Cock

Each appliance should have its own manual gas cock.

A manual main gas cock should be located in the vicinity of the unit. Where none exists, or where its size or location is not adequate, contact your local authorized installer for installation or relocation.

Compounds used on threaded joints of gas piping shall be resistant to the action of liquefied petroleum gases. The gas lines must be checked for leaks by the installer. This should be done with a soap solution watching for bubbles on all exposed connections, and if unexposed, a pressure test should be made.

Never use an exposed flame to check for leaks. Appliance must be disconnected from piping at inlet of control valve and pipe capped or plugged for pressure test. Never pressure test with appliance connected; control valve will sustain damage!

Note: The gas control is equipped with a captured screw type pressure test point, therefore it is not necessary to provide a 1/8" test point up stream of the control.

A gas valve and ground joint union should be installed in the gas line upstream of the gas control to aid in servicing. It is required by the National Fuel Gas Code that a drip line be installed near the gas inlet. This should consist of a vertical length of pipe tee connected into the gas line that is capped on the bottom in which condensation and foreign particles may collect.

When using copper or flex connector use only approved fittings. **Always provide a union** so that gas line can be easily disconnected for burner servicing.

The appliance and it's individual shut off valve must be disconnected from supply piping system during any pressure testing of that system at test pressures in excess of 1/2 psig (3.5 kPa).

The appliance must be isolated from the gas supply piping system by closing its individual manual shut off valve during any pressure testing of the gas supply piping system at test pressures equal to or less than 1/2 psig (3.5 kPa).

⚠ CAUTION

If one of the procedures results in pressures in excess of 1/2 psig (14" w.c.) (3.5 kPa) on the stove gas valve, it will result in a hazardous condition.

Checking Manifold Pressure

Both Propane and Natural gas valves have a built-in pressure regulator in the gas valve. Natural gas models will have a manifold pressure of approximately 3.5" w.c. (.871 kPa) for maximum input or 1.7" w.c. (.423 kPa) for minimum input at the valve outlet with the inlet pressure to the valve from a minimum of 5.0" w.c. (1.245 kPa) for the purpose of input adjustment to a maximum of 10.5" w.c. (2.615 kPa). Propane gas models will have a manifold pressure approximately 10.0" w.c. (2.49 kPa) for maximum input or 5.9" w.c. (1.469 kPa) for minimum input at the valve outlet with the inlet pressure to the valve from a minimum of 11.0" w.c. (2.739 kPa) for the purpose of input adjustment to a maximum of 13.0" w.c. (3.237 kPa).

A 1/8" (3 mm) N.P.T. plugged tapping, accessible for test gauge connection, is located on the outlet side of the gas control.

CLEARANCES

In selecting a location for installation, it is necessary to provide adequate accessibility clearances for servicing and proper operation.

Locating and Venting the Direct Vent Stove

Clearances: When facing the front of the direct vent stove the minimum clearances to combustible construction (material) are the following:

Top of appliance (ceiling)	36" (914.4 mm)
Rear Wall	2" (50.8 mm)
Side Wall	6" (152.4 mm)
Heater Corners (45° angle) to Wall	4" (101.6 mm)
Floor	0" (0 mm)

Installation on Rugs and Tile

This appliance must be installed on a flat, solid, continuous surface (e.g. wood, metal, concrete). This may be the floor, or it may be raised up on a platform to enhance its visual impact. The continuous surface may be covered with carpeting, vinyl, wood flooring or other combustible material.

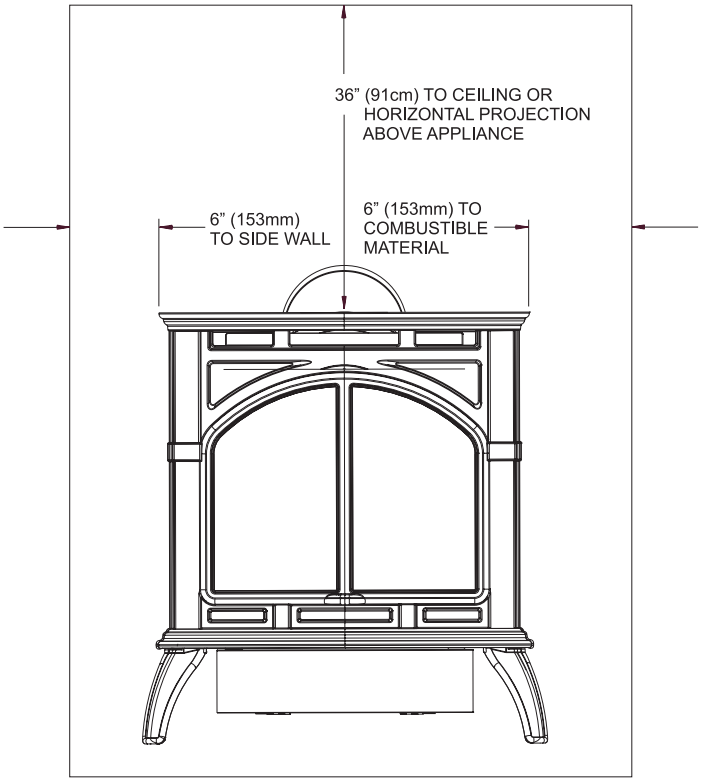

Figure 2

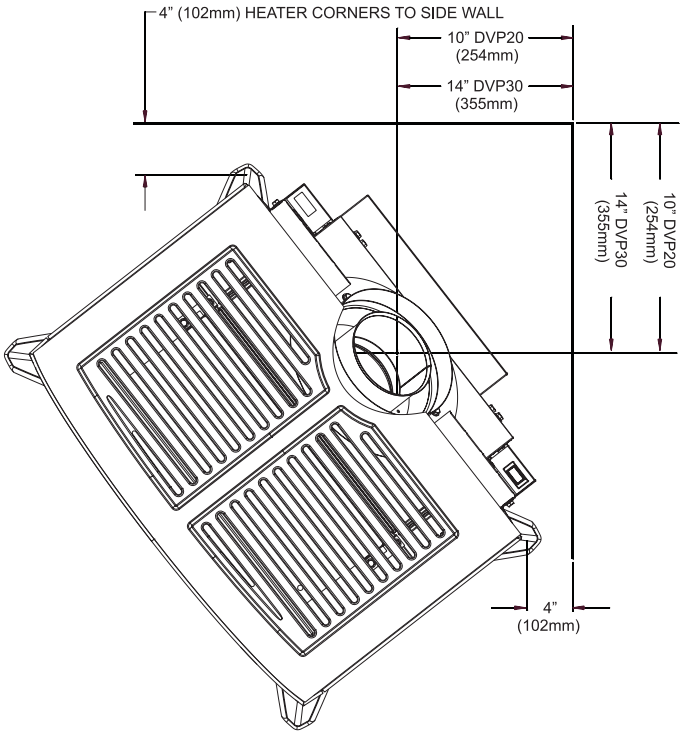

NOTE: HEATER INSTALLED AT 45° ANGLE IN CORNER

Figure 3

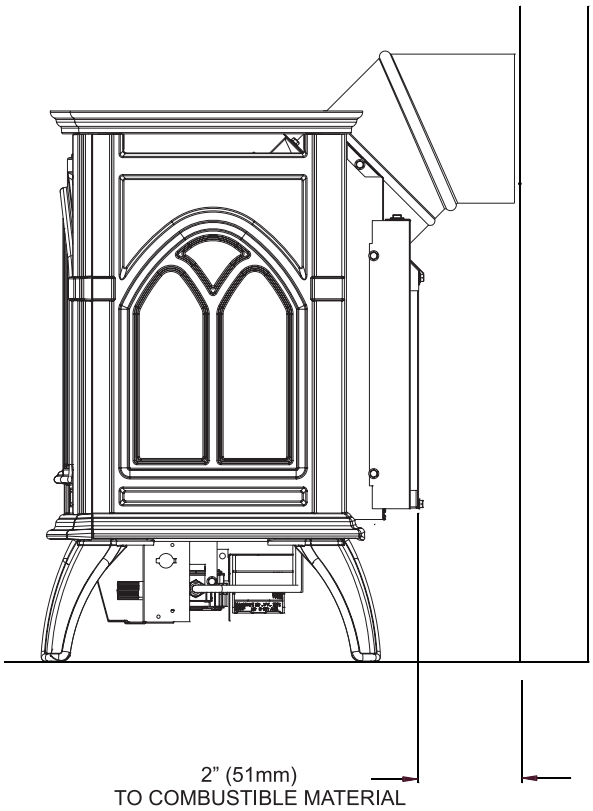

Figure 4

CLEARANCES (cont.)

Special Vent Systems

The following vent systems are acceptable for use with the DVP(20,30)CC stoves:
Empire Horizontal Round Termination Kits - DVVK-4RE, DVVK-4REVS
Empire Horizontal Round Flex Termination Kits - DVVK-4FRE, DVVK-4FREVS
Simpson Duravent® GS 4" - 6 5/8"
American Metal® 4" - 6 5/8"
Selkirk Direct-Temp® 4" - 6 5/8"
ICC Inc. Excel 4" - 6 5/8"
MetalFab SureSeal® 4" - 6 5/8"
BDM Manufacturing 4" - 6 5/8"
Note: American Metal®, Selkirk Direct-Temp®, MetalFab SureSeal®, BDM Manufacturing, and ICC Inc. Excel CAN NOT be used in side wall horizontal vent installations in the state of Massachusetts.

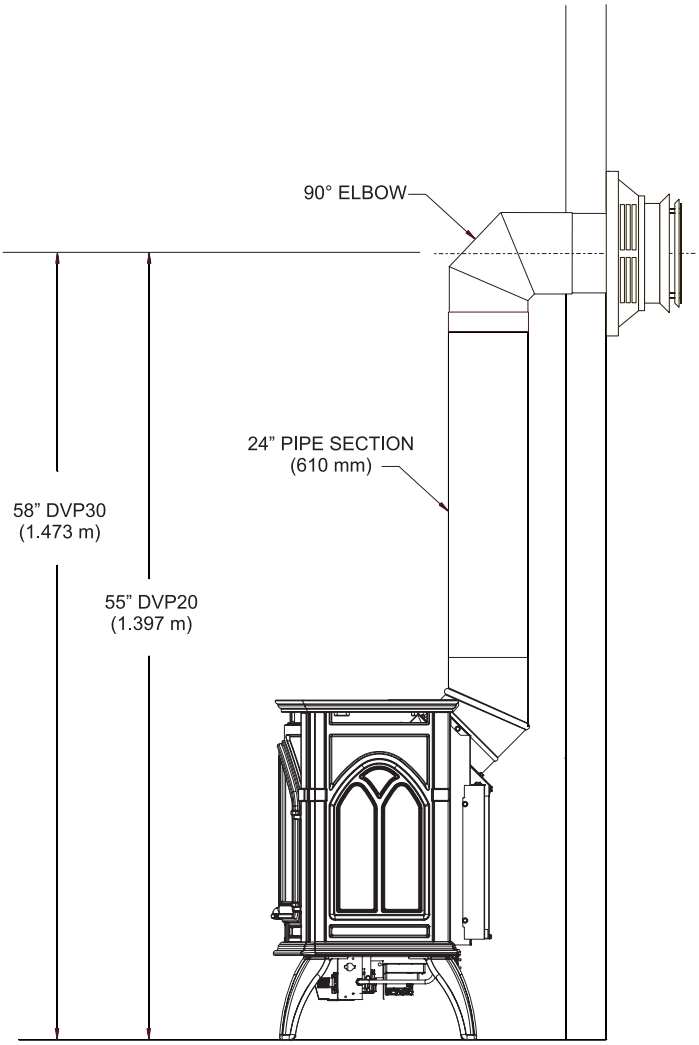

Figure 5

VENTING STOVE

SPECIAL VENTING NOTES:
DVP20CC NAT -can be vented horizontally with kit DVK45NAT maximum 18".
DVP20CC LP - can be vented horizontally with kit DVK45LP maximum 18".
DVP20CC (LP,NAT) - can use a 14" short snorkel or 36" tall snorkel.

DVP30CC NAT - **CAN NOT** be vented horizontally, straight out the back. An initial 1' vertical rise is required before turning horizontal or use of the Simpson Duravent 36" tall or 14" short snorkel is required.
DVP30CC LP - **CAN NOT** be vented horizontally, straight out the back. An initial 3' vertical rise is required before turning horizontal or use of the Simpson Duravent 36" tall snorkel is required.

⚠ CAUTION

Total vertical run MUST BE completed before starting horizontal run. **Horizontal chimney run must slope upward (away from stove) 1/4" per foot and vent termination must be level.**

Sidewall Venting
The maximum vertical and horizontal distances are 25 feet and 12 feet, respectively. Vertical dimensions are based on top of stove to centerline of pipe. Horizontal dimensions are based on centerline of pipe to termination.

Under no circumstances should combustible materials (including siding) be closer than 3" from the top of the 6 5/8" pipe or closer than 1" on the sides and bottom.

Cutting the Hole
After the appliance has been positioned in its permanent location, the hole through the exterior wall of the house can be cut. This hole needs to be 9" high x 10" wide for 4 x 6 pipe and 10-1/2 x 10-1/2 for 5 x 8 pipe with its center line determined by the amount of vertical arise and horizontal run of the termination. When locating the hole it must be noted that the bottom of the cap must be 12" above the ground level, and top of the cap must be no less than 18" below a combustible projection, and no closer than 9" to any wall running parallel to vent termination.

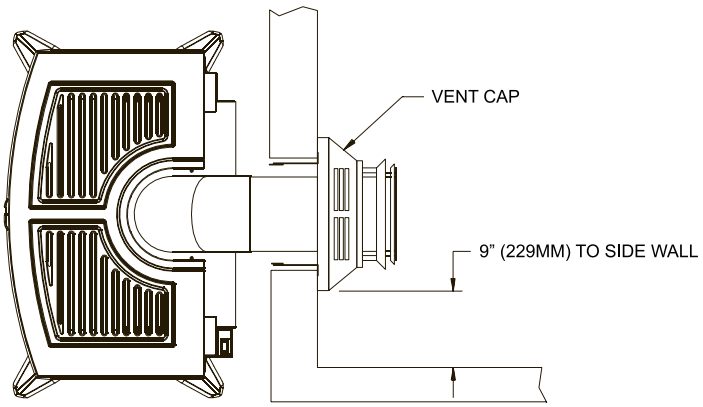

Figure 6

Co-Linear to Co-Axial Connection
A Co-Axial to Co-Linear appliance connector is approved for installation in vertical venting applications. One can be purchased through Empire Comfort Systems or Simpson Dealer (part number 46DVA-GCL).

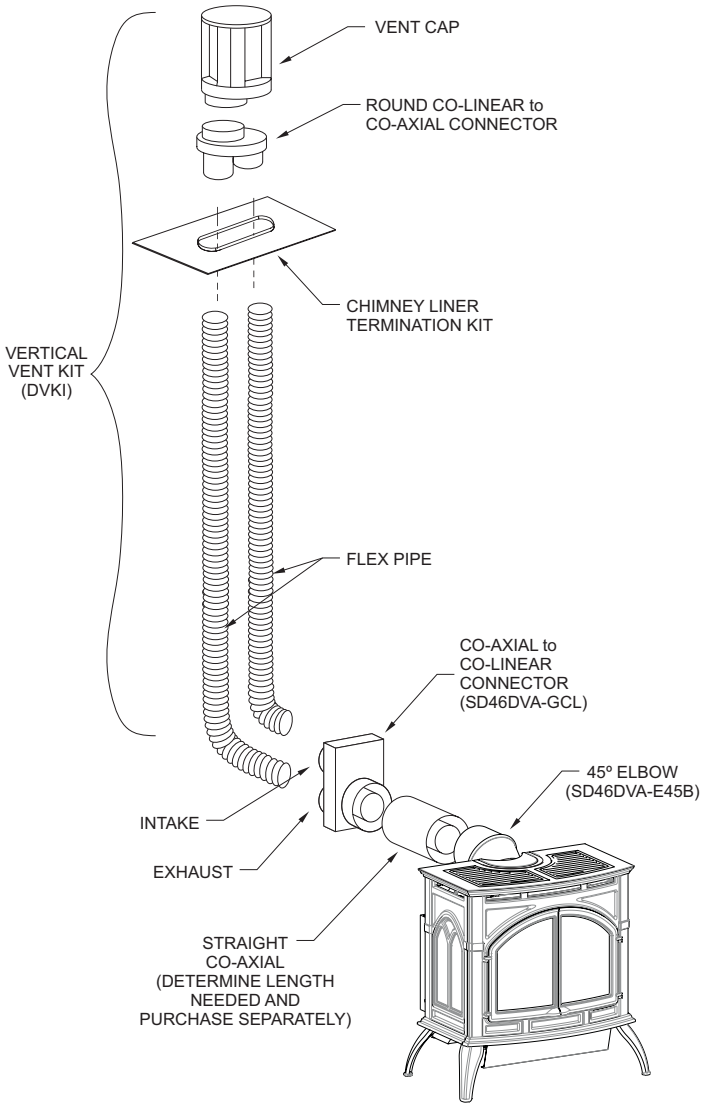

Figure 7

Venting Graph (Dimensions in Feet)

1. Determine the height of the center of the termination. Using this dimension on the Venting Graph, locate the point it intersects with the slanted graph line, or the right edge of the graph.
2. From the point of this intersection, draw a vertical line to the bottom of the graph.
3. Adjust the indicated maximum dimension for additional elbows if necessary.
4. Position the unit so that maximum horizontal run is not exceeded.

Venting Requirements

Minimum vertical rise from appliance outlet before any elbows = 12 inches (305mm) for DVP20CC(LP,NAT) and DVP30CCNAT and 24 inches (610 mm) for DVP30CCLP.

Maximum vertical rise from appliance outlet = 40 feet (12.19 m).

Maximum vertical rise and horizontal run is a combined total of 25 feet (7.62 m).

Maximum elbows = two 90°, for the second elbow subtract 5 feet from a horizontal run.

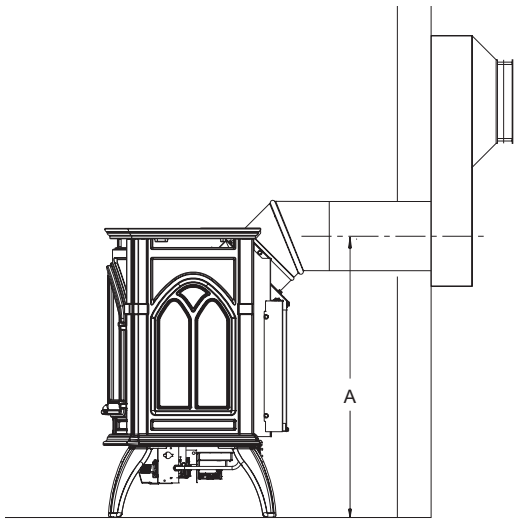

"A" Dimension	
DVP20CC	24" (610mm)
DVP30CC	27" (686mm)

Figure 8 - Snorkel Installation

To Use the Vent Graph

EXAMPLE A:

If the vertical rise from the appliance outlet is 21 feet, the horizontal run to the outer wall flange of the vent termination must not exceed 4 feet with one 90° elbow.

EXAMPLE B:

If the vertical rise from the appliance outlet is 14 feet, the horizontal run to the outer wall flange of the vent termination must not exceed 11 feet with one 90° elbow.

SPECIAL NOTE: For each 45 degree elbow installed in the horizontal run, the length of the horizontal run MUST be reduced by 18 inches (457.2 mm). This does not apply if the 45 degree elbows are installed on the vertical rise of the vent system.

Example: According to the chart the maximum horizontal run is 12 feet and if two 45 degree elbows are required in the horizontal run it must be reduced to 9 feet.

The maximum number of 45 degree elbows permitted per side wall installation is two. These elbows can be installed in either the vertical rise or horizontal run.

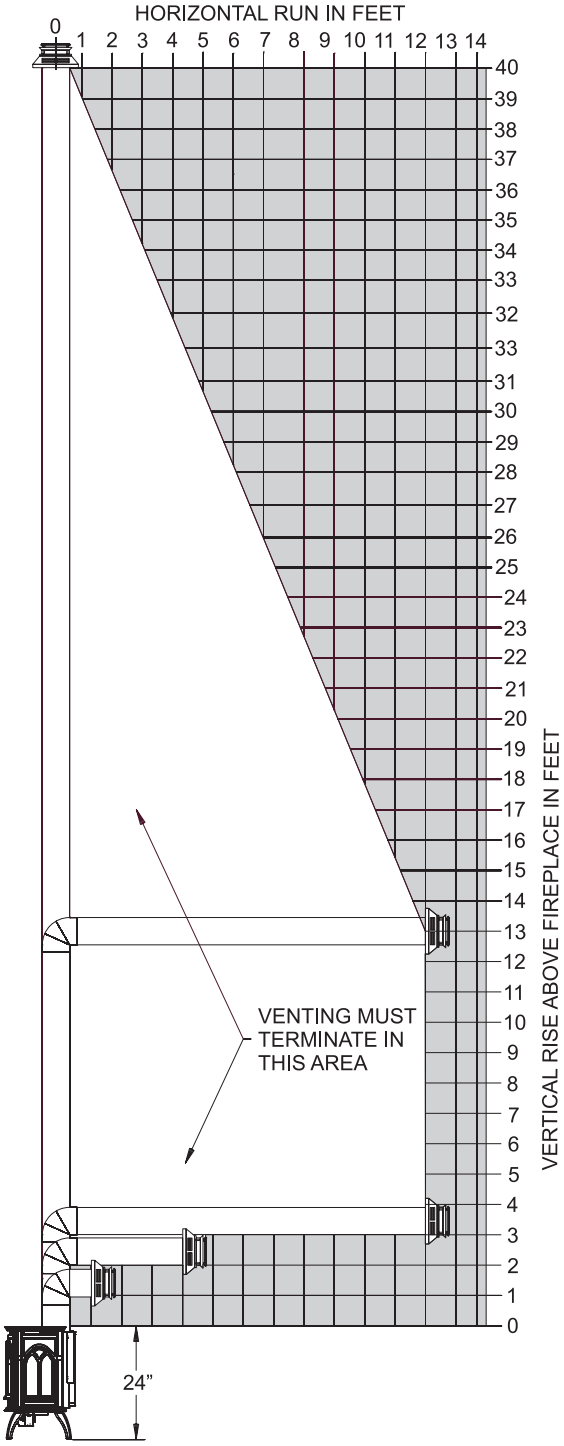

Figure 9a - DVP20CC

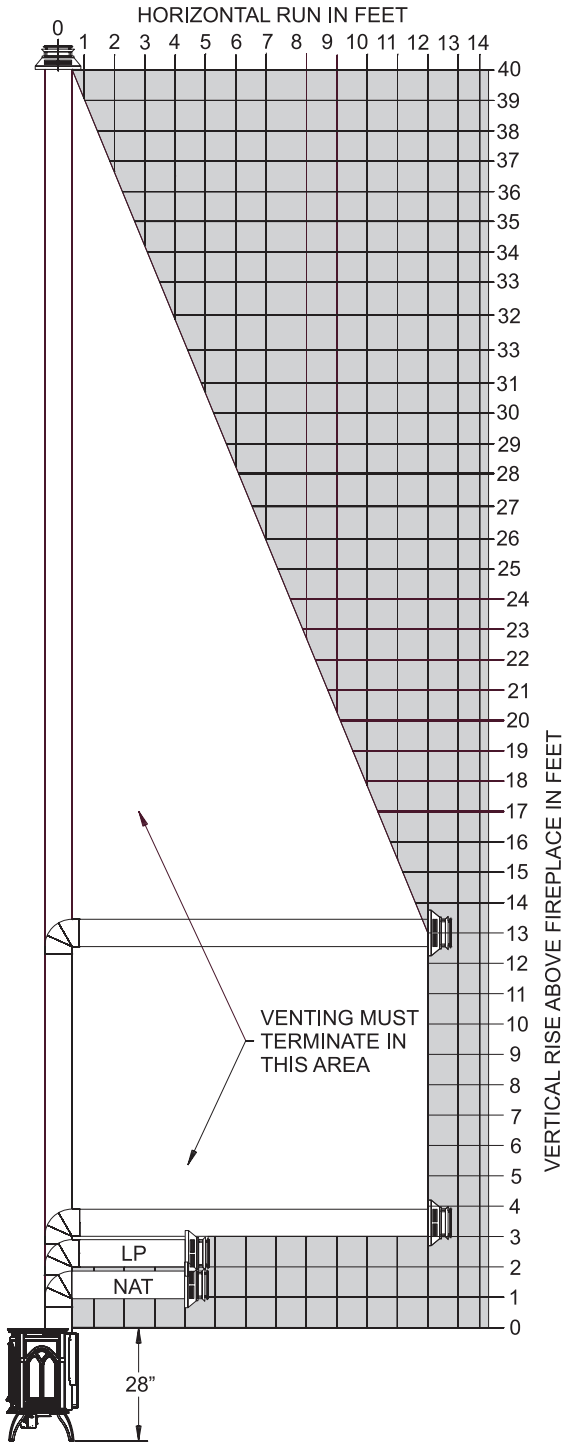

Figure 9b - DVP30CC

TERMINATION CLEARANCES

Termination clearance for buildings with combustible and noncombustible exteriors.

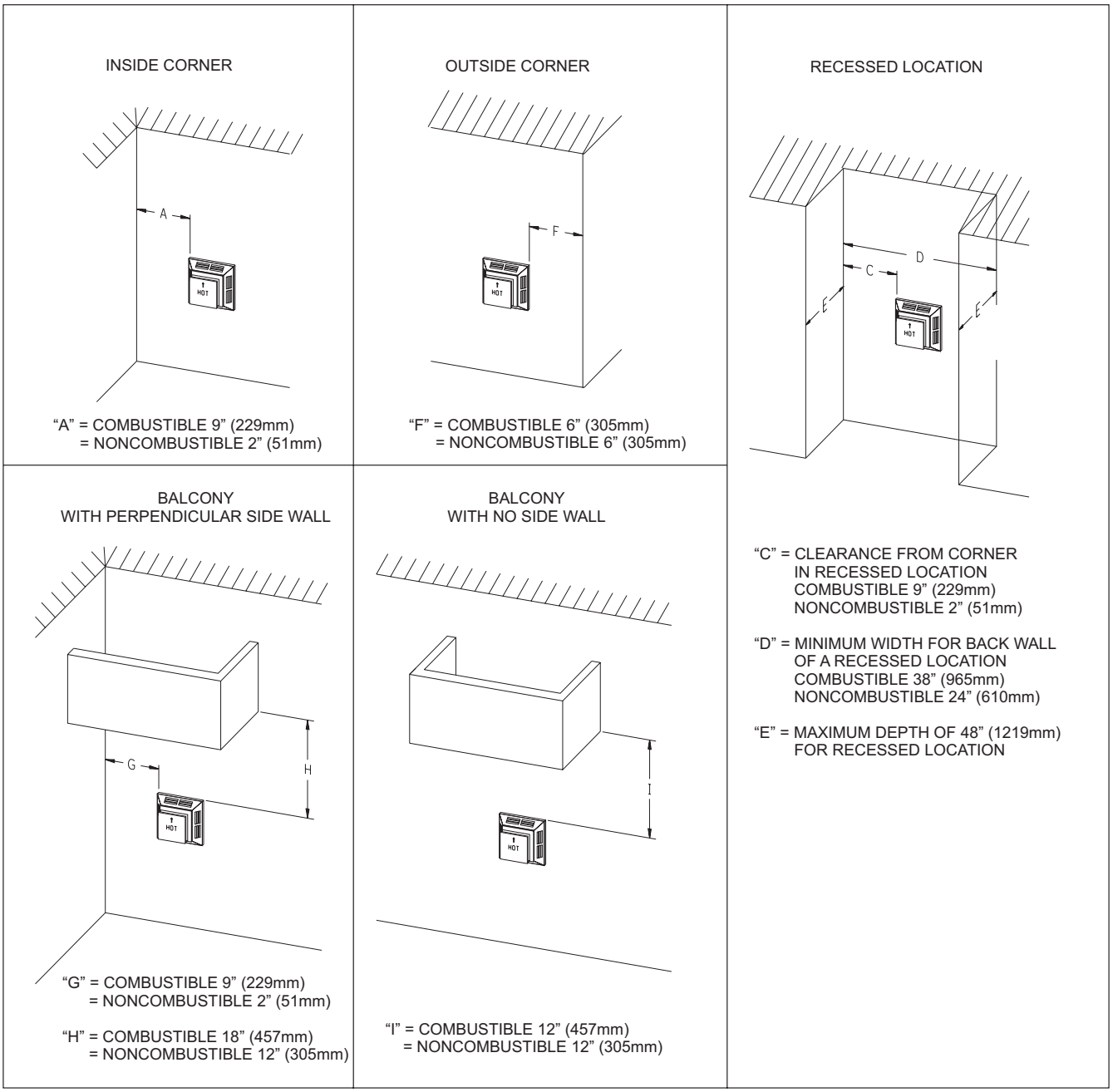

Figure 10

Vertical Sidewall Installations

Important! Minimum clearance between vent pipes and combustible materials is one inch (25 mm) on, bottom and sides and three inches (51 mm) on top.

Important! When vent termination exits through foundation less than 20" below siding outcrop, the vent pipe must flush up with the siding. 46-DVA-HC termination cap must also be used.

Information on Various Venting Routes and Components

Important: It is always best to locate the appliance in such a way that minimizes the number of offsets and horizontal vent length.

Since it is very important that the venting system maintain its balance between the combustion air intake and the flue gas exhaust, certain limitations as to vent configurations apply and must be strictly adhered to.

The graph showing the relationship between vertical and horizontal side wall venting will help to determine the various vent lengths allowable.

The horizontal vent run refers to the total length of vent pipe from the vent elbow of the appliance to the face of the outer wall.

VENT CLEARANCES

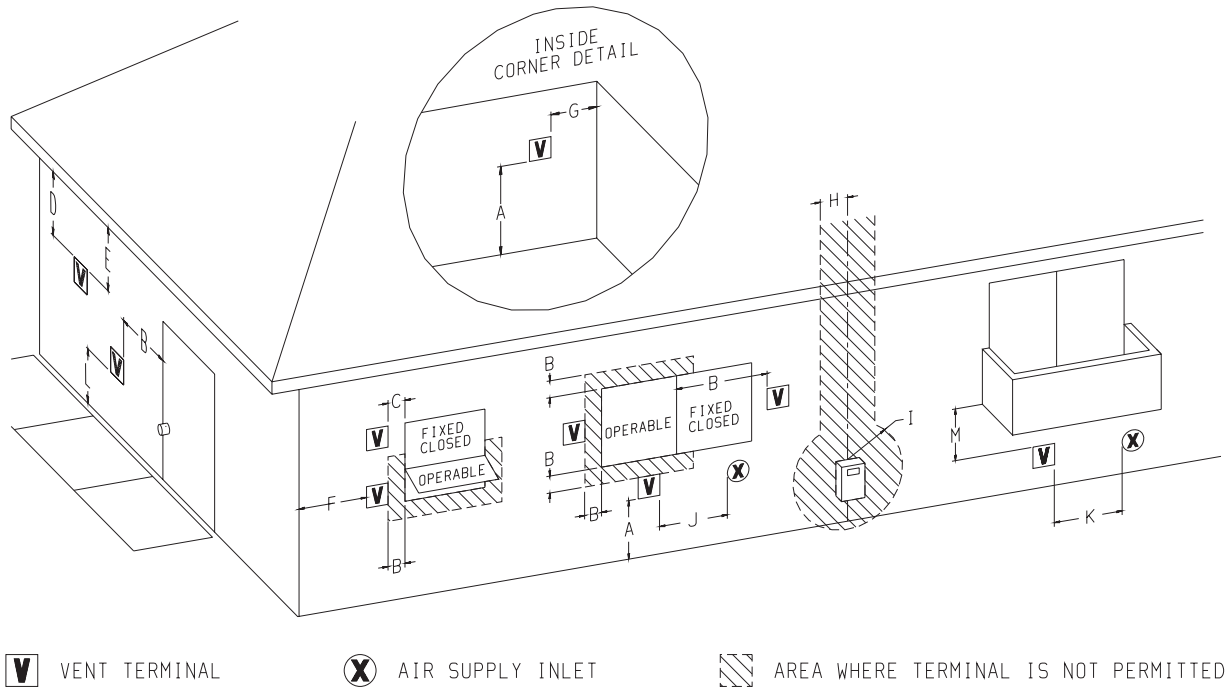

Figure 11

	Canadian Installations1	US Installations2
A= Clearance above grade, veranda, porch, deck, or balcony	12 in (30 cm)	12 in (30cm)
B= Clearance to window or door that may be open	6 in (15 cm) for appliances ≤ 10,000 Btuh (3 kW), 12 in (30 cm) for appliances > 10,000 Btuh (3 kW) and ≤ 100,000 Btuh (30 kW), 36 in (91 cm) for appliances > 100,000 Btuh (30 kW)	6 in (15 cm) for appliances ≤ 10,000 Btuh (3 kW), 9 in (23 cm) for appliances > 10,000 Btuh (3 kW) and ≤ 50,000 Btuh (15 kW), 12 in (30 cm) for appliances > 50,000 Btuh (15 kW)
C= Clearance to permanently closed window	12 in (30 cm)	12 in (30 cm)
D= Vertical clearance ventilated soffit located above the terminal within a horizontal distance of 2 feet (61 cm) from the center line of the terminal	24 in (61 cm)	24 in (61 cm)
E= Clearance to unventilated soffit	12 in (30 cm)	12 in (30 cm)
F= Clearance to outside corner	6 in (15 cm)	6 in (15 cm)
G= Clearance inside corner	9 in (23 cm)	9 in (23 cm)
H= Clearance to each side of center line extended above meter/regulator assembly	3 ft (91 cm) within a height 15 ft (4.5 m) above the meter/regulator assembly	3 ft (91 cm)

ATTENTION: Vinyl Soffit, Vinyl Ceiling, Vinyl Overhang Disclaimer

Clearances are to heat resistant material (i.e. wood, metal). This does not include vinyl. Empire Comfort Systems Inc. will not be held responsible for heat damage caused from terminating under vinyl overhangs, vinyl ceilings or vinyl ventilated/unventilated soffits.

	Canadian Installations1	US Installations2
I= Clearance to service regulator vent outlet	3 ft (91 cm)	6 ft
J= Clearance to nonmechanical air supply inlet to building or the combustion air inlet to any other appliance	6 in (15 cm) for appliances ≤ 10,000 Btuh (3 kW), 12 in (30 cm) for appliances > 10,000 Btuh (3 kW) and ≤ 100,000 Btuh (30 kW), 36 in (91 cm) for appliances > 100,000 Btuh (30 kW)	6 in (15 cm) for appliances ≤ 10,000 Btuh (3 kW), 9 in (23 cm) for appliances > 10,000 Btuh (3 kW) and ≤ 50,000 Btuh (15 kW), 12 in (30 cm) for appliances > 50,000 Btuh (15 kW)
K= Clearance to a mechanical air supply inlet	6 ft (1.83 m)	3 ft (91 cm) above if within 10 ft (3 m) horizontally
L= Clearance above paved sidewalk or paved driveway located on public property	7 ft (2.13 m) †	7 ft (2.13 m) †
M= Clearance under veranda, porch deck, or balcony	12 in (30 cm) ‡	12 in (30 cm) ‡

1 In accordance with the current CSA B149.1, Natural Gas and Propane Installation Code

2 In Accordance with the current ANSI Z223.1/NFPA 54, National Fuel Gas Code

† A vent shall not terminate directly above a sidewalk or paved driveway that is located between two single family dwellings and serves both dwellings

‡ Permitted only if veranda,, porch, deck, or balcony is fully open on a minimum of two sides beneath the floor.

* For clearances not specified in ANSI Z223.1/NFPA 54 or CSA B149.1, one of the following shall be indicated:

Clearance in accordance with local installation codes and the requirements of the gas supplier.

VENT SYSTEM IDENTIFICATION

Installing Vent Components

Begin the vent system installation by installing the first Simpson Duravent component on the top of the appliance with a 45° elbow and rotate the vent elbow to the desired position then add horizontal and vertical pipe lengths and then a horizontal or vertical termination kit. Elbows can be added where necessary. See Pages 11 through 15 for venting requirements.

Simpson Duravent vent system components lock into place by sliding the concentric pipe section with four equally spaced interior beads onto the appliance collar or previously installed component end with four equally spaced indented sections. When the internal beads of each starting 6 5/8 inch outer pipe line up, rotate pipe section clockwise 90° (approximately 3 inches). The vent pipe is now locked together.

Continue adding components per the pre-planned vent system configuration. Be certain that each succeeding vent component is securely fitted and locked into the preceding component in the vent system.

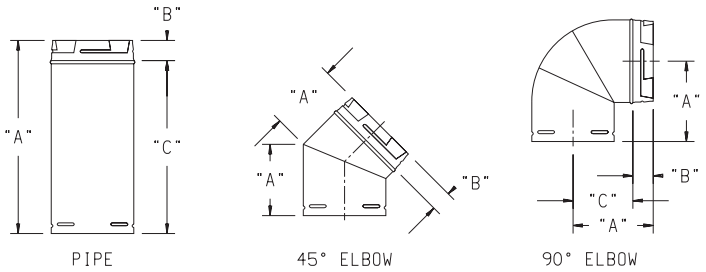

PART NAME	"A"	"B"	"C"
6" PIPE	6" (152 mm)	1 1/2" (38 mm)	4 1/2" (114 mm)
9" PIPE	9" (229 mm)	1 1/2" (38 mm)	7 1/2" (191 mm)
12" PIPE	12" (305 mm)	1 1/2" (38 mm)	10 1/2" (267 mm)
24" PIPE	24" (610 mm)	1 1/2" (38 mm)	22 1/2" (572 mm)
36" PIPE	36" (914 mm)	1 1/2" (38 mm)	34 1/2" (876 mm)
48" PIPE	48" (1.220 m)	1 1/2" (38 mm)	46 1/2" (1.18 m)
45° ELBOW	5 1/2" (140 mm)	1 1/2" (38 mm)	---
90° ELBOW	6 1/2" (165 mm)	1 1/2" (38 mm)	5" (127 mm)

Figure 12

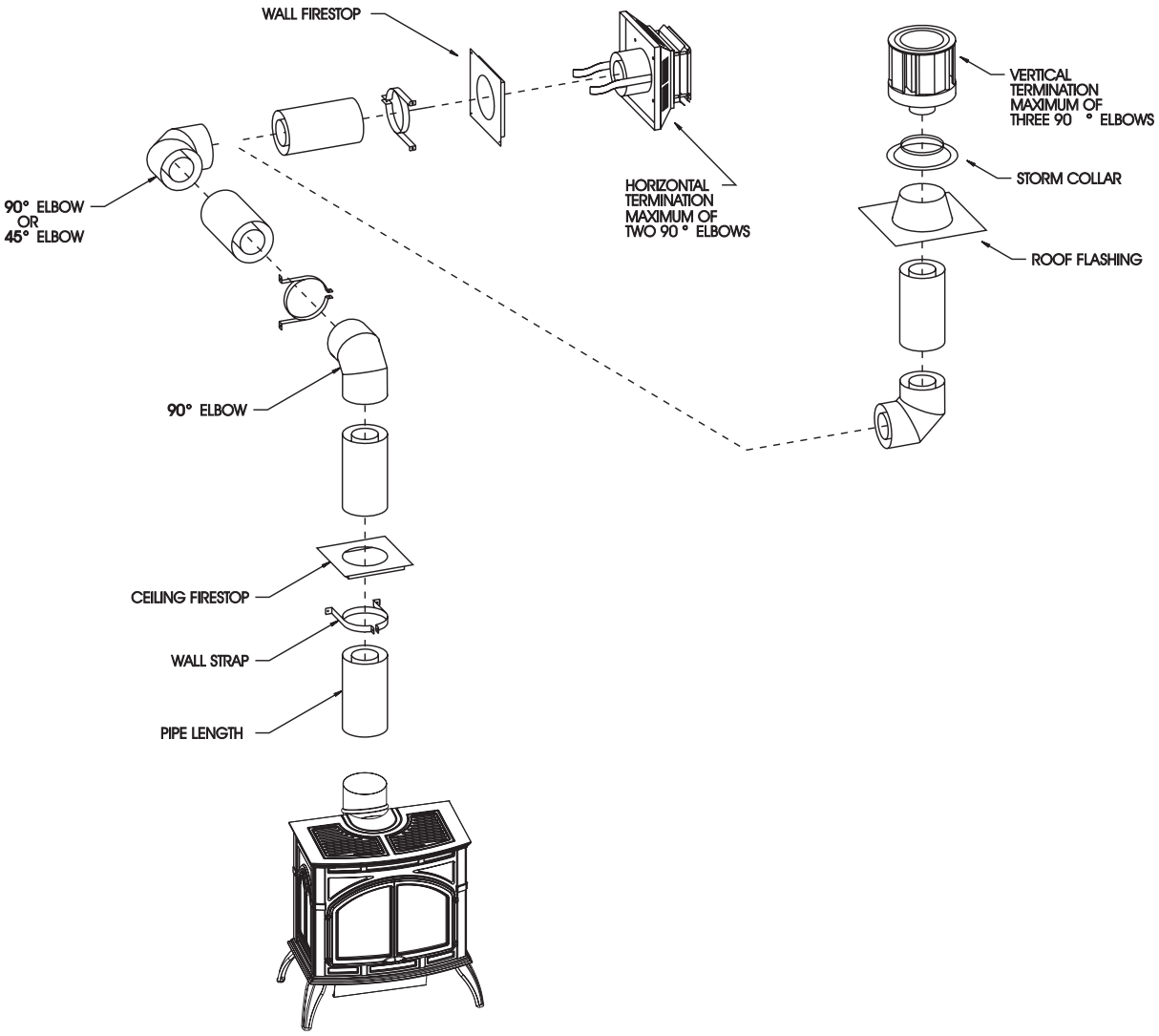

Figure 13

Installing Support Brackets

A horizontal pipe support MUST BE used for each 3 feet of horizontal run. The pipe supports should be placed around 6 5/8 inch diameter pipe and nailed in place to framing members. There MUST BE a 2 inch clearance to combustibles above 6-5/8 inch diameter pipe and elbows and 1 inch clearance on both sides and bottom of 6-5/8 inch to combustibles on all horizontal pipe sections and elbows.

Vertical runs of this vent systems must be supported every 4 feet above the appliance flue outlet by wall brackets attached to the 6 5/8 inch vent pipe and secured with nails or screws to structural framing members.

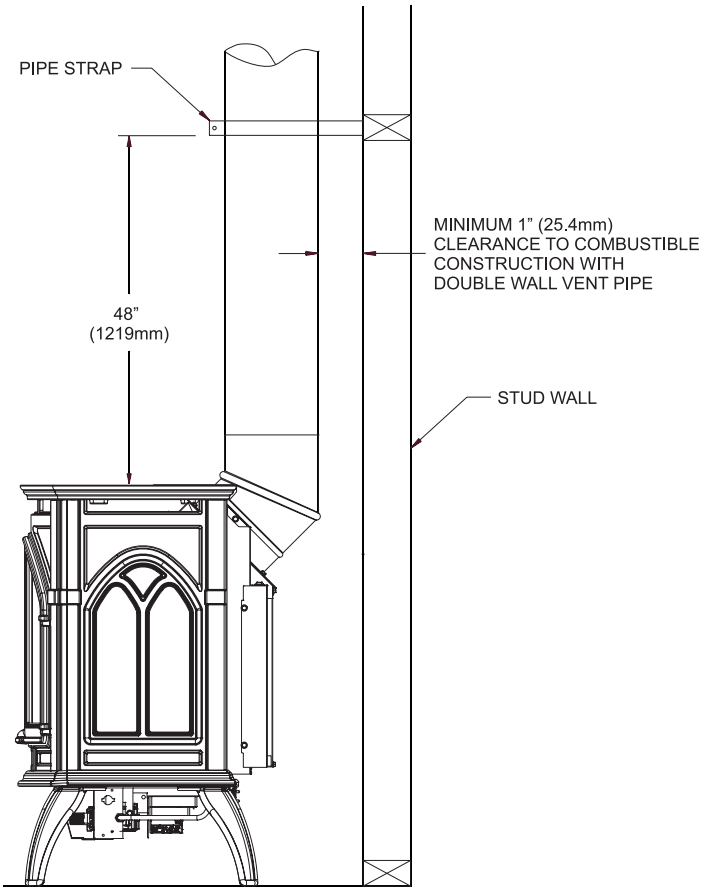

Figure 14

Installing Firestops

Firestops are required for safety whenever the vent system passes through an interior wall, an exterior wall, or a ceiling. These firestops act as a firebreak heat shield and as a means to insure that minimum clearances are maintained to the vent system.

Horizontal runs in the vent system which pass through either interior or exterior walls, require the use of wall firestops on both sides of the wall through which the vent passes.

Position the firestops on both sides of the 9 inch x 10 inch hole for 4 x 6 pipe and 10-1/2 x 10-1/2 hole for 5 x 8 pipe, previously cut. Secure with nails or screws. Continue the vent run through the firestops. See Figure 14.

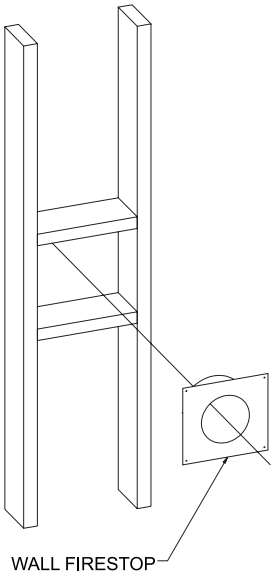

Figure 15

Vertical runs of this system which pass through ceilings require the use of one ceiling firestop at the hole in each ceiling through which the vent passes.

Position a plumb bob directly over the center of the vertical vent component and mark the ceiling to establish the center point of the vent. Drill a hole or drive a nail through this center point and check the floor above for any obstructions such as wiring or plumbing runs. Reposition the appliance and vent system, if necessary, to accommodate ceiling joists and/or obstructions.

Cut a 9 inch x 9 inch hole through the ceiling, using the center point previously marked. Frame the hole with framing lumber the same size as the ceiling joists. See Figure 16. If the area above the ceiling is NOT an attic, position and secure the ceiling firestop (46DVA-FS) on the ceiling side of the previously cut and framed hole. See Figure 17. If the area above the ceiling IS an attic, position and secure the firestop on top of the previously framed hole. See Figure 18.

Note: Remove insulation from the framed area in the attic before installing the firestop and/or vent stop and/or vent pipes.

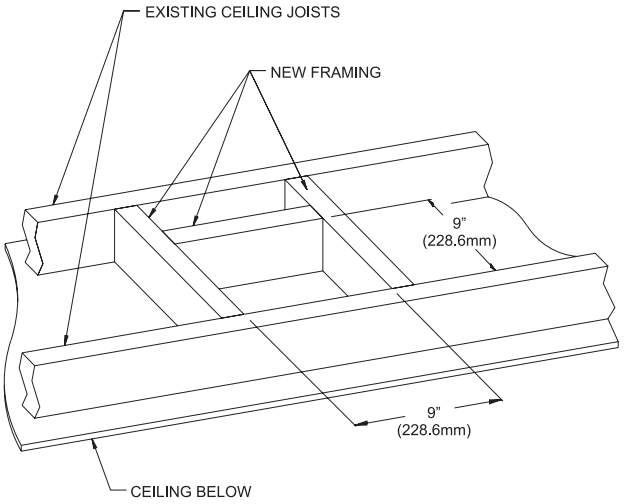

Figure 16

FRAMING AND FINISHING (continued)

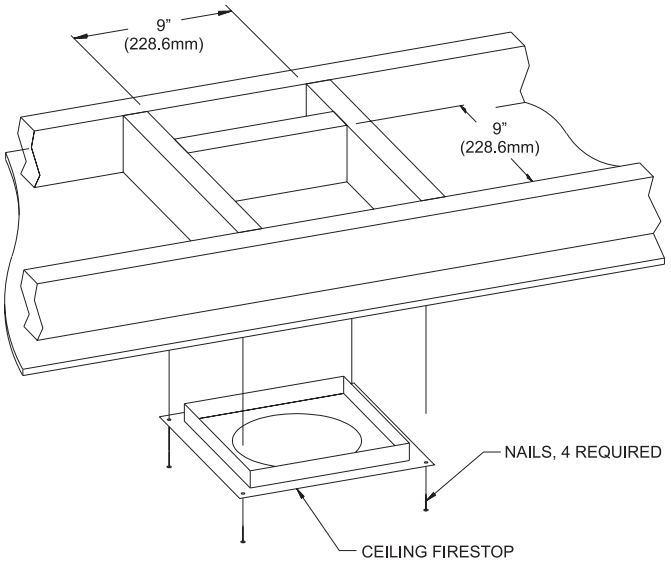

Figure 17

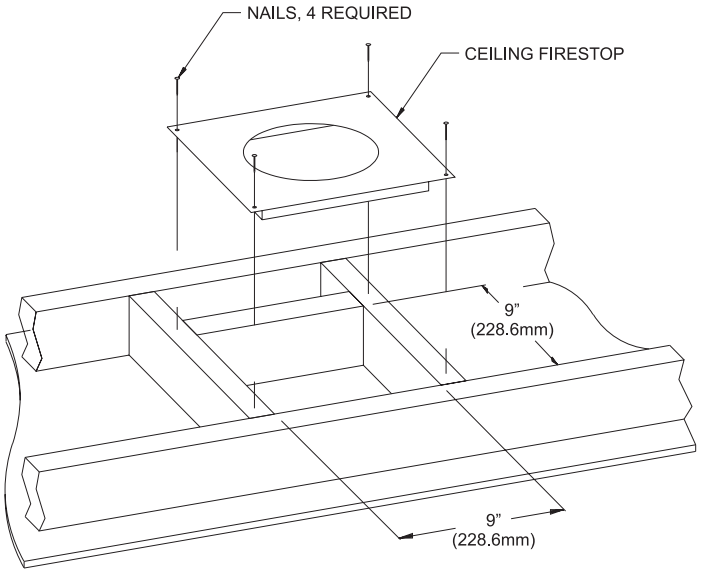

Figure 18

HORIZONTAL TERMINATION

Attach and secure the termination to the last section of horizontal venting by sliding cap over the last section of horizontal venting to ensure proper location.

NOTE: Termination cap should pass through the wall firestop from the exterior of the building. Adjust the termination cap to its final exterior position on the building.

⚠ WARNING
Termination cap must be positioned so that the arrow is pointing up.

Using the termination cap in the center of the square hole, attach the termination cap with the four wood screws provided. Before attachment of the termination, run a bead of silicone sealant rated above 250°F on its outside edge too, so as to make a seal to that exterior wall.

NOTE: Wood screws can and should be replaced with appropriate fasteners for use on stucco, brick, concrete or other types of siding.

⚠ CAUTION
If exterior walls are finished with siding (vinyl, aluminum, etc.), it is necessary to install the vinyl siding shield (46DVA-VSS).

Vinyl siding shield (46DVA-VSS) will be installed between the vent termination and the exterior wall. See Figure 19. This horizontal vent termination bolts onto the flat portion of the vinyl siding standoff, so an air space will exist between the wall and the termination cap.

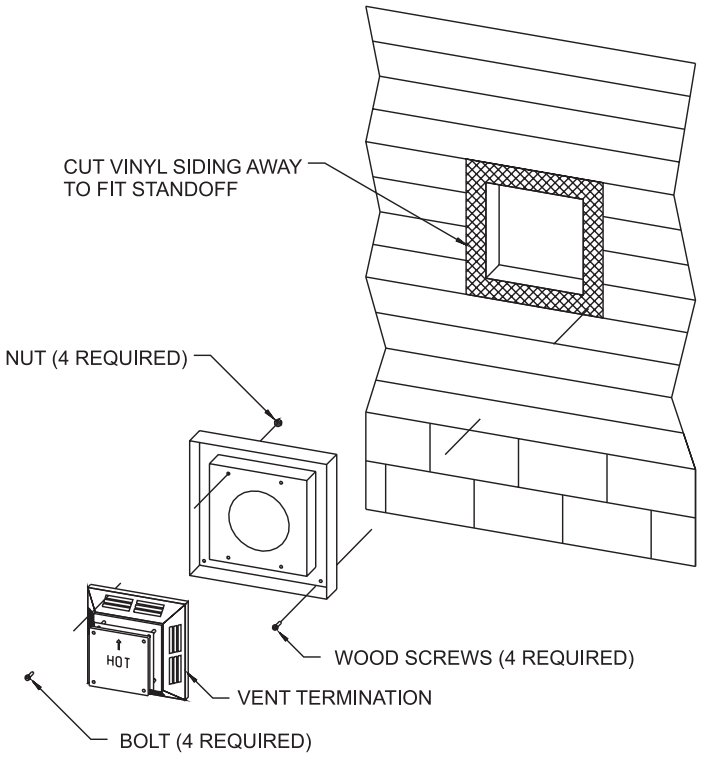

Figure 19

VERTICAL TERMINATION

Vertical Terminations

Locate and mark the center point of the venting pipe. Using a nail on the underside of the roof and drive this nail through this center point. Make the outline of the roof hole around this center point.

NOTE: Size of the roof hole dimensions depend on the pitch of the roof. There must be a 1 inch clearance (25 mm) to the vertical pipe sections. This clearance is to all combustible material.

Cover the opening of the vent pipe and cut and frame the roof hole. Use framing lumber the same size as the roof rafters and install the frame securely. Flashing anchored to frame must withstand high winds. The storm collar is placed over this joint to make a watertight seal. Non-hardening sealant should be used to completely seal this flashing installation.

Determining Minimum Vent Height Above the Roof.

⚠ WARNING

Major U.S. building codes specify minimum chimney and/or vent height above the roof top. These minimum heights are necessary in the interest of safety. These specifications are summarized in Figure 20.

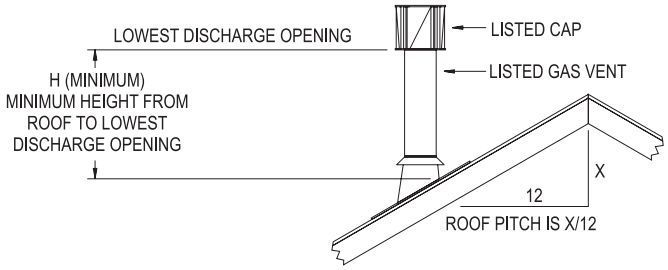

ROOF PITCH	H (MINIMUM	
	FEET	METER
FLAT TO 6/12	1.0	0.30
6/12 TO 7/12	1.25	0.36
OVER 7/12 TO 8/12	1.5	0.46
OVER 8/12 TO 9/12	2.0	0.61
OVER 9/12 TO 10/12	2.5	0.76
OVER 10/12 TO 11/12	3.25	0.99
OVER 11/12 TO 12/12	4.0	1.22
OVER 12/12 TO 14/12	5.0	1.52
OVER 14/12 TO 16/12	6.0	1.83
OVER 16/12 TO 18/12	7.0	2.13
OVER 18/12 TO 20/12	7.5	2.27
OVER 20/12 TO 21/12	8.0	2.44

Figure 20

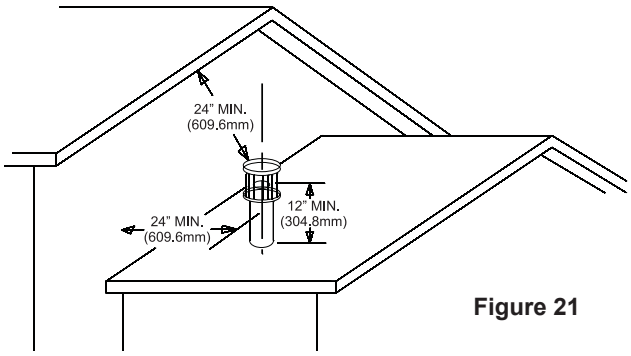

Figure 21

Note that for steep roof pitches, the vent height must be increased. In high wind conditions, nearby trees, adjoining roof lines, steep pitched roofs, and other similar factors can result in poor draft, or down-drafting. In these cases, increasing the vent height may solve this problem.

When terminating the vent cap near an exterior wall or overhang, maintain minimum clearances as shown in **Figure 20**.

General Maintenance

Conduct an inspection of the venting system semi-annually. Recommended areas to inspect are as follows:

1. Check areas of the venting system which are exposed to the elements for corrosion. These will appear as rust spots or streaks and, in extreme cases, holes. These components should immediately be replaced.
2. Remove the cap and shine a flashlight down the vent. Remove any bird nests or other foreign material.
3. Check for evidence of excessive condensate, such as water droplets forming in the inner liner and subsequently dripping out at joints. Continue condensate can cause corrosion of caps, pipe and fittings. It may be caused by having excessive lateral runs, too many elbows and exterior portions of the system being exposed to cold weather.
4. Inspect joints to verify that no pipe sections or fittings have been disturbed and, consequently, loosened. Also, check mechanical supports, such as wall straps or plumbers' tape for rigidity.

Venting terminal shall not be recessed into a wall or siding.

A removable panel or other means must be provided in the enclosure for visual inspection of the flue connection.

Installing the Vent System in a Chase

A chase is a vertical box like structure built to enclose the gas appliance and/or it's vent system. Vertical vent runs on the outside of a building may be, but are not required to be installed inside a chase.

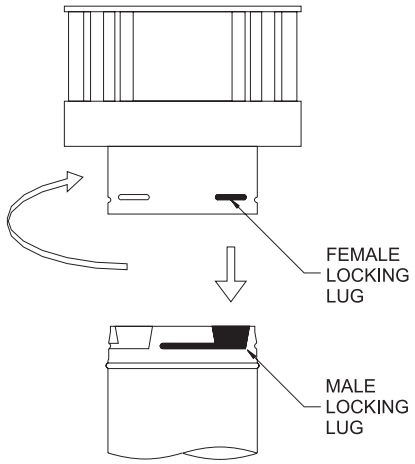

SLIDE FEMALE LOCKING LUG DOWN INTO MALE LOCKING LUG AND TWIST CLOCKWISE TO LOCK

Figure 22

⚠ CAUTION

Treatment of firestop spacers and construction of the chase may vary with the type of building. These instructions are not substitutes for the requirements of local building codes. Therefore, your local building codes must be checked to determine the requirements for these steps.

Note: When installing this vent system in a chase, it is always good building practice to insulate the chase as you would the outside walls of your home. This is especially important for cold climate installations. Upon completion of building your chase framing, install the vent system by following the instructions in this manual. Remember to build the chase large enough so that minimum clearance of combustible materials (including insulation) to the vent system are maintained.

Vertical Through the Roof Applications

Your Gas Stove has been approved for

a) Vertical installations up to 40 feet of vent run
b) Two sets of 45 degree elbow offsets within these vertical installations. From 0 to a maximum of 8 feet a vent pipe can be used between elbows.
c) Wall straps must be used to support offset pipe every 4 feet.

This applications will require that you first determine the roof pitch and use the appropriate venting components.

Reassembly and Resealing Vent-Air Intake System

Attach vent pipe to appliance air drop with four 1/2" hex-head screws in position, replace vertical and horizontal pipe lengths, elbows and horizontal or vertical termination kit.

All vent system components lock into place by sliding the concentric pipe section with four equally spaced interior beads onto the appliance collar or previously installed component end with four equally spaced indented sections. When the internal beads of each starting 6 5/8 inch outer pipe line up, rotate pipe section clockwise 90° (approximately 3 inches). The vent pipe is now locked together.

Continue replacing components per the vent system configuration. Be certain that each succeeding vent component is securely fitted and locked into the preceding component in the vent system.

Installing Support Brackets

A horizontal pipe support MUST BE used for each 3 feet of horizontal run. The pipe supports should be placed around 6 5/8 inch diameter pipe and nailed in place to framing members. There MUST BE a 2 inch clearance to combustibles above 6 5/8 inch diameter pipe and elbows and 1 inch clearance on both sides and bottom of 6 5/8 inch to combustibles on all horizontal pipe sections and elbows.

Vertical runs of this vent systems must be supported every 4 feet above the appliance flue outlet by wall brackets attached to the 6 5/8 inch vent pipe and secured with nails or screws to structural framing members.

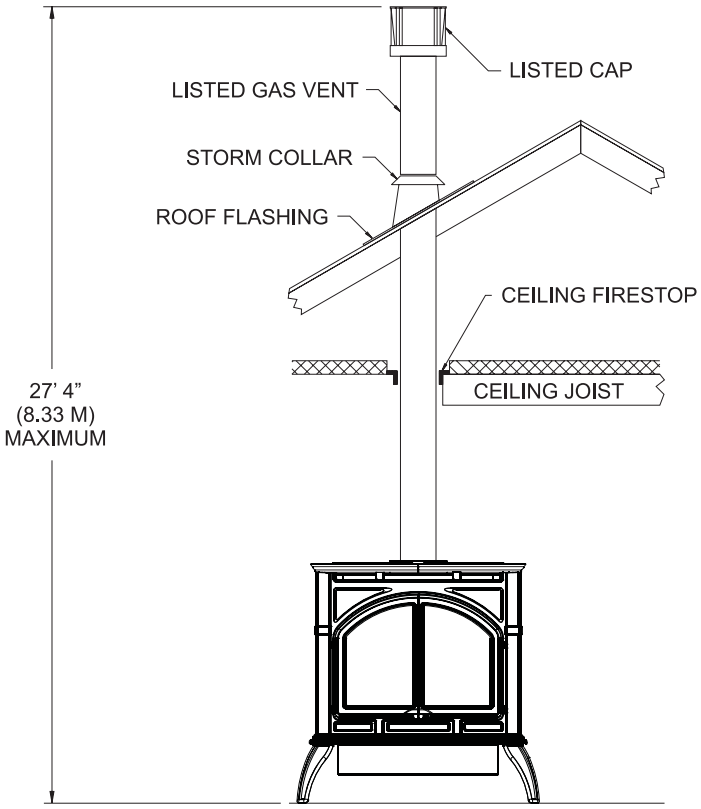

Figure 23

DVP20CC LOG IDENTIFICATION

Log Description	Part Number	Front View	Top View
Log A	29790		
Log B	29792		
Log C	29791		
Log D	29793		

DVP20CC LOG PLACEMENT

1. Place Log A onto the pins on the Log Support Shelf.
2. Place Log B onto the two right pins on the burner.
3. Place Log C onto the two left pins on the burner.
4. Place Log D on the pin on Log A with the "fork" resting on Logs B and C..
5. Place ember material on front burner ports as shown in Figure 25.

NOTE: For step by step instructions with images, see pages 23-27

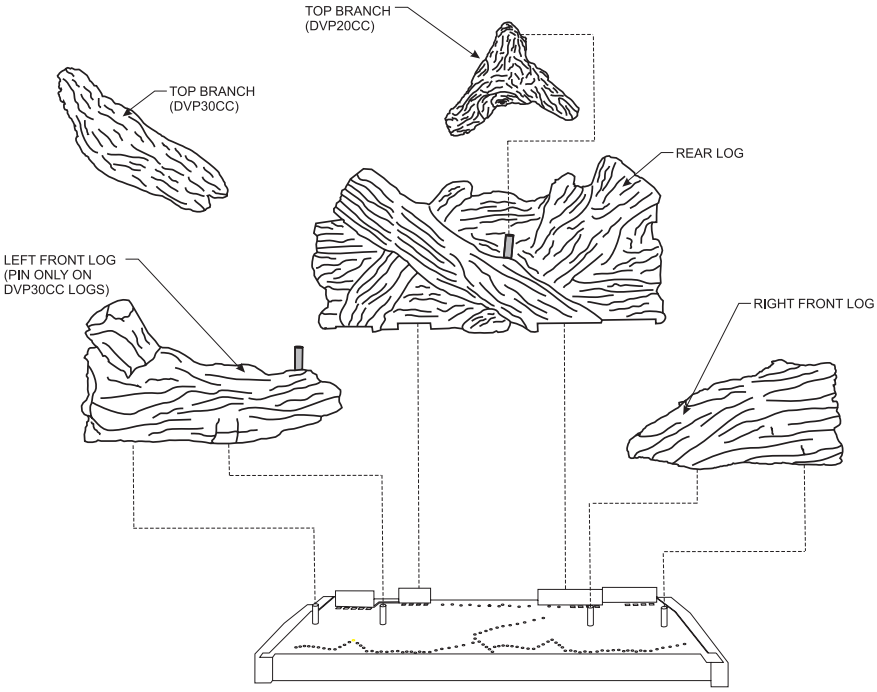

Figure 24

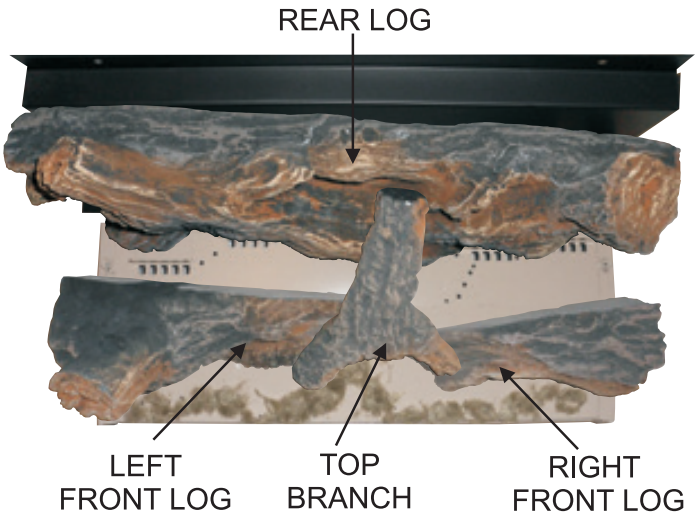

Figure 25 - Log Placement - Top View (DVP20CC Shown)

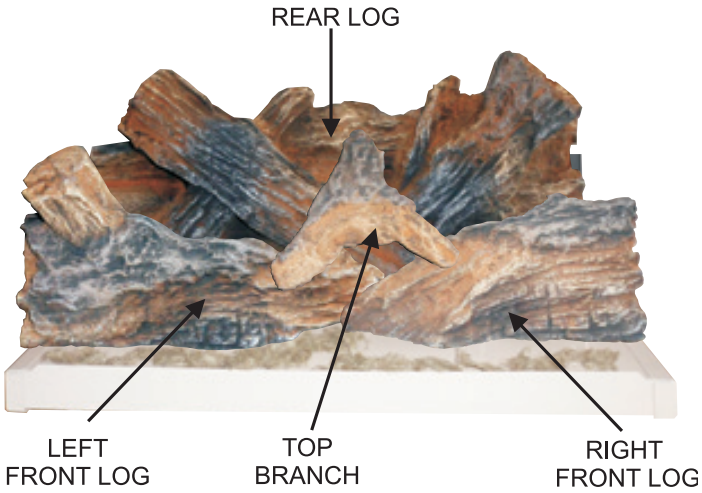

Figure 26 - Log Placement - Front View (DVP20CC Shown)

DVP20CC LOG PLACEMENT

1. Place Log A onto the pins on the Log Support Shelf as shown below.

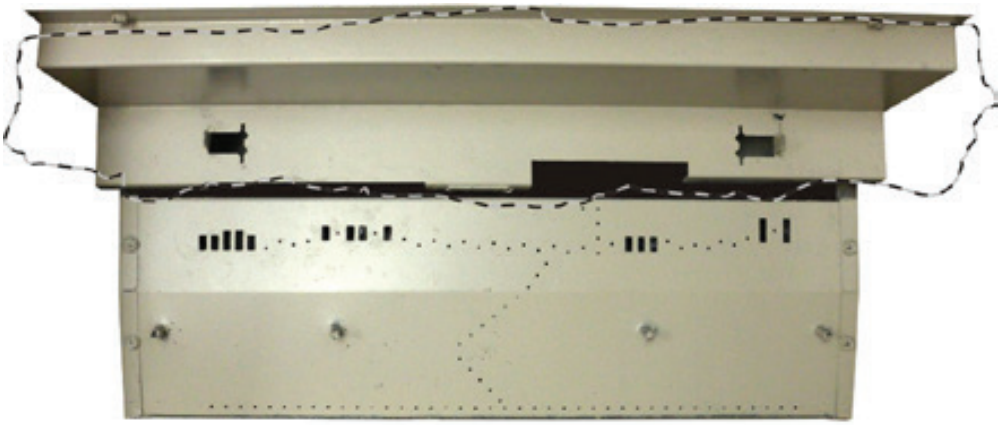

Top View

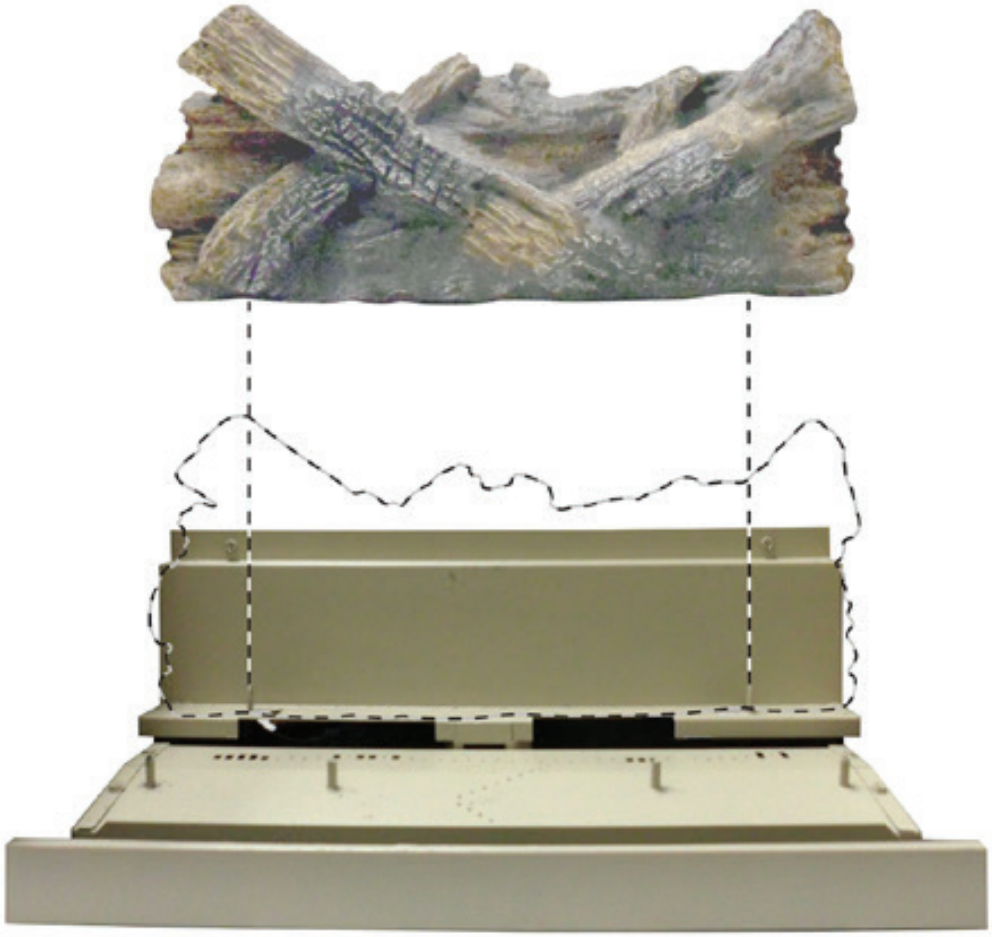

Front View

2. Place Log B onto the two right pins on the burner as shown below.

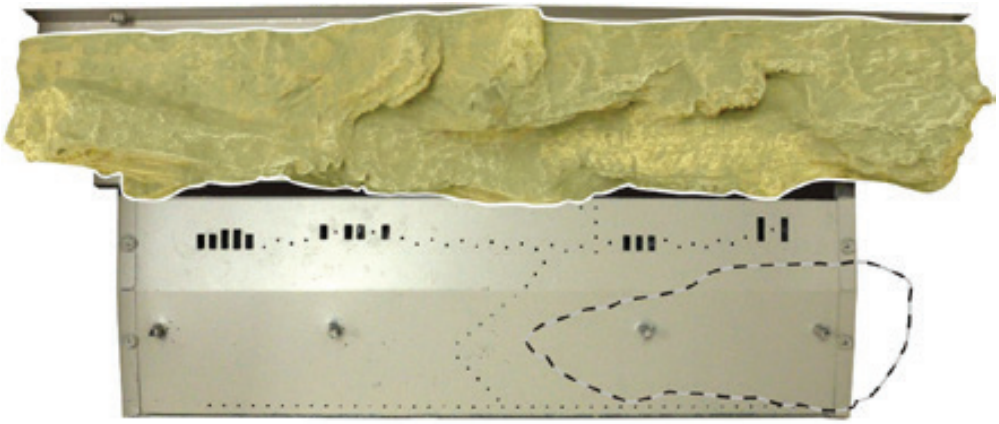

Top View

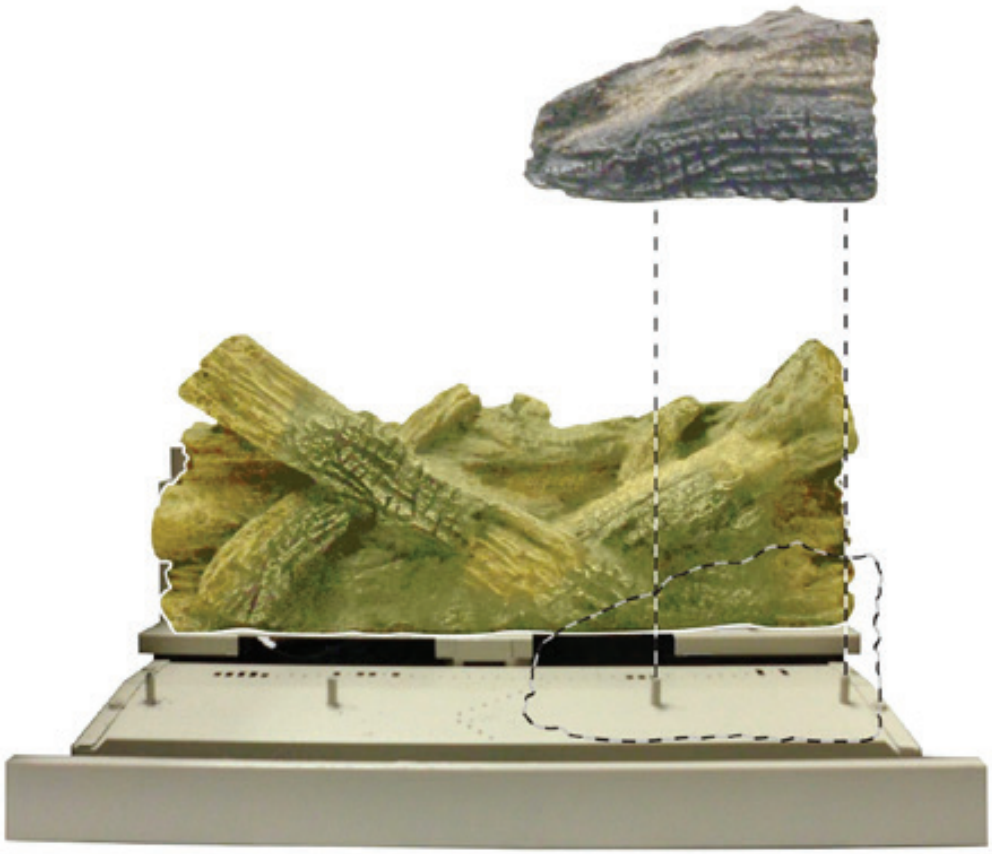

Front View

DVP20CC LOG PLACEMENT

3. Place Log C onto the two left pins on the burner as shown below.

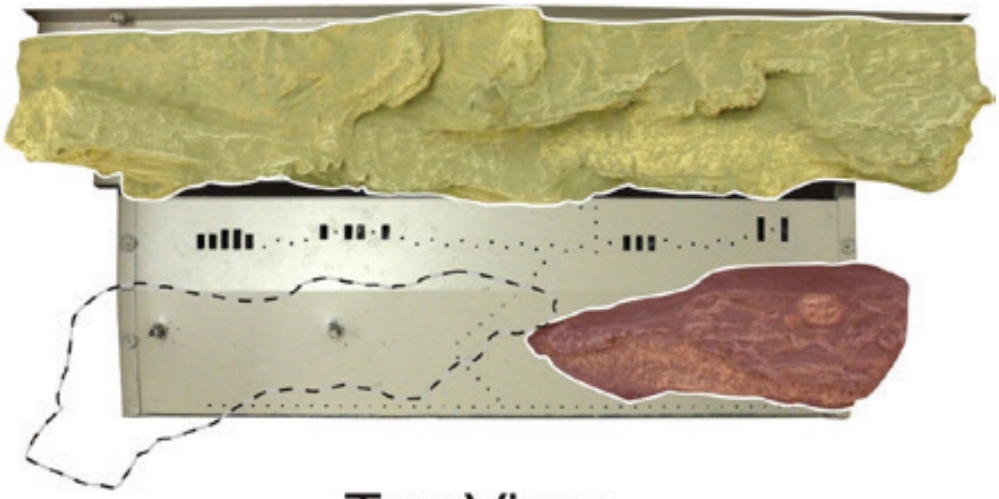

Top View

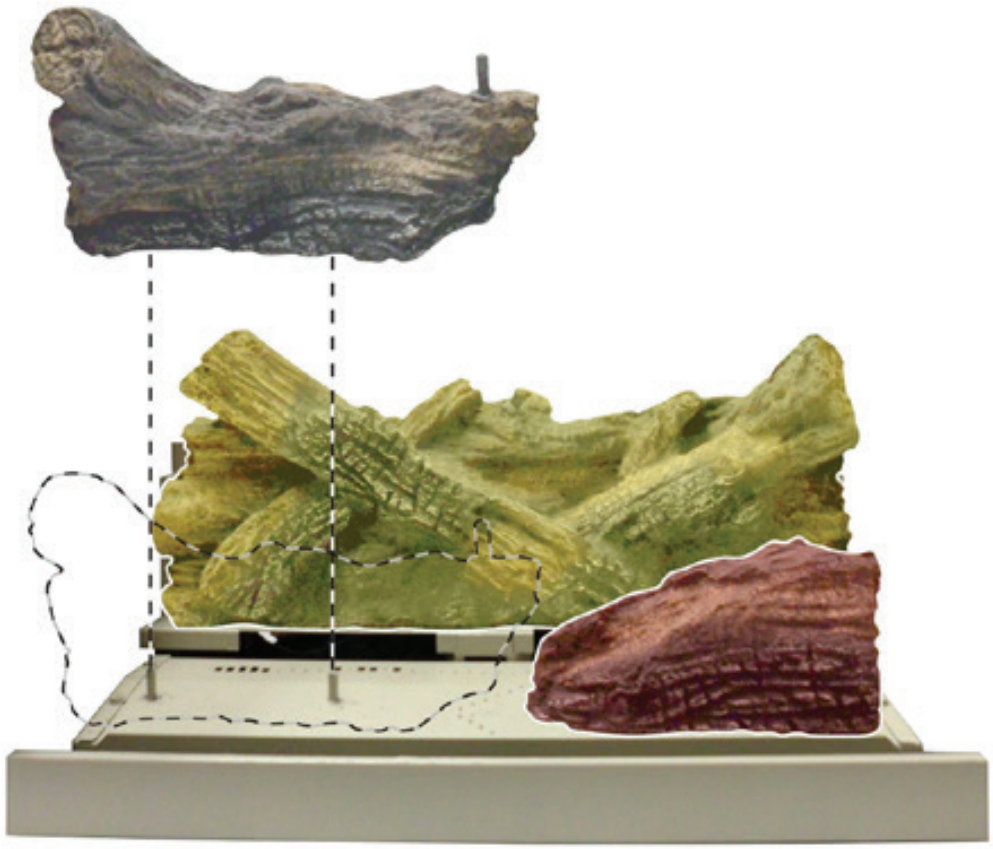

Front View

DVP20CC LOG PLACEMENT

4. Place Log D on the pin on Log A with the "fork" resting on Logs B and C as shown below.

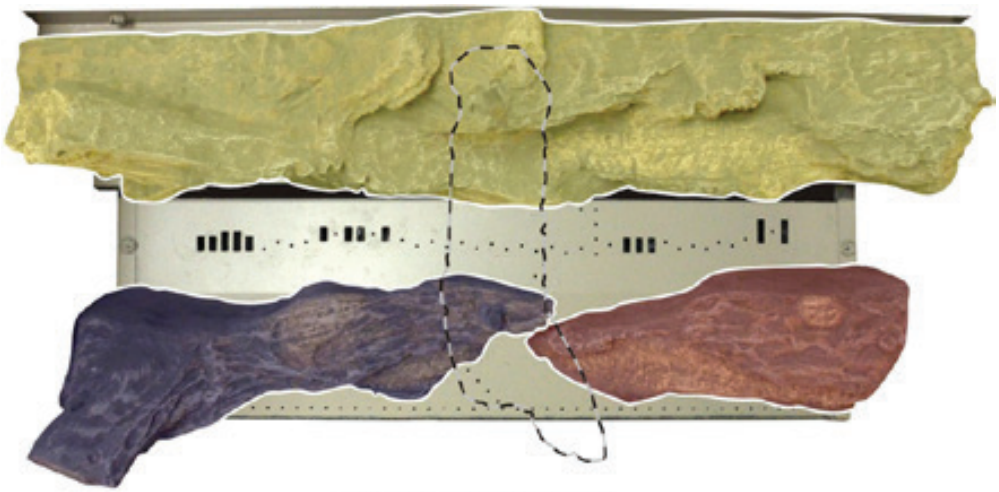

Top View

Front View

5. Assembly is completed.

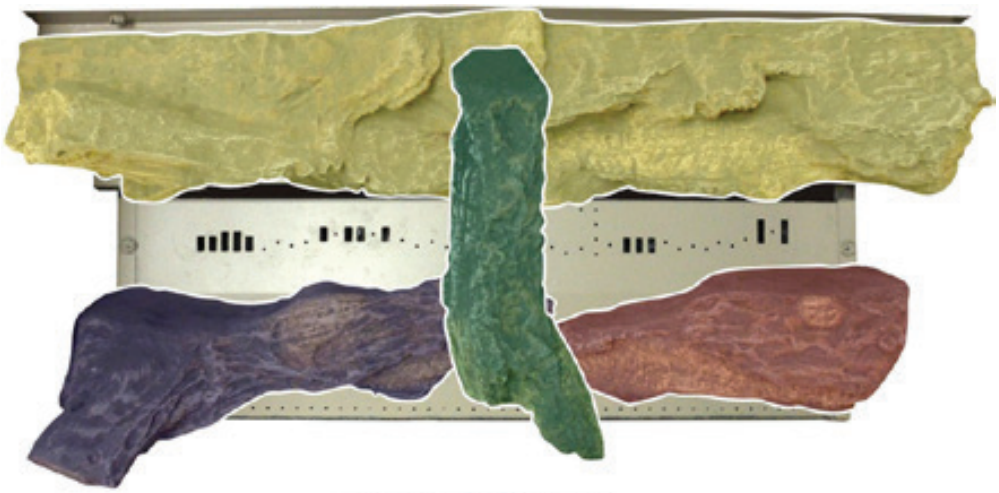

Top View

Front View

DVP30CC LOG IDENTIFICATION

Log Description	Part Number	Front View	Top View
Log A	29795		
Log B	29797		
Log C	29796		
Log D	29798		

DVP30CC LOG PLACEMENT

1. Place Log A onto the pins on the Log Support Shelf as shown below.

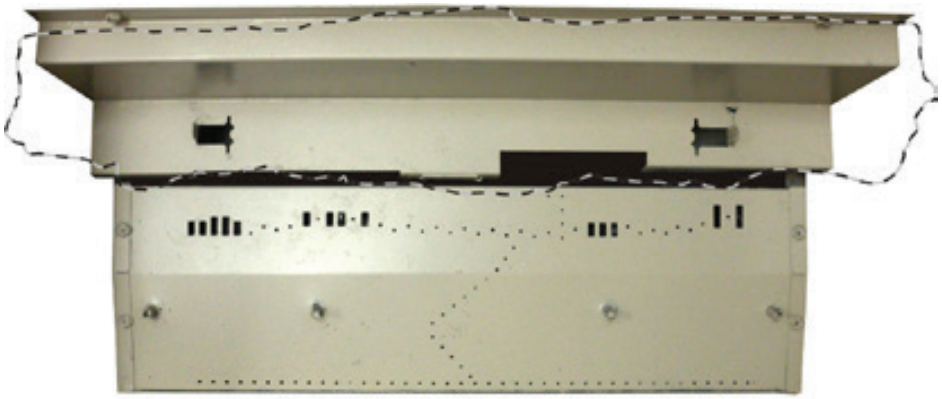

Top View

Front View

2. Place Log B onto the two right pins on the burner.

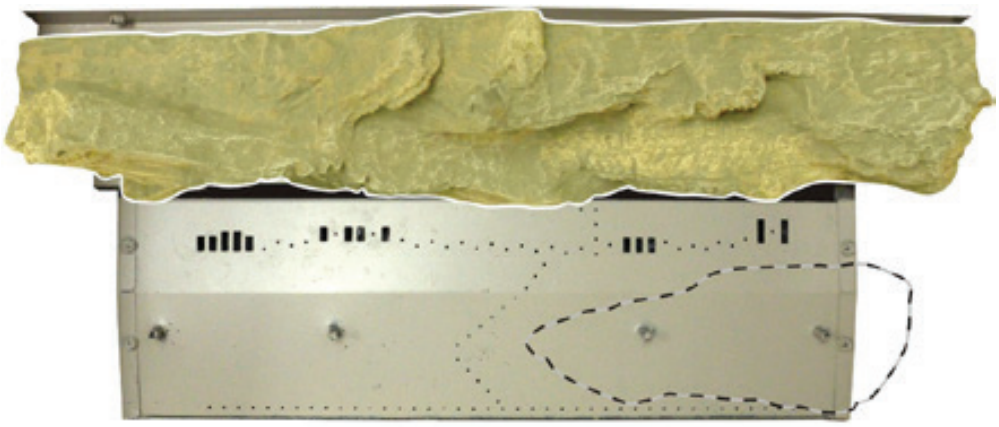

Top View

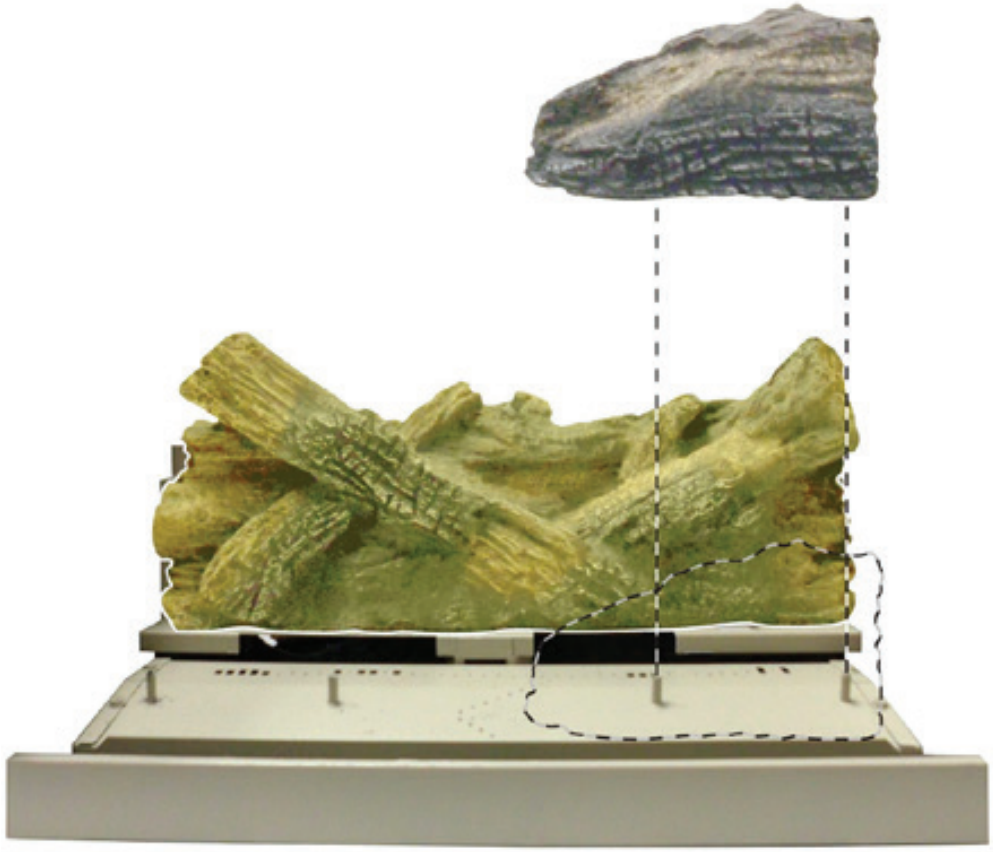

Front View

3. Place Log C onto the two left pins on the burner.

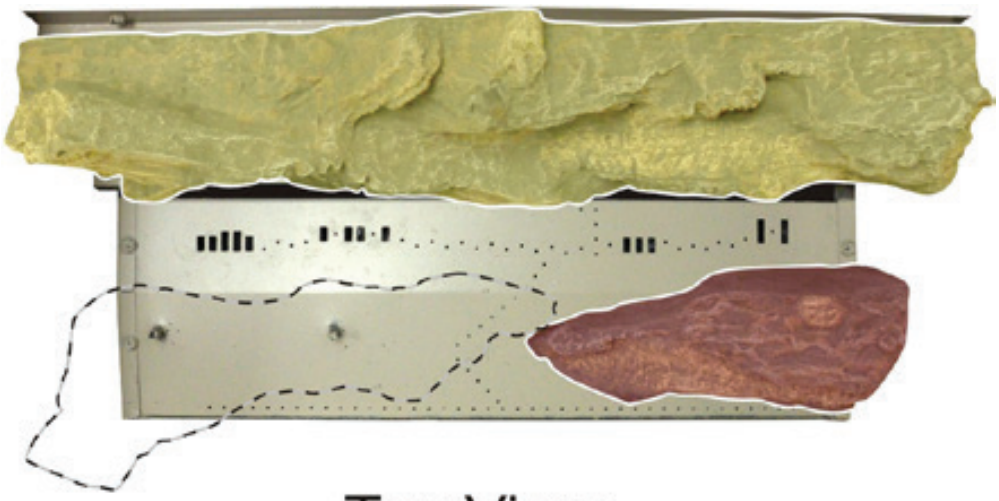

Top View

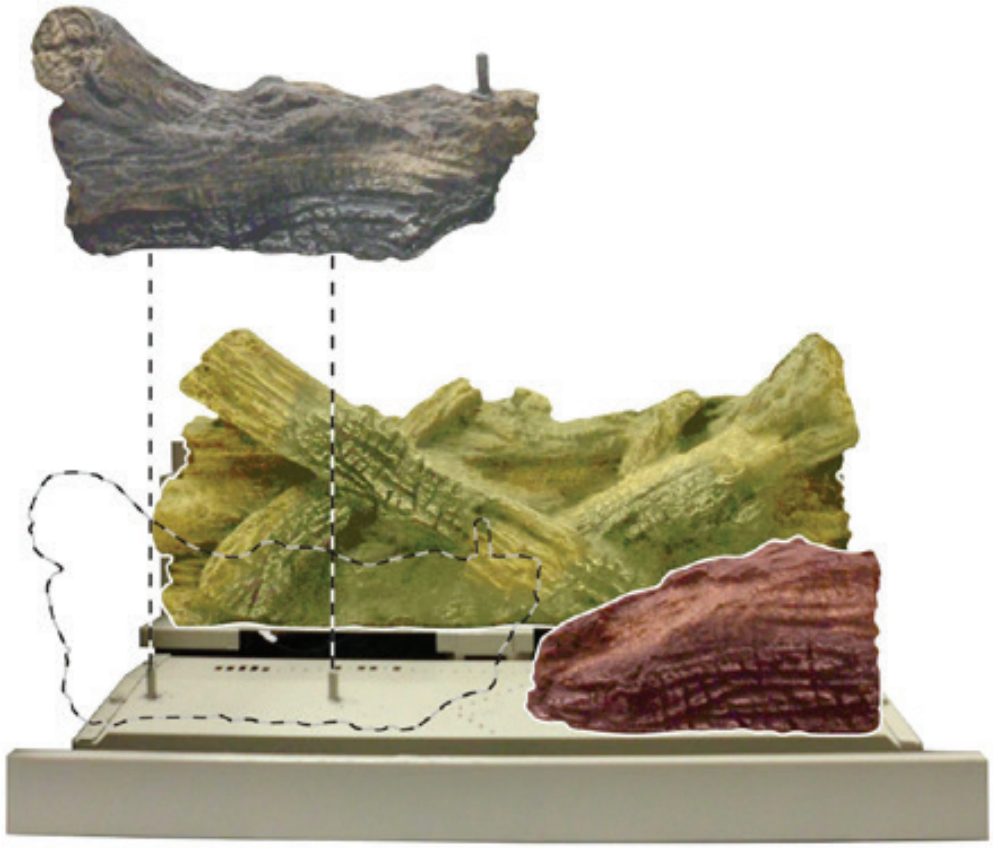

Front View

4. Place Log D on the pins on Logs A and C.
   *Place ember material on front burner ports as shown in Figure 25.

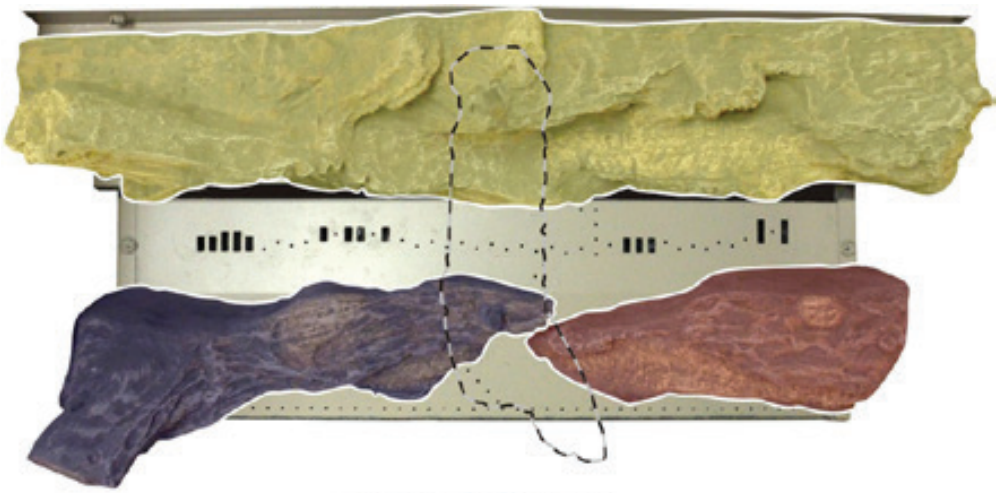

Top View

Front View

5. Assembly is completed.

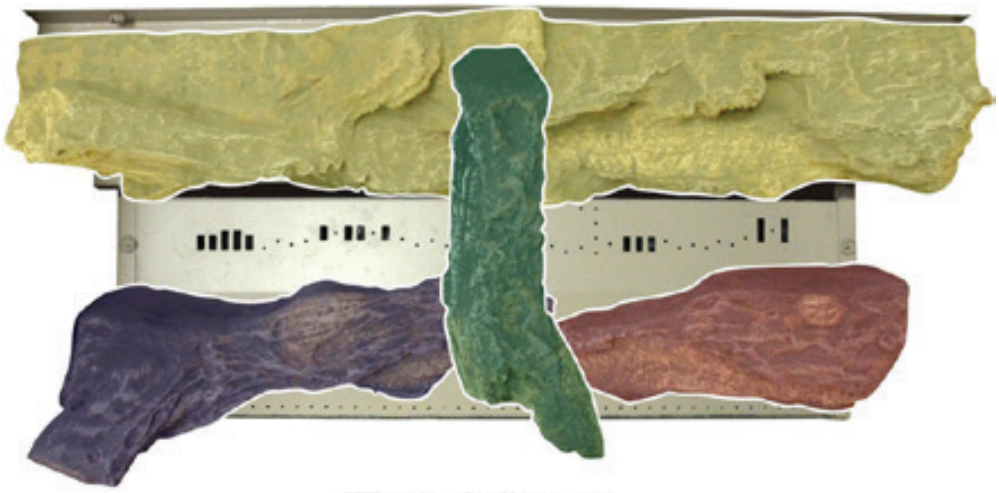

Top View

Front View

750 Millivolt System

The standing pilot (750 millivolt system) is a continuous burning pilot. The pilot remains ON even when the main burner is OFF.

When you ignite the pilot, the thermopile produces millivolts (electrical current) which energizes the magnet in the gas valve. After 30 seconds to 1 minute time period you can release the gas control knob and the pilot will stay ON. Allow your pilot flame to operate an additional one to two minutes before you turn the gas control knob from the PILOT position to the ON position. This time period allows the millivolts (electrical current) to build-up to a sufficient level allowing the gas control to operate properly.

1. Follow the SAFETY and LIGHTING INSTRUCTIONS for standing pilot controls found in this manual and on labels found in control compartment behind the door assembly.

⚠ WARNING

During the initial purging and subsequent lightings, never allow the gas valve control knob to remain depressed in the "pilot" position without pushing the piezo ignitor button at least once every second.

2. During the operating season, leave the control valve knob in the "ON" position. This will allow the pilot flame to remain lit. Turn the burner flame on or off with the stove REMOTE/OFF/ON switch, wall switch or remote controls.

***NOTICE*:** The gas control valve allows you to increase or decrease the height of the main burner flame. The control valve has a pressure regulator with a knob as shown in **Figure 27**. Rotate the knob clockwise to "HI" to increase the flame height and counterclockwise to "LO" to decrease the flame height.

3. When the operating season is over, turn the REMOTE/OFF/ON switch to "OFF" and the control valve to "OFF". The system, including the pilot light, will be shut down.

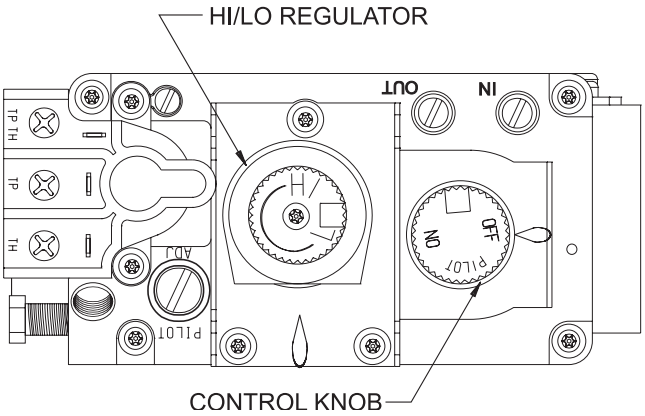

Figure 27

The OWNER should carefully read and follow these operating instructions at all times. Lower the door assembly to view the gas controls for the stove.

Initial Lighting

Upon completing the gas line or turning the gas valve on after it has been in the "OFF" position, a small amount of air will be in the lines. When first lighting the stove, it will take a few minutes for the lines to purge themselves of this air. Once the purging is complete, the stove will light and operate satisfactorily.

Subsequent lightings of the appliance will not require such purging if the gas valve is not turned to "OFF."

Pilot Flame

The thermopile/thermocouple (standing pilot) tips should be covered with flame.

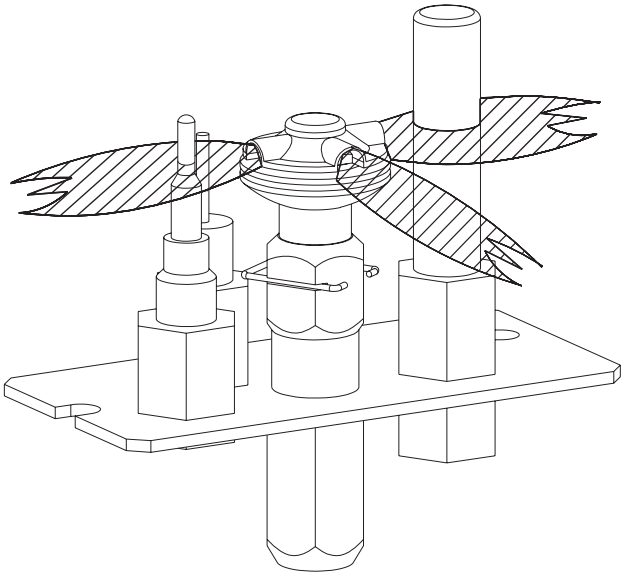

Figure 28

MAIN BURNER FLAME CHARACTERISTICS

Figure 29 shows a correct main burner flame pattern. Figure 30 shows an incorrect main burner flame pattern.

If main burner flame pattern is incorrect, as shown in Figure 28:

- See Troubleshooting, page 28 for Millivolt models and pages 32-34 for IP models.

Cleaning and Maintenance / Main Burner

⚠ WARNING
Turn off heater and let cool before cleaning.

After use, cleaning of the main burner may be required for the proper flame. The main burner may be cleaned by applying pressurized air to the ports on the main burner.

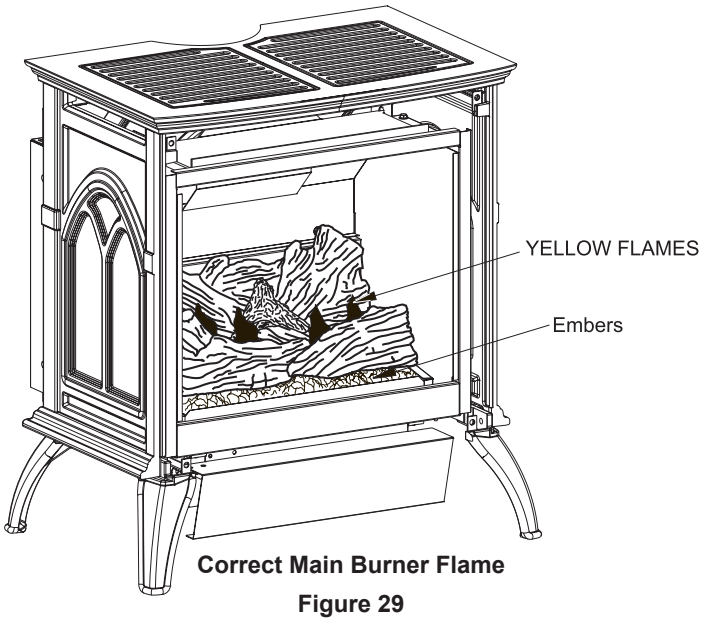

Correct Main Burner Flame

Figure 29

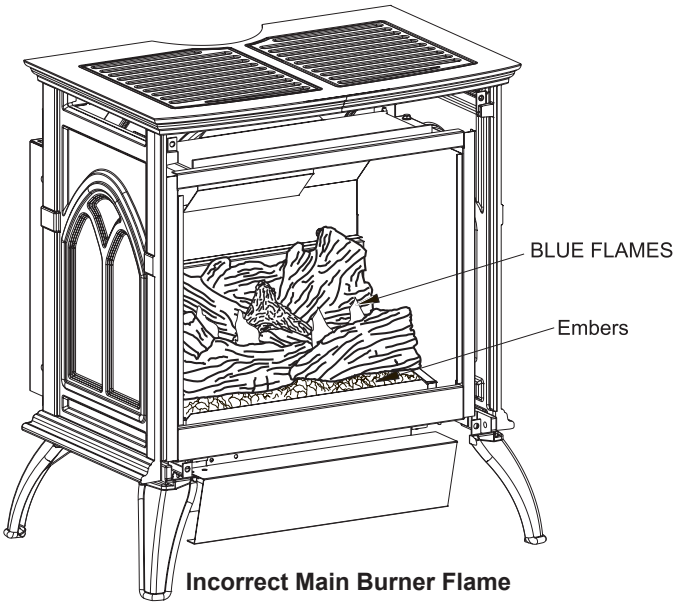

Incorrect Main Burner Flame

Figure 30

Cleaning the Log Set and Firebox

Do NOT handle these logs with your bare hands. Always wear gloves to prevent skin irritation. During the annual inspection and maintenance appointment, the service person should clean dust, lint, and any light accumulation from the logs and the firebox area. An extra-soft brush should be used on the logs as they are extremely fragile; a vacuum cleaner may be used on the firebox. If at any time the logs cannot be removed or installed without forcing, the cause must be found. The logs must never be forced.

⚠ CAUTION
The ceramic logs are durable when handled and installed properly. However, they are delicate and may be damaged easily if not handled with care. Handling damage to the ceramic logs is not covered by warranty.

DO NOT HANDLE LOGS WHILE THEY ARE HOT. ALLOW PLENTY OF TIME FOR THE APPLIANCE TO COOL COMPLETELY BEFORE HANDLING.

PLEASE NOTE
It is normal for appliances fabricated of steel to give off some expansion and/or contraction noised during the start up or cool down cycle. Similar noises are found with your furnace heat exchanger or car engine.

DVP(20,30)CC ON/OFF/REMOTE Switch

DVP(20,30)CC is equipped with an ON/OFF/REMOTE switch which is located on the wire channel located on the top, left side of the stove. A wire harness is attached to the ON/OFF/REMOTE switch. The red, black and green (wires) female push-ons attach to the ON/OFF/REMOTE switch. At the opposite end of the wire harness, the black and green (wires) female push-ons attach to the gas valve. An additional green wire and the red wire, which are stripped and bare, will attach to the 750 millivolt wall thermostat accessory, or, to one of the other accessories that can be purchased for use with your log set.

Operation of ON/OFF/REMOTE Switch with no Accessories

To ignite main burner, turn the control knob on the gas valve from the PILOT position to the ON position. Turn the ON/OFF/REMOTE switch from the OFF position to the ON position. The additional green wire and red wire, which are stripped and bare are not used.

Operation of ON/OFF/REMOTE Switch with Accessories
750 Millivolt Wall Thermostat

Connect the green and red, stripped and bare, wires on the ON/OFF/REMOTE switch wire harness to the wall thermostat. Turn the ON/OFF/REMOTE switch on the wire channel to the REMOTE position. Set the wall thermostat to the desired temperature.

It is important to use wire of a gauge proper for the length of the wire:

RECOMMENDED WIRE GAUGES

Maximum Length	Wire Gauge
1' to 10'	18
10' to 25'	16
25' to 35'	14

Wall Switch, FWS

Connect the green and red, stripped and bare, wires on the ON/OFF/REMOTE switch wire harness to the wall switch. Turn the ON/OFF/REMOTE switch on the wire channel to the REMOTE position. Pivot the rocker switch on the FWS to the ON position.

Battery Operated Remote Control, FRBC, FRBTP, TRW, and FRBTC

Connect the green and red, stripped and bare, wires on the ON/OFF/REMOTE switch wire harness to the remote receiver that is a component in the FRBC and FRBTC. Turn the ON/OFF/REMOTE switch on the wire channel to the REMOTE position. Follow instructions in the FRBC and FRBTC to complete installation.

NOTE: If batteries fail in FRBC or FRBTC, and immediate heat is desired, turn the ON/OFF/REMOTE switch on wire channel from the REMOTE position to the ON position.

Electric (120 volt) Operated Remote Control, FREC

Connect the green and red, stripped and bare, wires on the ON/OFF/REMOTE switch wire harness to the wires on remote receiver that is a component in the FREC. Turn the ON/OFF/REMOTE switch on the wire channel to the REMOTE position. Follow instructions in the FREC to complete installation.

NOTE: If electric (120 volt) fails in FREC, and immediate heat is desired, turn the ON/OFF/REMOTE switch on wire channel from the REMOTE position to the ON position.

1. Connect one wire from the 750 millivolt wall thermostat and one wire from appropriate accessory to the GREEN, stripped and bare wire from the ON/OFF/REMOTE wire harness.
2. Connect one wire from the 750 millivolt wall thermostat and one wire from appropriate accessory to the RED, stripped and bare wire from the ON/OFF/REMOTE wire harness.
   NOTE: When the appliance is in the MANUAL mode and the batteries fail in the FRBC or if the electric (120 volt) fails in the FREC, and immediate heat is desired, turn the ON/OFF/REMOTE switch on wire channel from the REMOTE position to the ON position.

Manual Operation

1. Turn ON/OFF/REMOTE switch on wire channel to REMOTE position.
2. Turn wall thermostat OFF.
3. Turn accessory, FRBC, FREC, FRBTP, TRW, FRBTC, or FWS, ON. Appliance is now in the manual mode. You must turn the appliance ON or OFF with appropriate accessory.

Wall Thermostat Operation

1. Turn the ON/OFF/REMOTE switch on wire channel to REMOTE position.
2. Turn accessory, FRBC, FREC, FRBTP, TRW, FRBTL-1, or FWS, OFF.
3. Turn wall thermostat ON and set appropriate temperature. Wall thermostat will cycle the appliance ON and OFF.

Installation of Remote Receiver

1. Attach, from left to right, the slide-on cover plate onto the remote receiver. **ON** will be to the top and **OFF** will be to the bottom on the slide-on cover plate.
2. Push the receiver slide button onto the receiver slide switch. Reverse installation of the slide button if it is off center.
3. Attach Velcro loop on the left side of the valve cover support.
4. Attach Velcro hook onto remote receiver. The word **TOP** on the remote receiver should be to the top when installed onto valve cover support.
5. Attach Velcro hook on remote receiver onto Velcro loop on valve cover support.

Refer to remote control installation and operating instructions for more details on remote control.

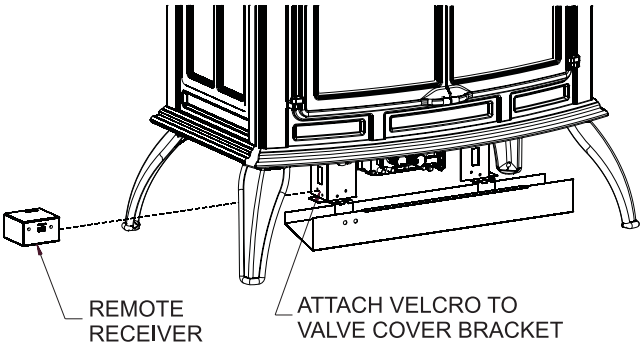

Figure 31

MILLIVOLT LIGHTING INSTRUCTIONS

FOR YOUR SAFETY READ BEFORE LIGHTING

WARNING: If you do not follow these instructions exactly, a fire or explosion may result causing property damage, personal injury or loss of life.

A. This appliance has a pilot which must be lighted by hand. When lighting the pilot, follow these instructions exactly.

B. BEFORE LIGHTING smell all around the appliance area for gas. Be sure to smell next to the floor because some gas is heavier than air and will settle on the floor.

WHAT TO DO IF YOU SMELL GAS

- **Do not try to light any appliance.**
- **Do not touch any electrical switch; do not use any phone in your building.**
- **Immediately call your gas supplier from a neighbor's phone. Follow the gas supplier's instructions.**
- **If you cannot reach your gas supplier, call the fire department.**

C. Use only your hand to push in or turn the gas control knob. Never use tools. If the knob will not push in or turn by hand, don't try to repair it; call a qualified service technician. Force or attempted repair may result in a fire or explosion.

D. Do not use this appliance if any part has been under water. Immediately call a qualified service technician to inspect the appliance and to replace any part of the control system and any gas control which has been under water.

LIGHTING INSTRUCTIONS

1. **STOP! Read the safety information on this page.**
2. **Set the thermostat to lowest setting**
3. **Turn OFF all electric power to the appliance (if applicable).**
4. **Lower valve cover.**
5. **Push in gas control knob slightly and turn clockwise to "OFF" position.**

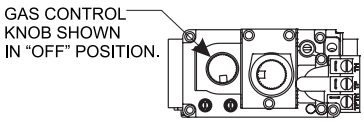

NOTE: Knob cannot be turned from "PILOT" to "OFF" unless knob is pushed slightly. Do not force.

6. **Wait ten minutes to clear out any gas. Then smell for gas, including near the floor. If you smell gas, STOP! Follow "B" in the safety information on this label. If you do not smell gas, go to the next step.**
7. **Find pilot - Follow metal tube from gas control. The pilot is behind the burner on the right side.**
8. **Turn gas control knob counterclockwise to "PILOT".**

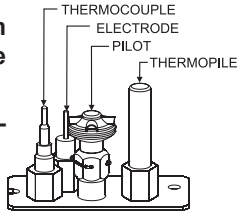

9. **Push in gas control knob all the way and hold in. Repeatedly push the Piezo Ignitor Button until the pilot is lit. Continue to hold the control knob in for about one minute after the pilot is lit. Release knob, and it will pop back up. Pilot should remain lit. If it goes out, repeat steps 5 through 9.**
   - **If knob does not pop up when released, stop immediately call a qualified service technician or gas supplier.**
   - **If the pilot will not stay lit after several tries, turn the gas control knob to "OFF" and call your service technician or gas supplier.**
10. **Turn gas control knob counterclockwise to "ON".**
11. **Raise valve cover.**
12. **Turn ON all electric power to the appliance (if applicable).**
13. **Set the thermostat to desired setting.**

TO TURN OFF GAS TO APPLIANCE

1. **Set the thermostat to lowest setting.**
2. **Turn off all electric power to the appliance if service is to be performed (if applicable).**
3. **Lower valve cover.**
4. **Push in gas control knob slightly and turn clockwise to "OFF". Do not force.**
5. **Raise valve cover.**

MILLIVOLT WIRING

For Standing Pilot Ignition Wiring

Appliance Requirements

⚠ WARNING

DO NOT CONNECT 110-120 VAC TO THE GAS CONTROL VALVE OR THE APPLIANCE WILL MALFUNCTION AND THE VALVE WILL BE DESTROYED.

Optional Wall Switch

Position the wall switch in the desired position on a wall. Run a maximum of 25 feet (7.8m) or less length of 18 A.W.G. minimum wire and connect it to the stove valve pigtails.

⚠ WARNING

DO NOT CONNECT THE 110-120 VAC TO THE WALL SWITCH OR THE CONTROL VALVE WILL BE DESTROYED.

⚠ WARNING

LABEL ALL WIRES PRIOR TO DISCONNECTION WHEN SERVICING CONTROL. WIRING ERRORS CAN CAUSE IMPROPER AND DANGEROUS OPERATION. VERIFY PROPER OPERATION AFTER SERVICING.

MILLIVOLT WIRING DIAGRAM

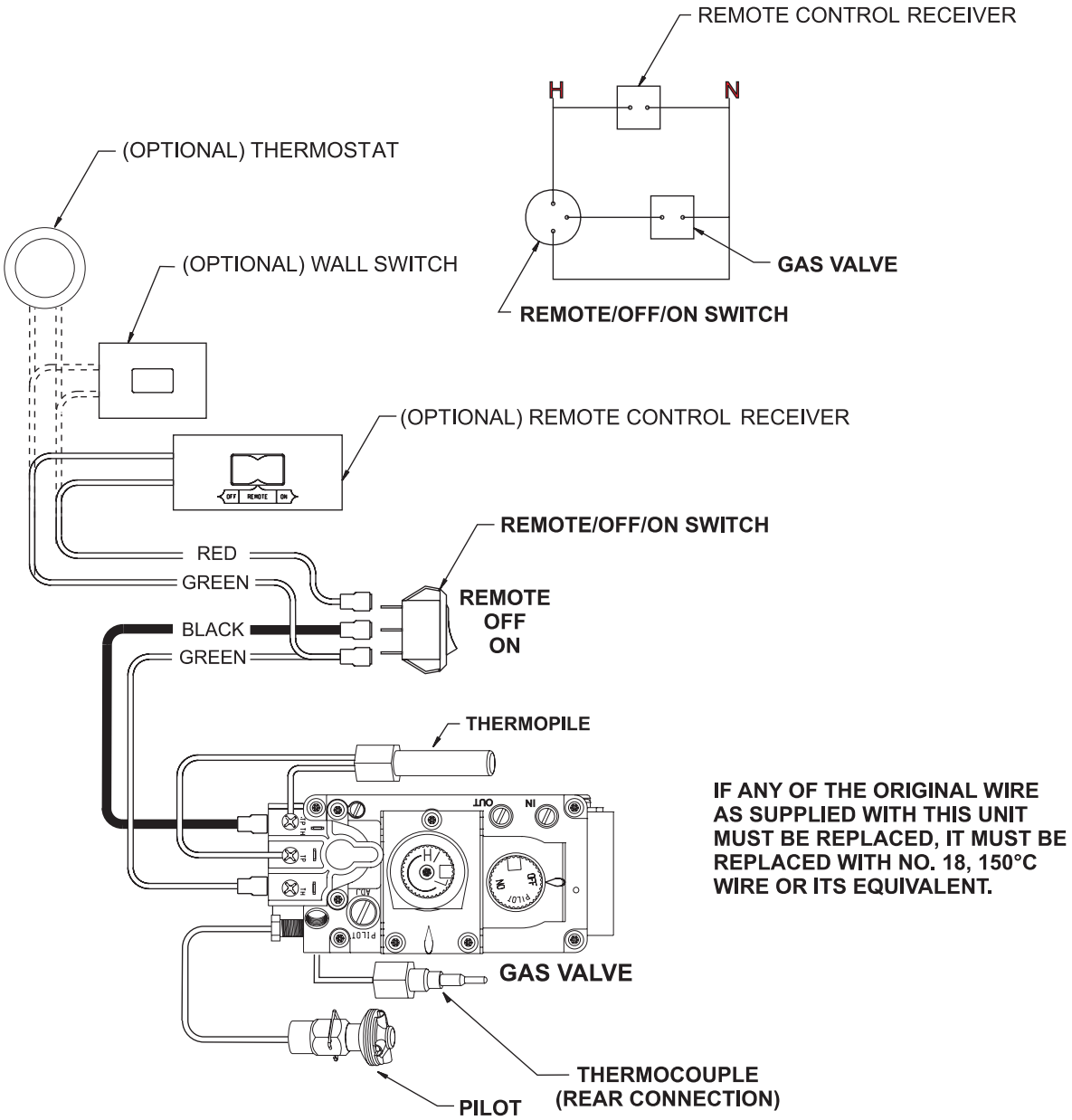

IF ANY OF THE ORIGINAL WIRE AS SUPPLIED WITH THIS UNIT MUST BE REPLACED, IT MUST BE REPLACED WITH NO. 18, 150°C WIRE OR ITS EQUIVALENT.

MILLIVOLT TROUBLESHOOTING

With proper installation and maintenance, your new Direct Vent Stove should provide years of trouble-free service. If you do experience a problem, refer to the Trouble Shooting Guide below. This guide will assist a qualified service person in the diagnosis of problems and the corrective action to be taken.

1. **Spark ignitor will not light pilot after repeated depressing of piezo ignitor button.**
   a. Defective ignitor (no spark at electrode) - Check for spark at electrode and pilot; if no spark and electrode wire is properly connected, replace ignitor.
   b. No gas or low gas pressure.
   - Check remote shut off valves from stove. Usually there is a valve near the main. There can be more than one valve between the stove and main.
   - Low pressure can be caused by a variety of situations such as a bent line, too narrow diameter of pipe, or low line pressure. Consult with plumber of gas supplier.
   c. No LP in tank.
   - Check LP (propane) tank. Refill tank.
2. **Pilot will not stay lit after carefully following lighting instructions.**
   a. Defective thermocouple.
   - Check that pilot flame impinges on thermocouple. Clean and/or adjust pilot for maximum flame impingement.
   - Ensure that the thermocouple connection at the gas valve is fully inserted and tight (hand tight plus 1/4 turn) faulty thermopile if reading is below specified minimum.
   - Disconnect the thermocouple from the valve, place one millivolt meter lead wire on the tip of the thermocouple and the other meter lead wire on the thermocouple copper lead. Start the pilot and hold the valve knob in. If the millivolt reading is less than 15 MV, replace the thermocouple.
   b. Defective valve.
   - If thermocouple is producing more than 15 millivolts, replace faulty valve
3. **Pilot burning, no gas to burner, valve knob "ON", on/off switch "ON."**
   a. "On/Off" switch, wall switch, or wires defective.
   - Check "on/off" switch and wires for proper connections. Place jumper wires across terminal at switch - if burner comes on, replace defective switch. If OK, place jumper wires across switch wires at gas valve-if burner comes on, wires are faulty or connections are bad.
   b. Thermopile may not be generating sufficient milli-voltage.
   - If the pilot flame is not close enough physically to the thermopile, adjust the pilot flame.
   - Be sure the wire connections from the thermopile at the gas valve terminals are tight and the thermopile is fully inserted into the pilot bracket.
   - Check the thermopile with a millivolt meter. Take the reading at TH-TP & TP terminals of the gas valve. The meter should read 325 millivolts minimum, while holding the valve knob depressed to the pilot position, with the pilot lit, and the ON/OFF switch in the OFF position. Replace the faulty thermopile if the reading is below the specified minimum.
   -With the pilot in the ON position, disconnect the thermopile leads from the valve. Take a reading at the thermopile leads. The reading should be 325 millivolts minimum. Replace the thermopile if the reading is below the minimum.
   c. Defective valve.
   - Turn valve knob to "ON." Place ON/OFF switch to "ON." Check with millivolt meter at thermopile terminals. Millivolt meter should read greater than 100 M.V. If the reading is okay and the burner does not come, replace the gas valve.
   d. Plugged main burner orifice.
   - Check main burner orifice for blockage, clean main burner orifice.
4. **Frequent pilot outage problem.**
   a. Pilot flame may be too high or too low, or blowing (high), causing pilot safety to drop out.
   - Clean and adjust flame for maximum flame impingement on the thermocouple. Follow lighting instructions carefully.
5. **The pilot and main burner extinguish while in operation.**
   a. No LP (Propane) in tank.
   - Check LP (Propane) tank. Refill fuel tank.
   b. Inner vent pipe leaking exhaust gases back into system.
   - Check for leaks.
   c. Glass too loose, gasket leaks in corners after usage.
   - Be certain glass assembly is installed correctly and tighten corner.
   d. Horizontal vent improperly pitched.
   - The horizontal vent cap should slope down only enough to prevent any water from entering the unit. The maximum downwards slope is 1/4 inch.
   e. Bad thermopile or thermocouple.
   - Replace if necessary.
   f. Improper vent cap installation.
   - Check for proper installation and freedom from debris or blockage.
6. **Glass soots.**
   a. Flame impingement on logs.
   - Adjust the log set so that the flame does not excessively impinge on it.
7. **Flame lifts off main burner.**
   a. Insufficient oxygen being supplied.
   - Check to make sure vent cap is installed properly and free of debris. Make sure that vent system joints are tight and have no leaks.
   - Check to make sure that no material has been placed at the burner base.
   - Be sure glass is tightened properly on unit, particularly on top corners.
8. **Doors open on their own.**
   a. Casting not level.
   - Loosen front leveling bolts to elevate front of casting slightly above the rear of casting.

IP OPERATING INSTRUCTIONS

Attention: For shipping purposes, the Electronic Control Module and Receiver Plate assembly is loosely packaged near the left side of the appliance. It is necessary that the receiver plate assembly be secured to the left front flange of the appliance at the time of installation. To secure, remove the two lower screws in the left side flange of the appliance, then place the receiver plate assembly over the left front flange and secure with the two screws previously removed.

5.25 VDC ELECTRONIC CONTROL VALVE

The electronic control valve system includes the ability to switch the pilot from a standing pilot mode to an intermittent pilot mode.

- **IPI Mode** - In the Intermittent Pilot mode, when the unit is turned ON, it will cause spark to the pilot, light the pilot, then allow the burner to light. When the unit is turned to OFF, both the burner and pilot will be OFF.
- **CPI Mode** - In the Continuess Pilot mode, the pilot remains ON continuously even when the burner is turned OFF.

NOTE: A small toggle switch is located on the receiver plate (left side of unit) that is used to switch from IPI (upward position) to the CPI (downward position). See Figure 32.

When the unit is turned to ON, the electrical current will energize a spark to the pilot igniter. Once the pilot sensor heats up (after a few seconds), the valve will be energized, allowing gas to flow to the burner.

1. Follow the SAFETY and LIGHTING INSTRUCTIONS for Intermittent Pilot controls found in this manual, and on labels found in the control compartment located in the lower cavity of the appliance.
2. During the operating season (or in power outage periods), it is recommended that the pilot remain in the CPI (standing pilot mode) to reduce cold start issues, and/or conserve battery backup power during a power outage.
3. The gas valve has inlet and outlet pressure taps as shown in Figure 32. Refer to page 8 for gas pressure requirements.

NOTE: The gas control has a manual HI/LO flame adjustment knob (regulator) that allows you to increase or decrease the height of the burner flame. See Figure 32. Rotate the HI/LO knob counterclockwise to “HI” to increase the flame height, and clockwise to “LO” to decrease the flame height.

OPTIONAL REMOTE CONTROLS

Optional remote controls are available for use with this appliance. There is an area on the Receiver Plate (between the Electronic Control module and the back-up battery pack) that the Remote Receiver should be placed. A velcro pad is pre-attached to the plate assembly for quick attachment of the remote receiver.

To connect the remote receiver to the appliance, first disconnect the ON/OFF switch wires from the white and green wire connectors and connect the wires from the remote receiver to the green and white wire connectors. See Figure 32.

Follow the instructions included with the remote control for programming and other operational information.

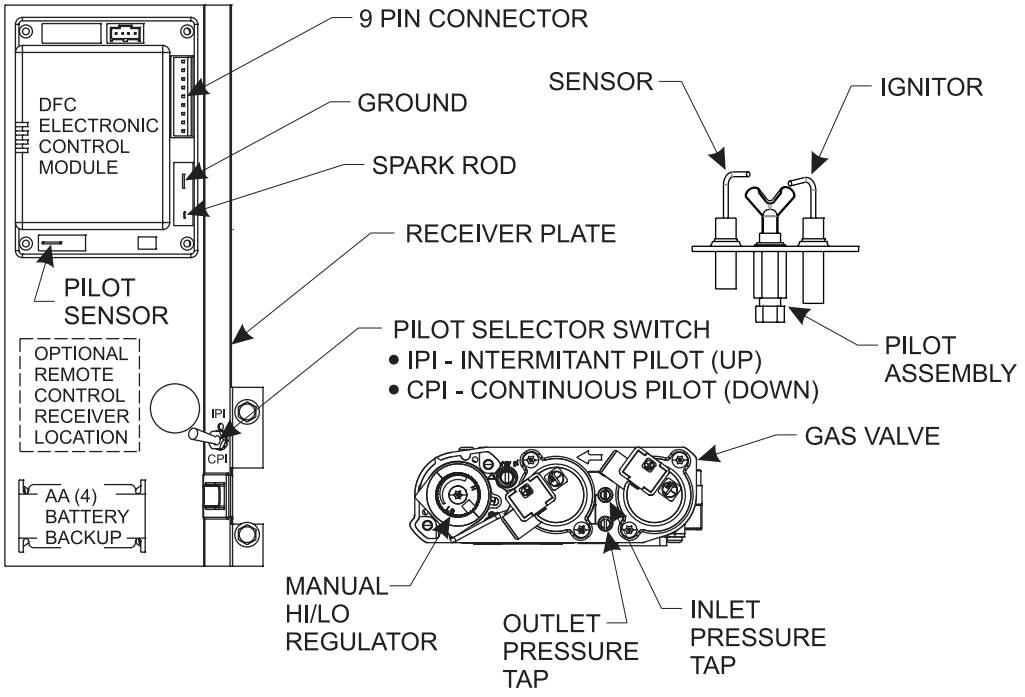

Figure 32

IP ELECTRONIC SYSTEM WIRING DIAGRAM

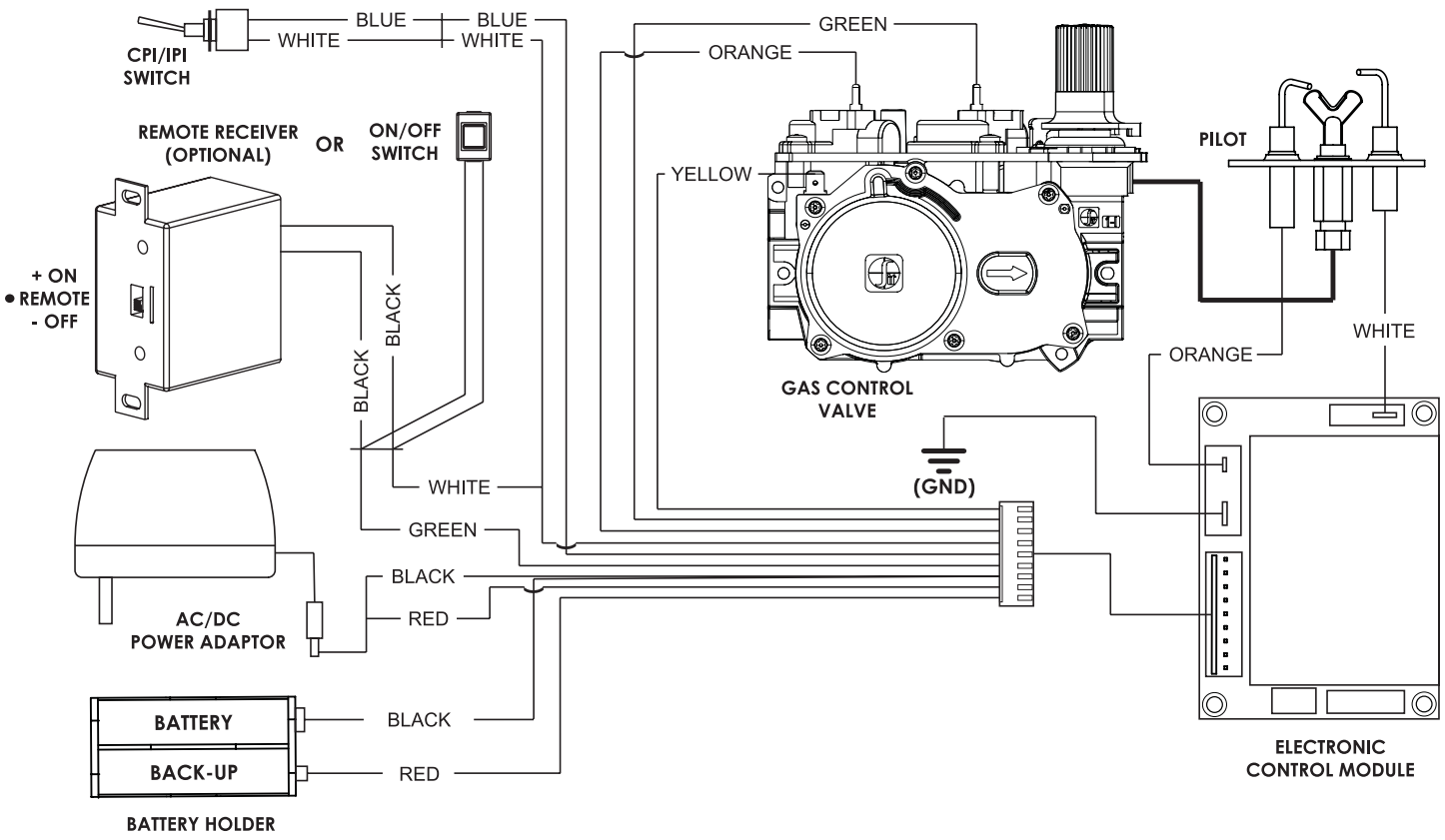

If any of the original wire as supplied with this unit must be replaced, it must be replaced with equivalent gauge and temperature rated wire.

This appliance is only for use with the type of gas indicated on the rating plate and may be installed in an aftermarket, permanently located, manufactured (mobile) home where not prohibited by local codes. This appliance is not convertible for use with other gases, unless a certified kit is used.

⚠ CAUTION

Do not operate the appliance with panel(s) removed, cracked or broken. Replacement of the panel(s) should be done by a licensed or qualified service person.

⚠ WARNING

Improper installation, adjustment, alteration, service or maintenance can cause property damage, personal injury or loss of life. Installation and service must be performed by a qualified installer, service agency or the gas supplier.

INTERMITTENT PILOT LIGHTING INSTRUCTIONS

FOR YOUR SAFETY READ BEFORE LIGHTING

⚠ WARNING: If you do not follow these instructions exactly, a fire or explosion may result causing property damage, personal injury or loss of life.

A. This appliance has a pilot which can be lighted with the manual on/off switch, a remote control, or by switching the receiver switch to the “ON” position. When lighting the pilot, follow these instructions exactly.

B. Before lighting smell all around the appliance area for gas. Be sure to smell next to the floor because some gas is heavier than air and will settle on the floor.

What To Do If You Smell Gas
- Do not try to light any appliance.
- Do not touch any electrical switch;
- Do not use any phone in your building.
- Immediately call your gas supplier from a neighbor's phone. Follow the gas supplier's instructions.
- If you cannot reach your gas supplier, call the fire department.

C. Use only your hand to push in or turn the gas control knob. Never use tools. If the knob will not push in or turn by hand, don't try to repair it; call a qualified service technician. Force or attempted repair may result in a fire or explosion.

D. Do not use this appliance if any part has been under water. Immediately call a qualified service technician to inspect the appliance and to replace any part of the control system and any gas control which has been under water.

LIGHTING INSTRUCTIONS

1. STOP! Read the safety information above.
2. Turn OFF electric power to the appliance.
3. Remove front surround panel assembly or bottom louver if included.
4. Turn gas cock counterclockwise to “On” position.
5. Wait ten minutes to clear out any gas. Then smell for gas, including near the floor. If you smell gas, STOP! Follow “B” in the safety information above on this page. If you do not smell gas, go to the next step.
6. Turn ON electric power to the appliance.
7. Find pilot - Follow metal tube from gas control. The pilot is behind the burner on the right side.
8. Turn main flame to on. If the pilot does not light within 60 seconds, stop and go to Step 5.
9. Refer to remote control instructions for detailed information, control features, and operation. **Note**: There is a CPI/IPI switch behind the right side panel that allows for a continuous standing pilot mode or an intermittent pilot mode. See appliance manual for location of this switch. If the pilot or burner does not stay lit (in the standing pilot mode), stop and immediately call a qualified service technician or gas supplier.
10. If the burner or pilot does not operate properly after several tries, turn the gas cock clockwise to “OFF” and call your service technician or gas supplier.
11. Replace the front surround assembly or close bottom louver assembly.
12. Operation of the gas valve is controlled by a manual on/off switch or a hand held remote control. Refer to remote instructions for detailed operation information.

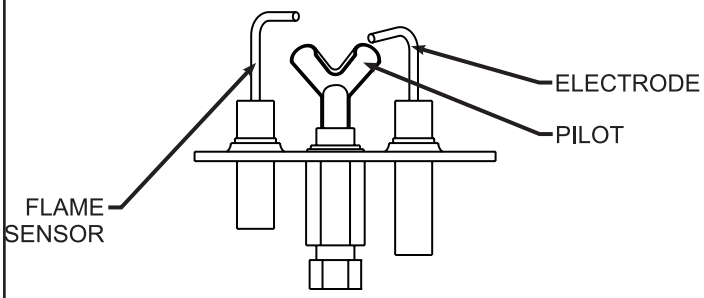

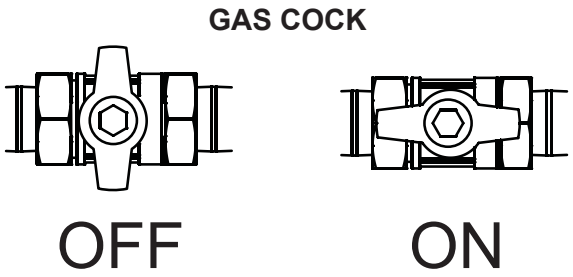

TO TURN OFF GAS TO FIREPLACE

1. Set REMOTE/OFF/ON switch to OFF.
2. Turn off all electric power to the appliance if service is to be performed (if applicable).
3. Lower bottom louver assembly.
4. Push in gas control knob slightly and turn clockwise to "OFF." Do not force.
5. Close bottom louver assembly.

INTERMITTENT CONTROL SYSTEM TROUBLESHOOTING

Brief Description of the Components

The gas valve is fitted with a manual HI/LO knob to allow for manual modulation of the gas outlet pressure to the appliance burner. The controls are designed to be used with either LPG or Natural Gas and can be converted by use of an OEM supplied conversion kit.

The Digital Fireplace Control (DFC) is an automatic gas ignition system based on a single microcontroller core. This control manages all functions related to ignition, flame sensing and supervision for atmospheric applications.

The DFC can be set to provide continuous or intermittent ignition control sequences and flame monitoring with safety shutdown in case of failure.

The DFC is set up as a stand alone (AC powered system with battery back up. See Lighting Instructions on page 31 and Wiring Diagram on page 30.

Troubleshooting

Before proceeding with the procedures in the following troubleshooting table, verify that the power supply (AC/DC adapter) is present and that the batteries inside the receiver and/or optional battery pack are fresh and installed with correct polarity.

Make sure all the connections between the wire harnesses and system components are proper and positive.

Verify that the static inlet pressure meets the manufacturer's recommended inlet pressure. If necessary adjust the line pressure regulator.

If the recommended actions for the following troubleshooting chart do not help to address the problem consider replacing wiring harnesses.

⚠ WARNING

Any actions performed on the gas valve must be performed in accordance with this instruction manual. Likewise, any actions performed on the DFC or other system components must be done in accordance with the individual component instructions.

Replacement of components must be performed in accordance with this instructions manual.

INTERMITTENT CONTROL SYSTEM TROUBLESHOOTING

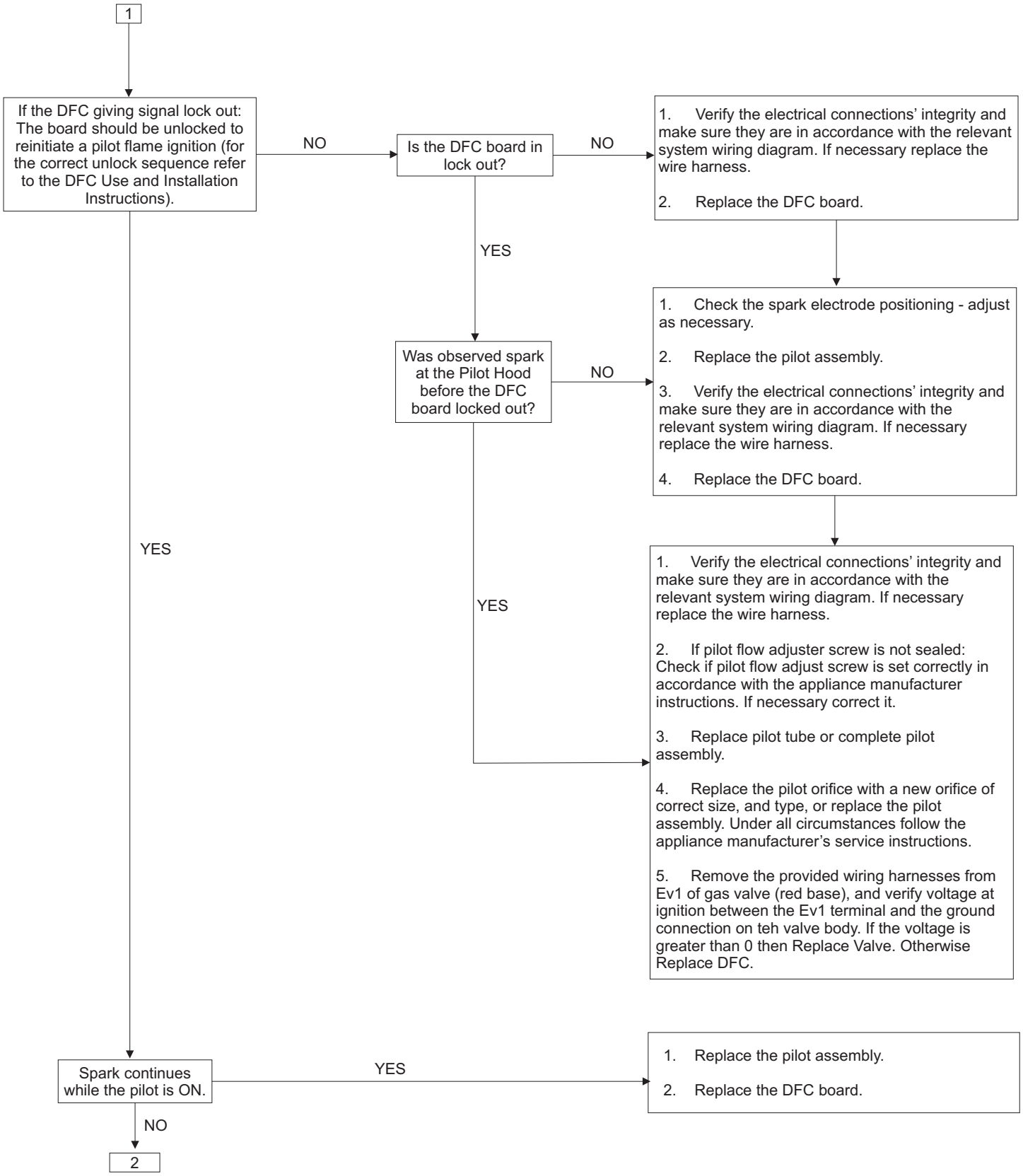

INTERMITTENT CONTROL SYSTEM TROUBLESHOOTING

2

Main burner lights when the pilot only should light.

YES →

1. Replace DFC board.
2. Replace the gas valve.

NO ↓

Pilot holds the flame?.

NO →

1. Verify the pilot flame fully engulfs the tip of the sense electrode. If not replace the pilot assembly.
2. Replace the pilot assembly.
3. Carefully clean the electrical connections of the sense cable, and the DFC board sense cable connection.
4. Replace the sense cable, or the cable-sense electrode assembly, or the pilot assembly.
5. Verify the pilot is properly grounded.
6. Replace the pilot orifice with a new orifice of correct size, and type, or replace the pilot assembly.
7. If pilot flow adjuster screw is not sealed, correct it.

YES ↓

Main burner ignites?

NO →

1. Verify the electrical connections' integrity and make sure they are in accordance with the relevant system wiring diagram. If necessary replace the wire harness.
2. Check if the optional remote transmitter is in "thermostat" or "on" mode and verifyt there is a call for heat (f using a thermostat remote). Adjust the setting for heat.
3. Verify that the pilot hood is properly fitted and a pilot flame is directed to properly ignite the main appliance burner.
4. Replace the main burner orifice with a new orifice of correct size and type, or replace the pilot assembly. Under all circumstances follow the service instructions.
5. Remove the provided wiring harnesses from EV2 of gas valve (red base), and verify voltage at ignition between the EV1 terminal and the ground connection on the valve body.
   5.1 If the voltage is greater than 0 then Replace Valve.
   5.2 Or Replace DFC.
6. Check the pressure at the outlet pressure test point out according to the manufacturer's instruction. If not in accordance, replace the gas valve.

YES ↓

Main burner remains ON

NO →

1. Verify the electrical connections' integrity and make sure they are in accordance with the relevant system wiring diagram. If necessary replace the wire harness.
2. Check the pressure at the outlet pressure test point out according the manufacturer's instruction. If not in accordance replace the gas valve.
3. With the system in the OFF position, connect the voltmeter between the EV2 terminal (green base) on the valve, and the ground on the valve body.
   Turn the system ON, let pilot light, and observe the following voltage sequence: once the pilot flame is proved, the voltage on EV2 should spike to approx. 5 VdC for approx. 2 sec and then drop to approx. 0.6 VdC continuously.
   3.1 If the sequence is respected, replace the gas valve.
   3.2 If the sequence is not respected, replace the DFC board.

↓

Main burner modulates properly?

→

1. Replace the main burner orifice with a new orifice of correct size (partial blockage possible). Verify that the main burner flame modulates. If it does not modulate replace the gas valve.
2. Verify that the gas valve outlet pressure limits are in accordance with the manufacturer specifications. If not replace the gas valve.

FOR MANUAL HI/LO VERSION

3. Verify the flame changes while rotating the HI/LO knob on the front of the gas valve. If there is no change replace the gas valve.

MAINTENANCE

A qualified service person recommended by your Empire dealer should conduct an annual inspection and maintenance of the appliance, its venting, and the installation to keep it running safely and efficiently. The following procedures should be performed only by a qualified service person. The gas supply should be turned off whenever a maintenance procedure is performed.

If the glass front, relief doors, or front access door are removed for servicing, they must be replaced prior to operating the appliance.

Glass Cleaning

It will be necessary to clean the glass periodically. During start-up condensation, which is normal, forms on the inside of the glass and causes lint, dust and other airborne particles to cling to the glass surface. Also initial paint curing may deposit a slight film on the glass. It is therefore recommended that the glass be cleaned two or three times with a non-abrasive household cleaner and warm water (we recommend gas fireplace glass cleaner). We do not recommend using packaged spray type household glass cleaner. After that the glass should be cleaned two or three times during each heating season depending on the circumstances present.

General Glass Information

Only glass approved for use in Empire Comfort Systems Inc. fireplaces may be used for replacement. The glass replacement should be done by a licensed or qualified service person.

⚠ WARNING

1. The use of substitute glass will void all product warranties.
2. Care must be taken to avoid breakage of the glass.
3. Under no circumstances should this appliance be operated without the glass front or with a broken glass front. Replacement of the glass (with gasket) as supplied by the manufacturer should be done by a qualified service person.
4. Do not abuse the glass by striking or hitting the glass.

⚠ WARNING

Do not use abrasive cleaners on glass. Do not attempt to clean glass when glass is hot.

Failure to follow these warnings could cause a serious safety issue to the operator, such as fire or other serious conditions.

Glass Assembly Replacement

1. Remove casting top from casting.
2. Remove casting front from casting.
3. Lower valve cover on firebox.
4. Release two door latches at bottom of firebox.
5. Grasp bottom of glass frame, lift glass frame upward in order to release glass frame from lip on top of firebox.
6. Place glass frame assembly on a non-abrasive surface. The exterior of the glass frame assembly should be facing the non-abrasive surface.
7. Insert a putty knife between glass and bottom corners on frame. Carefully separate glass from frame.
8. Use putty knife to remove silicone and gasket material from frame. Surface of frame must be clean and dry.
9. At each corner of frame apply two three-inch beads of high temperate (orange) silicone.
10. With thin gasket on glass facing silicone on frame, insert glass into frame. Carefully press the glass onto frame in order to have contact between glass and silicone.
11. Allow silicone to set-up for an adequate time
12. Align and place top of glass frame over lip on top of firebox. Grasp bottom of glass frame, push inward and place glass frame onto firebox.
13. Attach two door latches to bottom of firebox.
14. Replace casting front onto casting.
15. Replace casting top onto casting.
16. Replacement of glass assembly is completed.

SHOWN WITH TOP & FRONT REMOVED

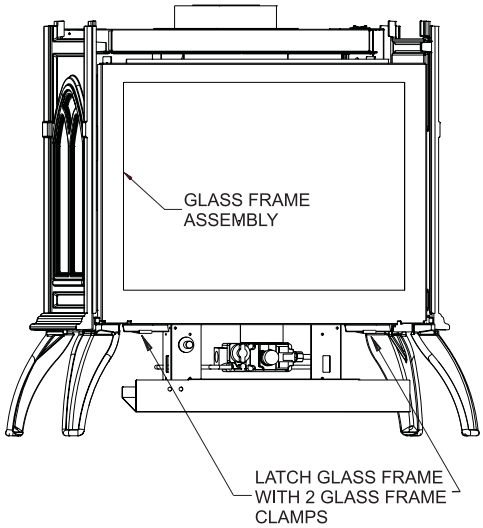

Figure 33

IMPORTANT: Turn off gas before servicing appliance. It is recommended that a competent service technician perform these check-ups at the beginning of each heating season.

- **DO NOT put anything around the heater that will obstruct the flow of combustion and ventilation air. See clearances.**
- **DO examine venting system periodically. Clean and replace damaged parts. Examinations should be made at the start of the heating season and also in mid heating season under average conditions.**
- **Clean Burner and Control Compartment**
  Keep the control compartment, logs, and burner areas surrounding the logs clean by vacuuming or brushing at least twice a year.

Cleaning Procedure

1. Let the unit cool if it has been operating.
2. Shut off gas supply.
3. Lower valve cover on firebox.
4. Release two door latches at bottom of firebox.
5. Grasp bottom of glass frame, lift glass frame upward in order to release glass frame from lip on top of firebox.
6. Vacuum burner compartment especially around orifice/primary air openings.
7. Align and place top of glass frame over lip on top of firebox. Grasp bottom of glass frame, push inward and place glass frame onto firebox.
8. Attach two door latches to bottom of firebox.
9. Ignite pilot. See **Lighting Instructions**, Page 26 for millivolt models and page 31 for IP models.
10. Operate the main burner and visually check to make sure the flame pattern appears similar to the pictorial illustration shown for **Main Burner Flame Characteristics**, Figure 29. If it appears abnormal call a service person.

MAINTENANCE AND SERVICE

Although the frequency of servicing and maintenance will depend on use and the type of installation, you should have a qualified service technician perform an appliance checkup at the beginning of each heating season. Specific guidelines regarding each appliance maintenance task are listed below.

IMPORTANT: TURN OFF THE GAS BEFORE SERVICING YOUR APPLIANCE.

Cleaning Burner and Controls

Frequency: Once annually.

By: Qualified service technician.

Task: Brush or vacuum the control compartment, stove logs and burner areas surrounding the logs.

Checking Flame Patterns, Flame Height

Frequency: Periodically.

By: Qualified service technician/Home owner.

Task: Make a visual check of your stove's flame patterns.

Make sure the flames are steady - not lifting or floating. The thermopile/thermocouple (standing pilot) tips should be covered with flame.

Checking Vent System

Frequency: Before initial use and at least annually thereafter, more frequently if possible.

By: Qualified service technician/Home owner.

Task: Inspect the external vent cap on a regular basis to ensure that no debris is interfering with the flow of air. Inspect entire vent system for proper function.

NOTICE: Prior to operating this unit, be sure to clean the interior porcelain coated liner panels and glass door with a soft clean cloth. Due to normal manufacturing processes, fingerprints along with excess sealing materials may be present and should be removed. When cleaning, do not use abrasives on the porcelain liners or the glass door assembly.

Cleaning

Use a soft brush attachment on a vacuum cleaner to gently remove dust or soot deposits from liners and burner.

Cleaning Glass Door

Frequency: After the first 3 to 4 hours of use. As necessary after initial cleaning.

By: Home owner.

Task: Remove and clean glass after the first 3 to 4 hours of use. After the initial cleaning, clean as necessary. Film deposits on the inside of the glass door should be cleaned off using a household glass cleaner.

⚠ CAUTION
Use only ammonia free, nonabrasive glass cleaners.

⚠ CAUTION
DO NOT handle or attempt to clean the door when it is hot and DO NOT use abrasive cleaners.

MASTER PARTS DISTRIBUTOR LIST

To Order Parts Under Warranty, please contact your local Empire dealer. See the dealer locator at www.empirecomfort.com. To provide warranty service, your dealer will need your name and address, purchase date and serial number, and the nature of the problem with the unit.

To Order Parts After the Warranty Period, please contact your dealer or one of the Master Parts Distributors listed below. This list changes from time to time. For the current list, please click on the Master Parts button at www.empirecomfort.com.

Please note: Master Parts Distributors are independent businesses that stock the most commonly ordered Original Equipment repair parts for Heaters, Grills, and Fireplaces manufactured by Empire Comfort Systems Inc.

Dey Distributing
1401 Willow Lake Boulevard
Vadnais Heights, MN 55101

Phone: 651-490-9191
Toll Free: 800-397-1339
Website: www.deydistributing.com
Parts: Heater & Hearth

East Coast Energy Products
10 East Route 36
West Long Branch, NJ 07764

Phone: 732-870-8809
Toll Free: 800-755-8809
Fax: 732-870-8811
Website: www.eastcoastenergy.com
Parts: Heater & Hearth and Grills

Victor Division of F. W. Webb Company
200 Locust Street
Hartford, CT 06114

Phone: 860-722-2433
Toll Free: 800-243-9360
Fax: 860-293-0479
Toll Free Fax: 800-274-2004
Websites: www.fwwebb.com & www.victormfg.com
Parts: Heater & Hearth and Grills

HOW TO ORDER REPAIR PARTS

Parts Not Under Warranty

Parts can be ordered through your Service Person, Dealer, or a Master Parts Distributor. See this page for the Master Parts Distributors list. For best results, the **service person or dealer** should order parts through the distributor. Parts can be shipped directly to the **service person/dealer**.

Warranty Parts

Warranty parts will need a proof of purchase and can be ordered by your Service Person or Dealer. Proof of purchase is **required** for warranty parts.

All parts listed in the Parts List have a Part Number. When ordering parts, first obtain the Model Number and Serial Number from the name plate on your equipment. Then determine the Part Number (**not** the Index Number) and the Description of each part from the following illustration and part list. Be sure to give all this information . . .

Appliance Model Number _____ Part Description _____

Appliance Serial Number _____ Part Number _____

Type of Gas (Propane or Natural) _____

Do not order bolts, screws, washers or nuts. They are standard hardware items and can be purchased at any local hardware store.

Shipments contingent upon strikes, fires and all causes beyond our control.

DVP20CC(30,70)PARTS LIST

INDEX NO.	PART NUMBER				DESCRIPTION
	DVP20CC30 LP	DVP20CC30 NAT	DVP20CC70 LP	DVP20CC70 NAT	
1	R9672	R9672	R9672	R9672	INLET VENT COLLAR
2	M178	M178	M178	M178	INLET COLLAR GASKET
3	30602	30602	30602	30602	AIR DROP ASSEMBLY
4	M163	M163	M163	M163	FLUE OUTLET GASKET
5	30392	30392	30392	30392	BLOW PLATE BRACKET
6	30989	30989	30989	30989	BLOW PLATE ASSEMBLY
7	30767	30767	30767	30767	PILOT SHIELD
8	30686	30686	30686	30686	REAR LOG SUPPORT
9	—	R7612	—	R10423	PILOT ASSEMBLY, NAT
9	R7611	—	R10424	—	PILOT ASSEMBLY, LPG
10	R9189	R9189	R9189	R9189	PILOT GASKET (2 REQUIRED FOR DVP20CC70)
10	R7617	R7617	—	—	PILOT GASKET
11	30457	30457	30457	30457	BURNER ASSEMBLY
12	R5676	R5676	R5676	R5676	AIR SHUTTER
13	30471	30471	30471	30471	GLASS FRAME ASSEMBLY
14	M174	M174	M174	M174	GASKET
15	30597	30597	30601	30601	FIREBOX BOTTOM
16	R4053	R4053	R4053	R4053	DOOR CLAMP
17	P253	P253	P253	P253	FITTING, ORIFICE ANGLED
18	11269	11269	11269	11269	GAS LINE BRACKET
19	30462	30462	30622	30622	TUBING ASSEMBLY, INLET
20	—	P316	—	P316	ORIFICE 2.15MM
20	P182	—	P182	—	ORIFICE # 55
21	R2423	R2423	R2423	R2423	CONNECTOR, MALE 5/16 X 3/8 NPT - BODY ONLY
22	29526	29526	29770	29770	VALVE BRACKET
23	R7578	—	R11126	—	VALVE, LPG
23	—	R7577	—	R11125	VALVE, NAT
24	—	—	30930	30930	IP CONTROL BRACKET
25	—	—	R11123	R11123	WIRE HARNESS (INCLUDES PILOT SWITCH)
26	—	—	R11127	R11127	CONTROL BOARD
27	—	—	R11122	R11122	BATTERY HOLDER, AA WITH SNAP-ON
28	29861	29861	29861	29861	VALVE COVER WELDED ASSEMBLY
29	R9760	R9760	—	—	PIEZO W/RED IGNITOR
30	29793	29793	29793	29793	BRANCH TOP
31	29790	29790	29790	29790	LOG REAR
32	29791	29791	29791	29791	LOG LEFT
33	29792	29792	29792	29792	LOG RIGHT
34	R3436	R3436	R11558	R11558	REMOTE/OFF/ON SWITCH
35	30679	30679	30679	30679	WIRE CHANEL - RIGHT
36	30680	30680	30680	30680	WIRE CHANEL - LEFT
37	30628	30628	30628	30628	REAR COVER - LEFT
38	30627	30627	30627	30627	REAR COVER - RIGHT
NS	R9698	R9698	—	—	WIRE ASSEMBLY
NS	—	—	R8195	R8195	ECO WIRE ASSEMBLY
NS	R7591	R7591	R7591	R7591	FLEX LINE
NS	—	—	R11128	R11128	POWER ADAPTOR

NS - NOT SHOWN

DVP20CC(30,70)PARTS VIEW

PLEASE NOTE: When ordering parts, it is very important that part number and description of part coincide.

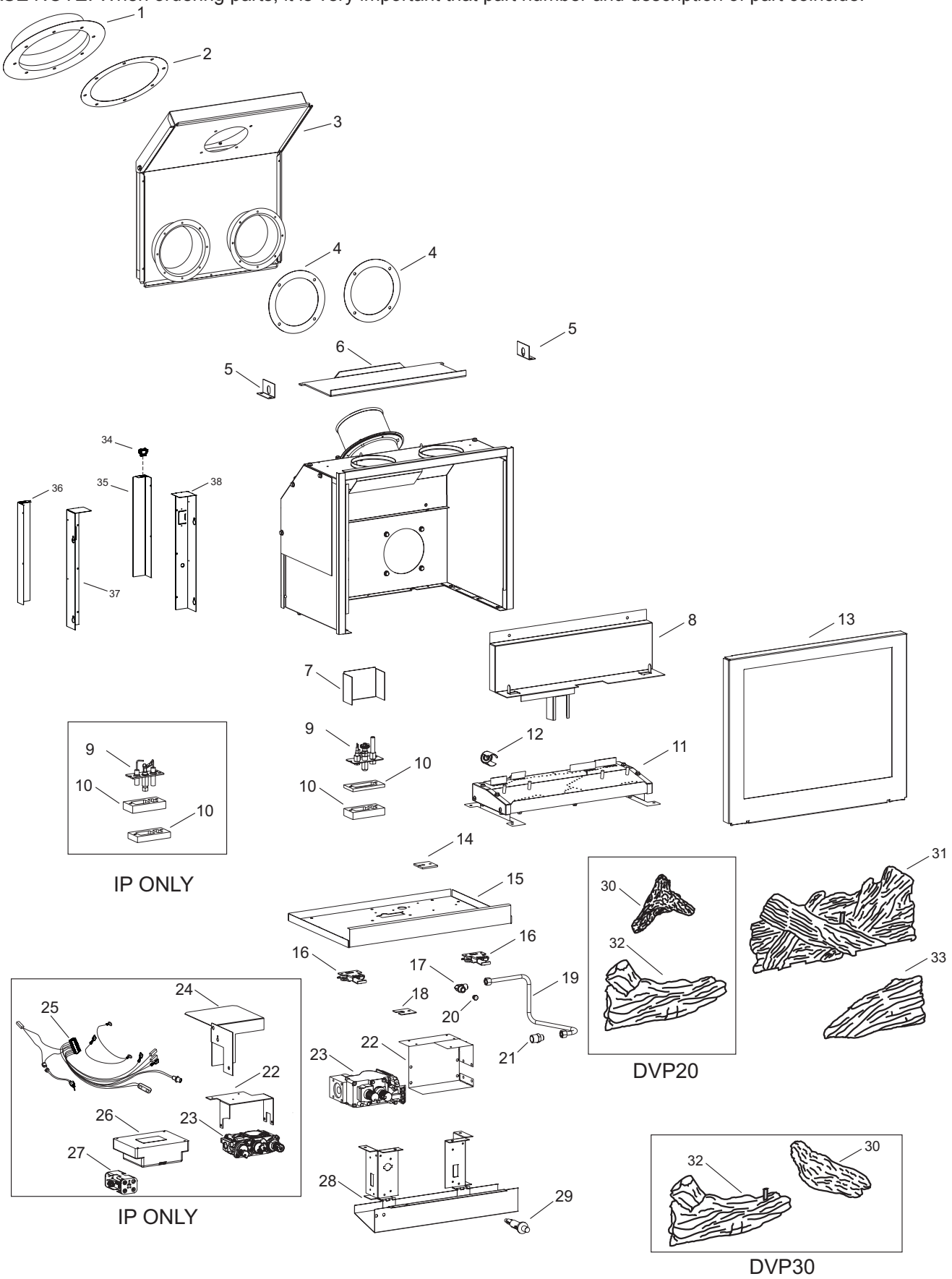

USE ONLY MANUFACTURER'S REPLACEMENT PARTS. USE OF ANY OTHER PARTS COULD CAUSE INJURY OR DEATH.

DVP30CC(30,70) PARTS LIST

INDEX NO.	PART NUMBER				DESCRIPTION
	DVP30CC30 LP	DVP30CC30 NAT	DVP30CC70B LP	DVP30CC70B NAT	
1	R7566	R7566	R7566	R7566	INLET VENT COLLAR
2	M178	M178	M178	M178	INLET COLLAR GASKET
3	30892	30892	30892	30892	AIR DROP ASSEMBLY
4	M163	M163	M163	M163	FLUE OUTLET GASKET
5	30392	30392	30392	30392	BLOW PLATE BRACKET
6	24398	24398	24398	24398	BLOW PLATE ASSEMBLY
7	30931	30931	30931	30931	PILOT SHIELD
8	30880	30880	30880	30880	REAR LOG SUPPORT
9	—	R7612	—	R10423	PILOT ASSEMBLY, NAT
9	R7611	—	R10424	—	PILOT ASSEMBLY, LPG
10	R9189	R9189	R9189	R9189	PILOT GASKET
10	—	—	R7617	R7617	PILOT GASKET
11	30899	30899	30899	30899	BURNER ASSEMBLY
12	R5676	R5676	R5676	R5676	AIR SHUTTER
13	24185	24185	24185	24185	GLASS FRAME ASSEMBLY
14	M174	M174	M174	M174	GASKET
15	29762	29762	30620	30620	FIREBOX BOTTOM
16	R4053	R4053	R4053	R4053	DOOR CLAMP
17	P253	P253	P253	P253	FITTING, ORIFICE ANGLED
18	11269	11269	11269	11269	GAS LINE BRACKET
19	29764	29764	30621	30621	TUBING ASSEMBLY, INLET
20	—	P285	—	P285	ORIFICE #39
20	P258	—	P258	—	ORIFICE 1.55MM
21	R2423	R2423	R2423	R2423	CONNECTOR, MALE 5/16 X 3/8 NPT - BODY ONLY
22	29526	29526	29770	29770	VALVE BRACKET
23	R7578	—	R11126	—	VALVE, LPG
23	—	R7577	—	R11125	VALVE, NAT
24	—	—	30930	30930	IP CONTROL BRACKET
25	—	—	R11123	R11123	WIRE HARNESS (INCLUDES PILOT SWITCH)
26	—	—	R11127	R11127	CONTROL BOARD
27	—	—	R11122	R11122	BATTERY HOLDER, AA WITH SNAP-ON
28	24727	24727	24727	24727	VALVE COVER WELDED ASSEMBLY
29	R9760	R9760	—	—	PIEZO W/RED IGNITOR
30	29798	29798	29798	29798	BRANCH TOP
31	29795	29795	29795	29795	LOG REAR
32	29796	29796	29796	29796	LOG LEFT
33	29797	29797	29797	29797	LOG RIGHT
34	R3436	R3436	R11558	R11558	REMOTE/OFF/ON SWITCH
35	30679	30679	30679	30679	WIRE CHANEL - RIGHT
36	30680	30680	30680	30680	WIRE CHANEL - LEFT
37	30628	30628	30628	30628	REAR COVER - LEFT
38	30627	30627	30627	30627	REAR COVER - RIGHT
NS	R9698	R9698	—	—	WIRE ASSEMBLY
NS	—	—	R8195	R8195	ECO WIRE ASSEMBLY
NS	R7591	R7591	R7591	R7591	FLEX LINE
NS	—	—	R11128	R11128	POWER ADAPTOR

NS - NOT SHOWN

DVP30CC(30,70) PARTS VIEW

PLEASE NOTE: When ordering parts, it is very important that part number and description of part coincide.

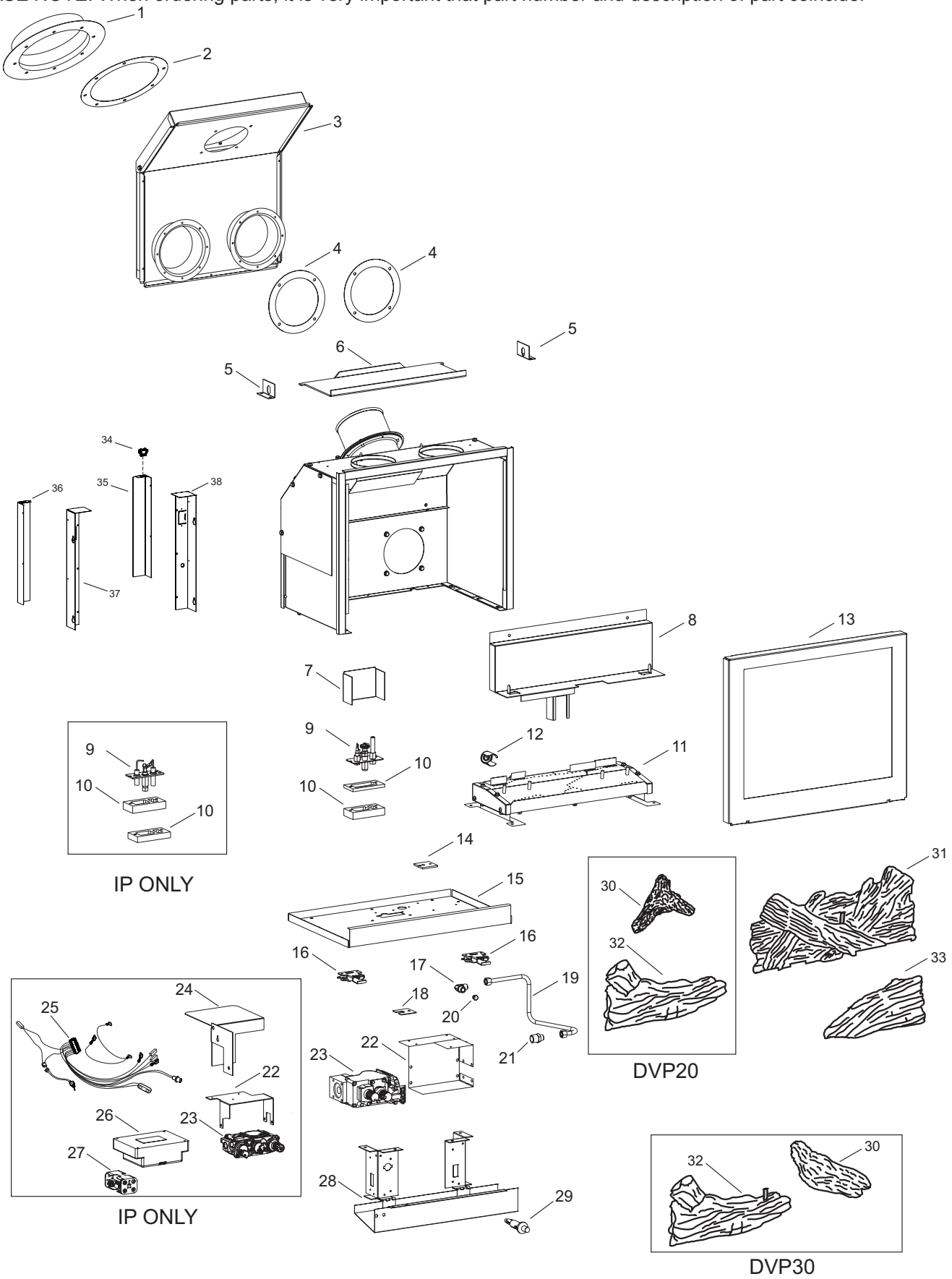

USE ONLY MANUFACTURER'S REPLACEMENT PARTS. USE OF ANY OTHER PARTS COULD CAUSE INJURY OR DEATH.

CASTING PARTS LIST

PLEASE NOTE: When ordering parts, it is very important that part number and description of part coincide.

INDEX NO.	PART NO.		DESCRIPTION
	DVP20CC	DVP30CC	
COMMON PARTS			
11	R9671	R9671	INSERT TAB (4 REQUIRED)
14	34966	34973	BARRIER SCREEN*
NS	N/A	R9669	HINGE PIN (4 REQUIRED)
NS	R9670	R9670	BOLT, 1/4-20 X 1/2" (24 REQUIRED)
MATTE BLACK			
1	N/A	R11354	VENT OPENING INSERT MIDDLE
2	N/A	R9538	TOP INSERT - RIGHT
3	N/A	R9537	TOP INSERT - LEFT
4	R11307	R9536	CASTING TOP
5	R11309	R9666	CASTING FRONT
6	R11306	R9535	CASTING SIDE - RIGHT
7	R11305	R9534	CASTING SIDE - LEFT
8	N/A	R9668	CASTING DOOR - RIGHT
9	N/A	R9667	CASTING DOOR - LEFT
10	24191	24191	FIREBOX SUPPORT BRACKET (2 REQUIRED)
12	R11304	R9533	CASTING LEG B
13	R11303	R9532	CASTING LEG A
MATTE PEWTER			
1	N/A	R11356	VENT OPENING INSERT MIDDLE
2	N/A	R9554	TOP INSERT - RIGHT
3	N/A	R9553	TOP INSERT - LEFT
4	N/A	R9552	CASTING TOP
5	N/A	R9693	CASTING FRONT
6	N/A	R9551	CASTING SIDE - RIGHT
7	N/A	R9550	CASTING SIDE - LEFT
8	N/A	R9695	CASTING DOOR - RIGHT
9	N/A	R9694	CASTING DOOR - LEFT
10	N/A	24191	FIREBOX SUPPORT BRACKET (2 REQUIRED)
12	N/A	R9549	CASTING LEG B
13	N/A	R9548	CASTING LEG A

***NOTE: A barrier screen is required for operation of this appliance. Follow the instructions that came with your barrier screen for installation.**

INDEX NO.	PART NO.		DESCRIPTION
	DVP20CC	DVP30CC	
PORCELAIN BLACK			
1	N/A	R11355	VENT OPENING INSERT MIDDLE
2	N/A	R9570	TOP INSERT - RIGHT
3	N/A	R9569	TOP INSERT - LEFT
4	R11314	R9568	CASTING TOP
5	R11316	R9681	CASTING FRONT
6	R11313	R9567	CASTING SIDE - RIGHT
7	R11312	R9566	CASTING SIDE - LEFT
8	N/A	R9683	CASTING DOOR - RIGHT
9	N/A	R9682	CASTING DOOR - LEFT
10	24191	24191	FIREBOX SUPPORT BRACKET (2 REQUIRED)
12	R11311	R9565	CASTING LEG B
13	R11310	R9564	CASTING LEG A
PORCELAIN SAND			
1	N/A	R11358	VENT OPENING INSERT MIDDLE
2	N/A	R9586	TOP INSERT - RIGHT
3	N/A	R9585	TOP INSERT - LEFT
4	N/A	R9584	CASTING TOP
5	N/A	R9700	CASTING FRONT
6	N/A	R9583	CASTING SIDE - RIGHT
7	N/A	R9582	CASTING SIDE - LEFT
8	N/A	R9702	CASTING DOOR - RIGHT
9	N/A	R9701	CASTING DOOR - LEFT
10	N/A	24191	FIREBOX SUPPORT BRACKET (2 REQUIRED)
12	N/A	R9581	CASTING LEG B
13	N/A	R9580	CASTING LEG A
PORCELAIN MAHOGANY			
1	N/A	R11356	VENT OPENING INSERT MIDDLE
2	N/A	R9602	TOP INSERT - RIGHT
3	N/A	R9601	TOP INSERT - LEFT
4	R11321	R9600	CASTING TOP
5	R11323	R9707	CASTING FRONT
6	R11320	R9599	CASTING SIDE - RIGHT
7	R11319	R9598	CASTING SIDE - LEFT
8	N/A	R9709	CASTING DOOR - RIGHT
9	N/A	R9708	CASTING DOOR - LEFT
10	24191	24191	FIREBOX SUPPORT BRACKET (2 REQUIRED)
12	R11318	R9597	CASTING LEG B
13	R11317	R9596	CASTING LEG A

CASTING PARTS VIEW

PLEASE NOTE: When ordering parts, it is very important that part number and description of part coincide.

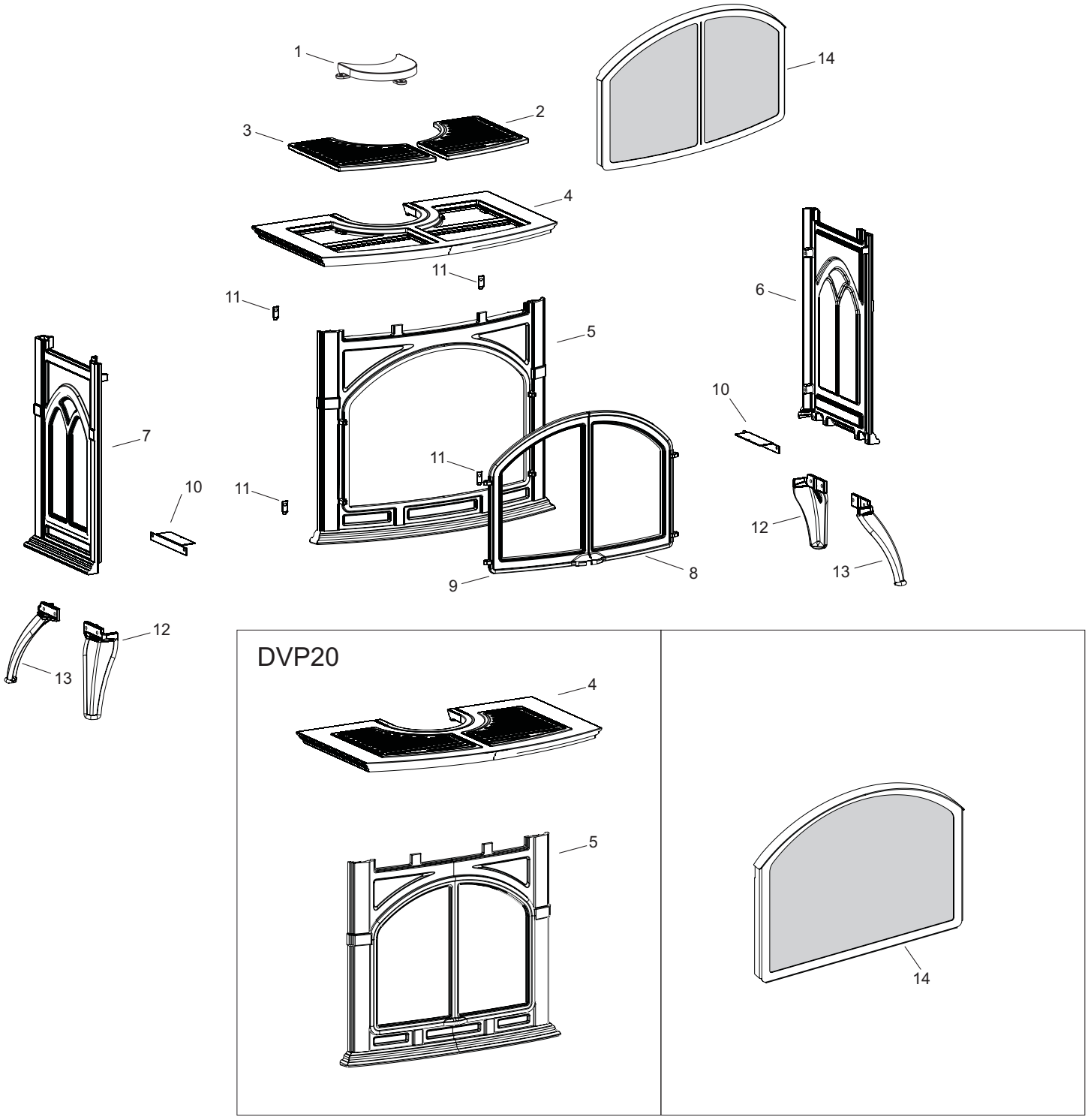

USE ONLY MANUFACTURER'S REPLACEMENT PARTS. USE OF ANY OTHER PARTS COULD CAUSE INJURY OR DEATH.

ACCESSORY SIDE SHELVES INSTALLATION INSTRUCTIONS

Installing Accessory Side Shelves:

1. Remove cast iron or stone inlay inserts from casting top and carefully set them aside.
2. Remove cast iron top from stove and place upside down on a flat, soft smooth surface to avoid damage.
3. Remove four ¼-20 hex head bolts from the outer edges of cast iron top.
4. Place left and right side shelves in place shown in Figure 34.
5. Replace four ¼-20 hex head bolts to attach side shelves to cast iron top, be sure shelf is tight to casting top before fully tightening bolts.
6. Remove eight ¼-20 hex head bolts from side shelves.
7. Replace cast iron top on unit.
8. Attach side shelf supports one at a time, using two ¼-20 hex head bolts per support, sliding support flush to casting before fully tightening bolts as shown in Figure 35.
9. Replace cast iron or stone inlay inserts into casting top.

NOTE: Be sure to remove side shelf supports prior to removing cast iron top to eliminate potential scratching or chipping to the cast iron sides.

NOTE: Due to inherent properties of the casting process, non-combustible shims may be required to level accessory side shelves to the casting top. These shims are provided in the form of washers to be used on either side of the bolts. See Figure 34. If accessory shelf angles downward, toward the floor, washer(s) will need to be added to the center side of the bolt. Conversely, if the accessory side shelf angles upward, toward the ceiling, washer(s) will need to be added to the outside of the top casting side of the bolt. See Figure 37.

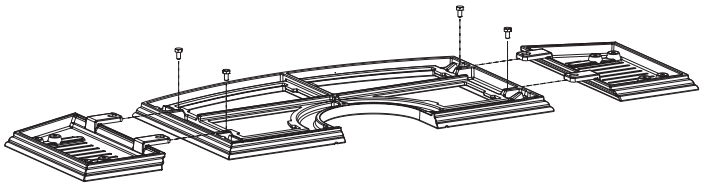

Figure 34

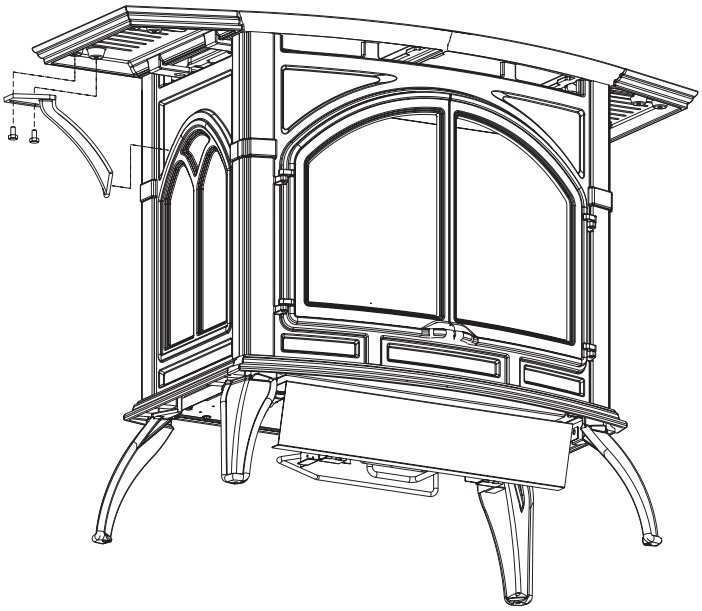

Figure 35

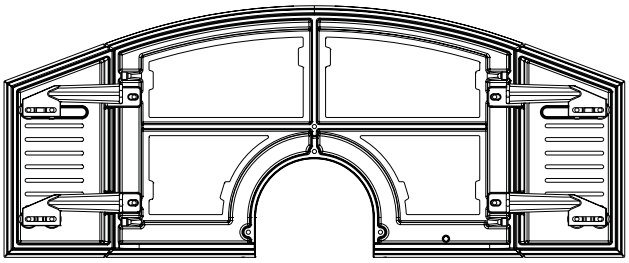

BOTTOM VIEW

Figure 36

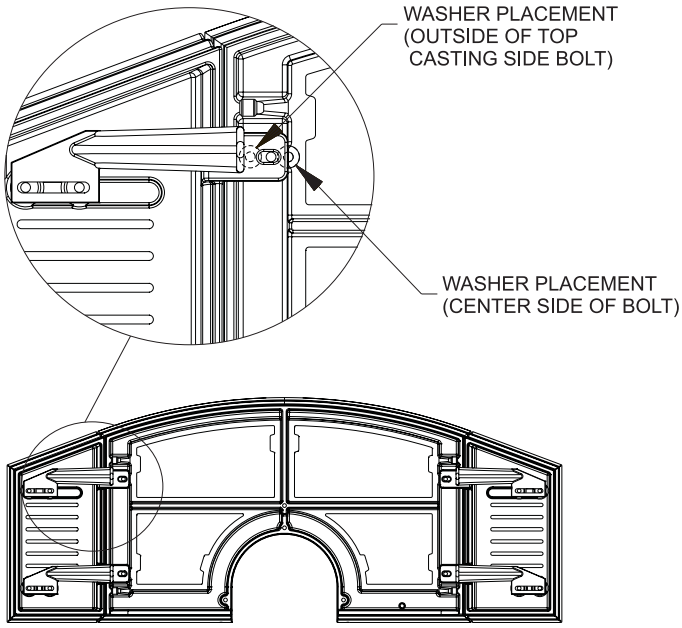

BOTTOM VIEW

Figure 37

CIB3-1 OPTIONAL BLOWER INSTALLATION INSTRUCTIONS - DVP30CC

⚠ CAUTION

Sharp edges, use protective gloves when installing.

Carton Contents

Blower Assembly
Auto/On/Off Switch
Fan Control Bracket Assembly
Wire Channel - Left DV
Wire Channel - Left VF
Hardware Package
- (2) 10 x 1/2” Screw
- (1) On/Off/Auto Switch
- (1) Rheostat Nut
- (1) Knob, Rheostat

Hardware Package

#10 x 1/2” SCREW

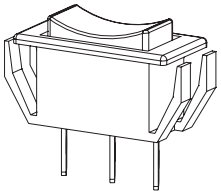

AUTO/ON/OFF SWITCH

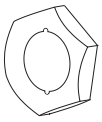

NUT

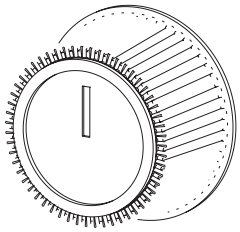

KNOB

Installing Optional CIB3 Blower

1. Loosen, but do not remove, four hex-head screws located on the exterior, bottom of the appliance.
2. Position the blower assembly at the rear of the appliance. The blower assembly has four keyholes for attachment to the exterior, bottom of the appliance.
3. Place the large diameter holes in the keyholes over and behind the four hex-head screws that were loosened in Step 1. Push inward on the blower assembly to lock the keyholes into position behind the screws. Tighten four hex-head screws to secure blower assembly to exterior, bottom of the appliance.
4. Remove wire channel-left from appliance by removing 10 x 1/2" screws on left side of the appliance. **Note:** Some units require a new wire channel. If Rheostat mounting holes are missing from part removed from unit, discard wire channel removed from unit and continue installation with appropriate wire channel shipped with blower. See Figure 38.
5. Route fan control wires through rectangular notch on wire channel - left.
6. Attach 1/4" push-on terminal from blue wire on the fan control to the AUTO (top) tab on the switch.
7. Attach 1/4" push-on terminal from black wire to the OFF (middle) tab on the switch.
8. Attach 1/4" push-on terminal from white wire on the fan control to the ON (bottom) tab on the switch.
9. Insert AUTO/OFF/ON switch into rectangular notch on wire channel - left.
10. Install rheostat through hole in wire channel and align small tab with small hole.
11. Use an 11/16” wrench to tighten rheostat nut on stationary portion of knob stem of the rheostat. **Note**: Nut is self-tapping and can be started at an angle.
12. Push rheostat knob onto knob stem until fully seated.
13. Bend the fan control tab, located on the left side of the back of the unit, inward toward the unit. Be sure tab is bent at least 90 degrees to allow fan control bracket to slide into slot.
14. Attach fan control with bracket onto rear cover with two 10 x 1/2" screws provided in hardware package.
15. Route wires from fan control and ON/OFF/REMOTE switch within wire channel.
16. Attach wire channel to channel divider with two 10 x 1/2" screws from Step 4.
17. Installation of optional CIB3 blower is completed.

Fan Control

The fan control is a non-adjustable automatic type The fan control will require between 5 and 10 minutes of main burner operation before the fan control "closes" and activates the blower. The blower will continue to run between 5 and 10 minutes after the main burner shuts off, before the fan control "opens" and deactivates the blower.

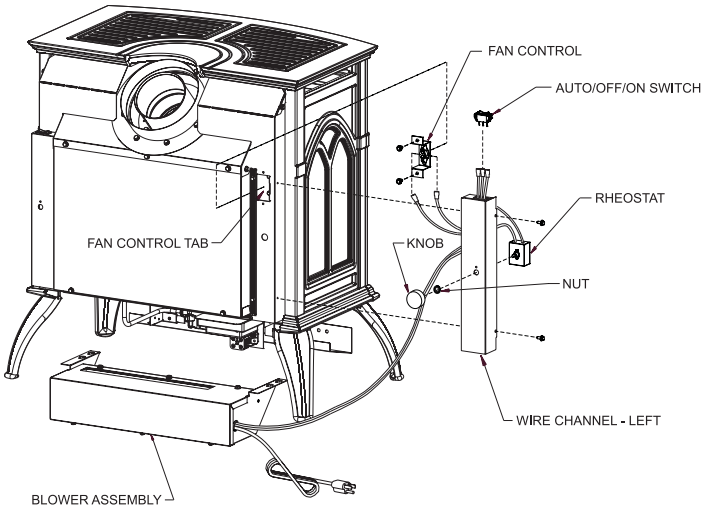

Figure 38

Cleaning

The blower wheel will collect lint and could require cleaning once a year. If the air output decreases or the noise level increases, it indicates a dirty wheel.

Blower Motor

The blower motor does not have oiling holes. Do not attempt to oil blower motor.

Wiring

The appliance, when installed, must be electrically grounded in accordance with local codes or, in the absence of local codes, with the *National Electrical Code, ANSI/NFPA 70 or Canadian Electrical Code, CSA C22.1*, if an external electrical source is utilized. **This appliance is equipped with a three-prong [grounding] plug for your protection against shock hazard and should be plugged directly into a properly grounded three-prong receptacle. Do not cut or remove the grounding prong from this plug.** For an ungrounded receptacle, an adapter, which has two prongs and a wire for grounding, can be purchased, plugged into the ungrounded receptacle and its wire connected to the receptacle mounting screws. With this wire completing the ground, the appliance cord plug can be plugged into the adapter and be electrically grounded.

⚠ CAUTION

Label all wires prior to disconnection when servicing controls. Wiring errors can cause improper and dangerous operation. Verify proper operation after servicing.

⚠ WARNING

Unplugging of blower accessory will not stop the heater from cycling. To shut heater off: Turn temperature dial or thermostat to lowest setting. Turn knob on gas control to "OFF," depressing slightly. Do not force.

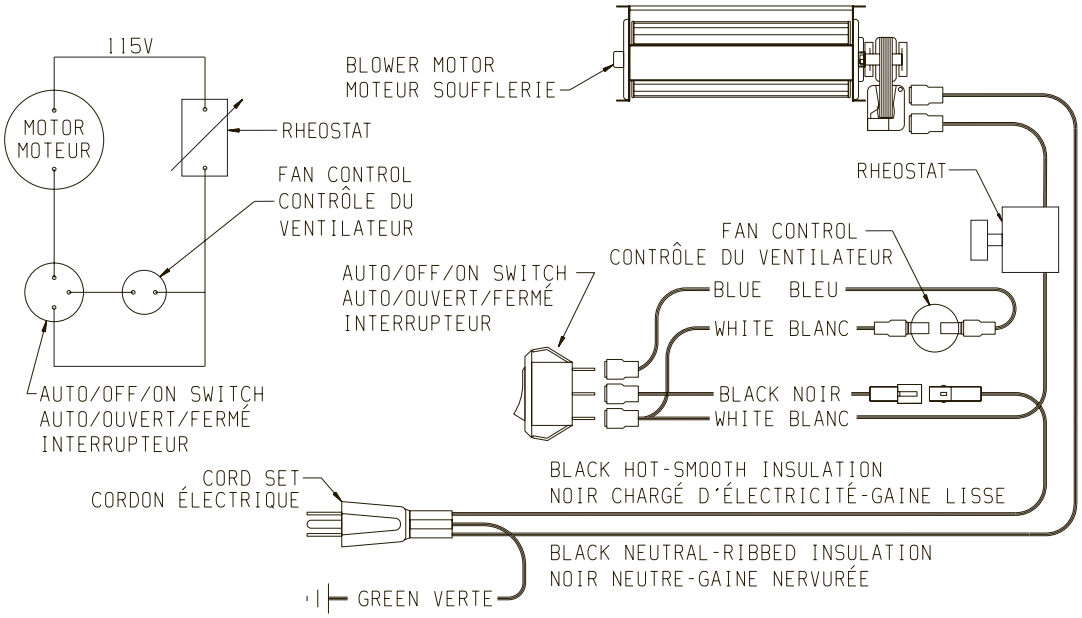

Figure 39

CIB3-1 OPTIONAL BLOWER INSTALLATION INSTRUCTIONS - DVP30CC

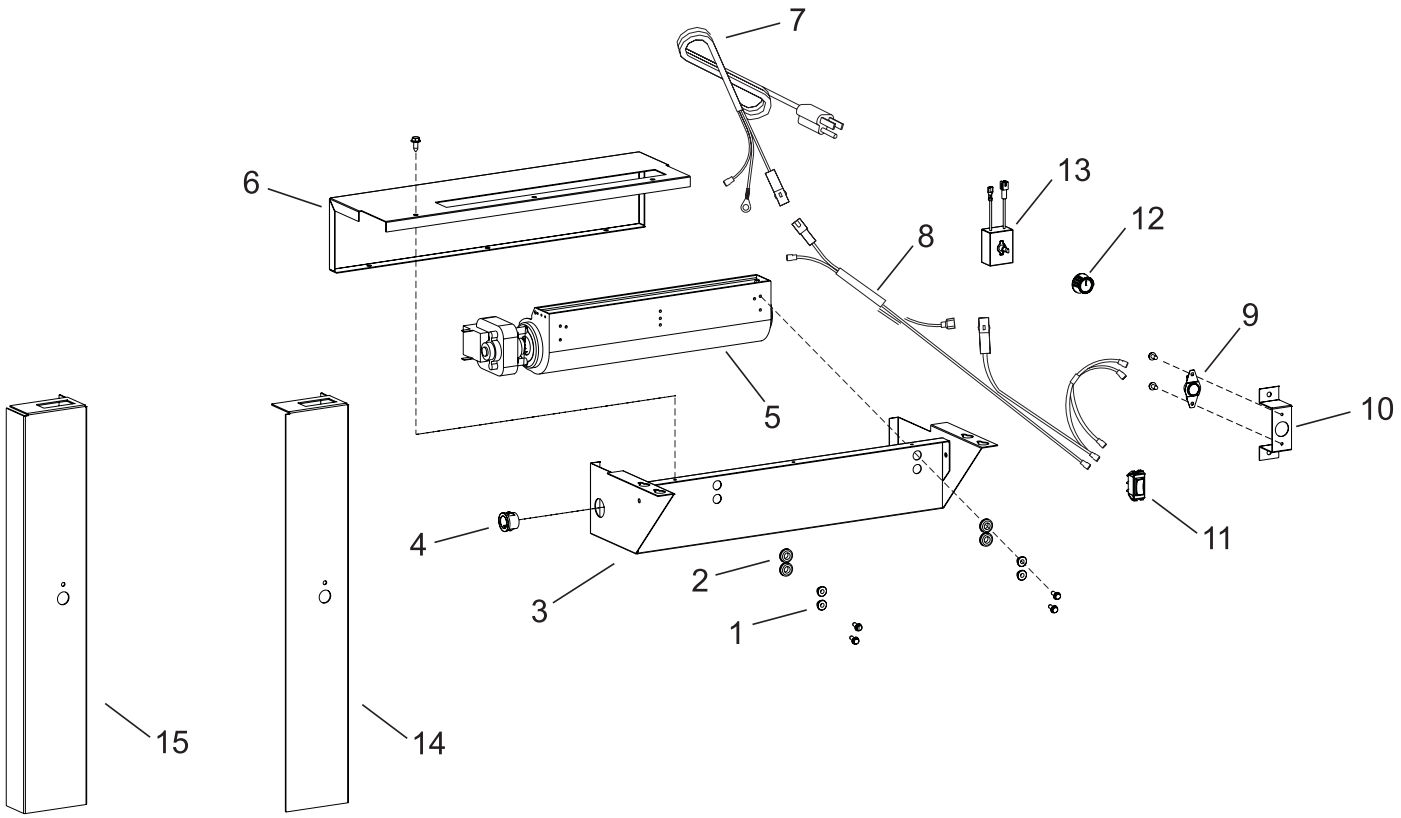

PARTS LIST		
INDEX NUMBER	**PART NUMBER**	**DESCRIPTION**
1	R1454	BRASS BUSHING
2	R1499	RUBBER GROMMET
3	31739	BLOWER HOUSING
4	R1410	STRAIN RELIEF BUSHING
5	R9927	BLOWER ASSEMBLY
6	24225	BLOWER COVER
7	R6159	CORD SET
8	R10363	WIRE HARNESS
9	R2503	FAN CONTROL
10	24222	FAN CONTROL BRACKET
11	R2805	AUTO OFF/ON SWITCH
12	R4192	RHEOSTAT KNOB
13	18879	RHEOSTAT
14	26050	WIRE CHANNEL - LEFT, DV
15	26052	WIRE CHANNEL - LEFT, VF

CIB4-1 OPTIONAL BLOWER INSTALLATION INSTRUCTIONS - DVP20CC

⚠ CAUTION

Sharp edges, use protective gloves when installing.

Carton Contents

Blower Assembly
Auto/On/Off Switch
Fan Control Bracket Assembly
Hardware Package
(2) 10 x 1/2” Screw
(1) On/Off/Auto Switch

Hardware Package

#10 x 1/2” SCREW

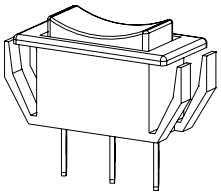

AUTO/ON/OFF SWITCH

Installing Optional CIB4 Blower

1. Loosen, but do not remove, four hex-head screws located on the exterior, bottom of the appliance.
2. Position the blower assembly at the rear of the appliance. The blower assembly has four keyholes for attachment to the exterior, bottom of the appliance.
3. Place the large diameter holes in the keyholes over and behind the four hex-head screws that were loosened in Step 1. Push inward on the blower assembly to lock the keyholes into position behind the screws. Tighten four hex-head screws to secure blower assembly to exterior, bottom of the appliance.
4. Remove wire channel-left from appliance by removing two 10 x 1/2" screws on left side of the appliance.
5. Route fan control wires through rectangular notch on wire channel - left.
6. Attach 1/4" push-on terminal from blue wire on the fan control to the AUTO (top) tab on the switch.
7. Attach 1/4" push-on terminal from black wire to the OFF (middle) tab on the switch.
8. Attach 1/4" push-on terminal from white wire on the fan control to the ON (bottom) tab on the switch.
9. Insert AUTO/OFF/ON switch into rectangular notch on wire channel - left.
10. Bend the fan control tab, located on the left side of the back of the unit, inward toward the unit. See Figure 40. Be sure tab is bent at least 90 degrees to allow fan control bracket to slide into slot.
11. Attach fan control with bracket onto rear cover with two 10 x 1/2" screws provided in hardware package.
12. Route wires from fan control and ON/OFF/REMOTE switch within wire channel.
13. Attach wire channel with two 10 x 1/2" screws from Step 4.
14. Installation of optional CIB4 blower is completed.

Fan Control

The fan control is a non-adjustable automatic type The fan control will require between 5 and 10 minutes of main burner operation before the fan control "closes" and activates the blower. The blower will continue to run between 5 and 10 minutes after the main burner shuts off, before the fan control "opens" and deactivates the blower.

Cleaning

The blower wheel will collect lint and could require cleaning once a year. If the air output decreases or the noise level increases, it indicates a dirty wheel.

Blower Motor

The blower motor does not have oiling holes. Do not attempt to oil blower motor.

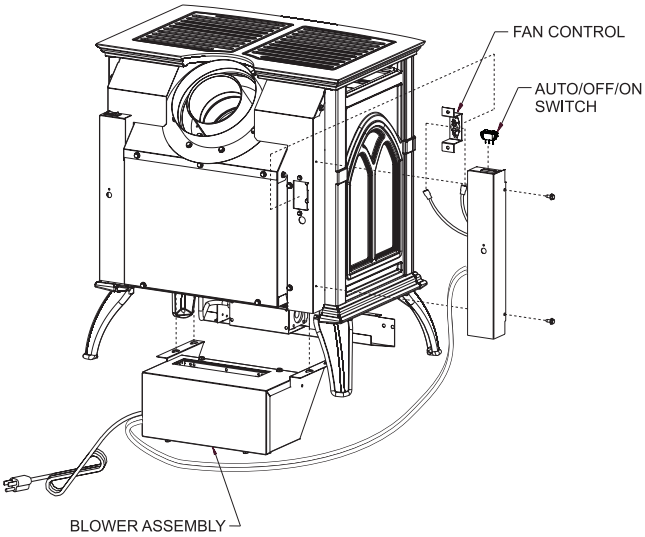

Figure 40

CIB4-1 OPTIONAL BLOWER INSTALLATION INSTRUCTIONS - DVP20CC

Wiring

The appliance, when installed, must be electrically grounded in accordance with local codes or, in the absence of local codes, with the *National Electrical Code, ANSI/NFPA 70 or Canadian Electrical Code, CSA C22.1*, if an external electrical source is utilized. **This appliance is equipped with a three-prong [grounding] plug for your protection against shock hazard and should be plugged directly into a properly grounded three-prong receptacle. Do not cut or remove the grounding prong from this plug.** For an ungrounded receptacle, an adapter, which has two prongs and a wire for grounding, can be purchased, plugged into the ungrounded receptacle and its wire connected to the receptacle mounting screws. With this wire completing the ground, the appliance cord plug can be plugged into the adapter and be electrically grounded.

⚠ CAUTION

Label all wires prior to disconnection when servicing controls. Wiring errors can cause improper and dangerous operation. Verify proper operation after servicing.

⚠ WARNING

Unplugging of blower accessory will not stop the heater from cycling. To shut heater off: Turn temperature dial or thermostat to lowest setting. Turn knob on gas control to "OFF," depressing slightly. Do not force.

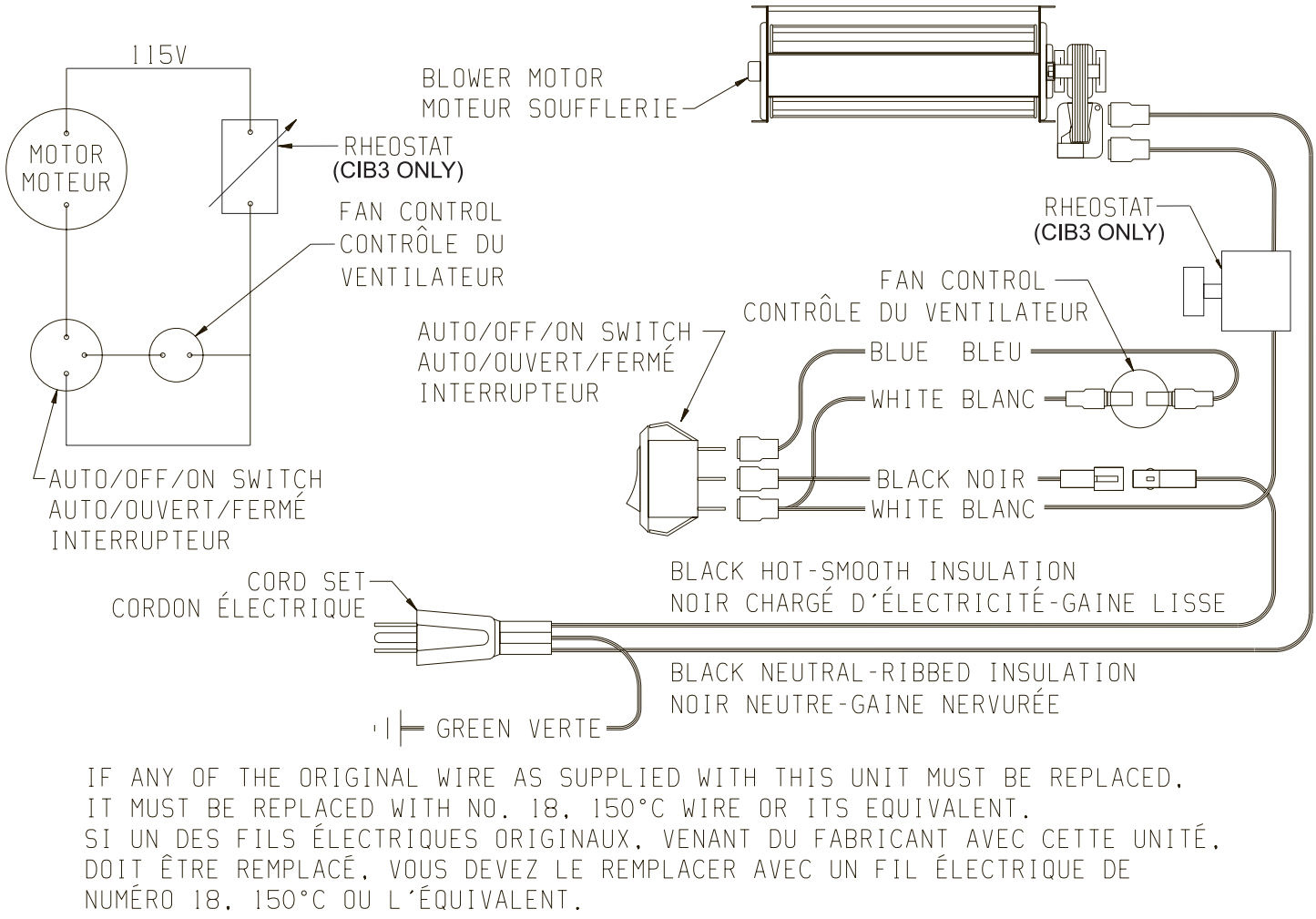

IF ANY OF THE ORIGINAL WIRE AS SUPPLIED WITH THIS UNIT MUST BE REPLACED, IT MUST BE REPLACED WITH NO. 18, 150°C WIRE OR ITS EQUIVALENT.
SI UN DES FILS ÉLECTRIQUES ORIGINAUX, VENANT DU FABRICANT AVEC CETTE UNITÉ, DOIT ÊTRE REMPLACÉ, VOUS DEVEZ LE REMPLACER AVEC UN FIL ÉLECTRIQUE DE NUMÉRO 18, 150°C OU L'ÉQUIVALENT.

Figure 41

CIB4-1 OPTIONAL BLOWER INSTALLATION INSTRUCTIONS - DVP20CC

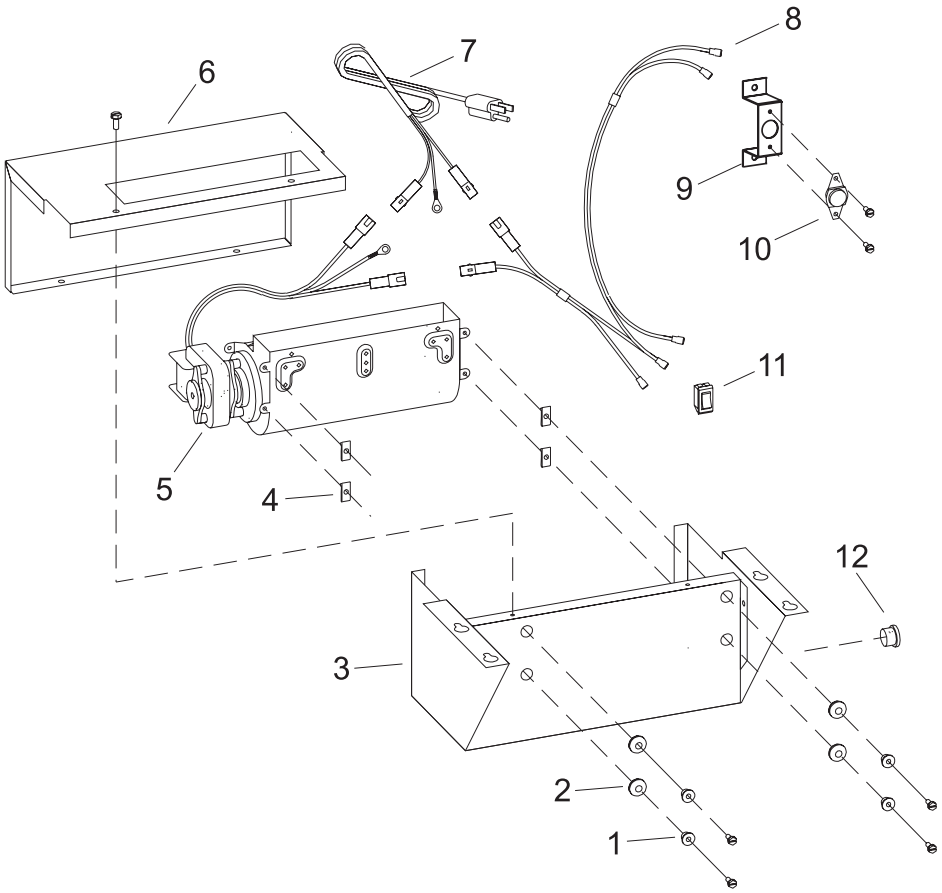

PARTS LIST		
INDEX NUMBER	**PART NUMBER**	**DESCRIPTION**
1	R1454	Brass Bushing (4 Required)
2	R1499	Rubber Grommet (4 Required)
3	CI002	Blower Housing
4	R1517	Tinnerman Clip (4 Required)
5	R2804A	Blower Assembly
6	CI003	Blower Housing Cover
7	R2099	Cord Set
8	R3767A	Wire Harness
9	24222	Fan Control Bracket
10	R2503	Fan Control
11	R2805	Auto/Off/On Switch
12	R1410	Bushing 7/8” Diameter

WARRANTY

Empire Comfort Systems Inc. warranties this hearth product to be free from defects at the time of purchase and for the periods specified below. Hearth products must be installed by a qualified technician and must be maintained and operated safely, in accordance with the instructions in the owner's manual. This warranty applies to the original purchaser only and is not transferable. All warranty repairs must be accomplished by a qualified gas appliance technician.

Limited Lifetime Parts Warranty – Combustion Chamber, Heat Exchanger, and Factory-Installed Glass

If the combustion chamber, heat exchanger (see parts list) or factory-installed glass fails because of defective workmanship or material, Empire will repair or replace at Empire's option.

Limited Three-Year Parts Warranty – All Other Components

(Except Remote Controls, Thermostats, Accessories and Replacement Parts)

Should any part fail because of defective workmanship or material within three years from the date of purchase, Empire will repair or replace at Empire's option..

Limited One-Year Parts Warranty – Remote Controls, Thermostats, Accessories, and Parts

Should any remote control, thermostat, accessory, or other part fail because of defective workmanship within one year from the date of purchase, Empire will repair or replace at Empire's option.

Duties Of The Owner

The appliance must be installed by a qualified installer and operated in accordance with the instructions furnished with the appliance. A bill of sale, cancelled check, or payment record should be kept to verify purchase date and establish warranty period. Ready access to the appliance for service.

What Is Not Covered

Damages that might result from the use, misuse, or improper installation of this appliance.
Travel, diagnostic costs and freight charges on warranted parts to and from the factory.
Claims that do not involve defective workmanship or materials.
Unauthorized service or parts replacements.
Removal and reinstallation cost.
Inoperable due to improper or lack of maintenance.

How To Get Service

To make a claim under this warranty, please have your receipt available and contact your installing dealer. Provide the dealer with the model number, serial number, type of gas, and purchase verification. The installing dealer is responsible for providing service and will contact the factory to initiate any warranted parts replacements. Empire will make replacement parts available at the factory. Shipping expenses are not covered. If, after contacting your Empire dealer, service received has not been satisfactory, contact: Consumer Relation Department, Empire Comfort Systems Inc., PO Box 529, Belleville, Illinois 62222, or send an e-mail to info@empirecomfort.com with "Consumer Relations" in the subject line.

Your Rights Under State Law

This warranty gives you specific legal rights, and you may also have other rights, which vary from state to state.

EMPIRE
COMFORT SYSTEMS

Empire Comfort Systems Inc.
Belleville, Illinois

If you have a general question about our products, please e-mail us at info@empirecomfort.com.

If you have a service or repair question, please contact your dealer.

www.empirecomfort.com

EMPIRE
Cast Iron Stoves

Empire Comfort Systems
Belleville, Illinois

Web Site:
www.empirecomfort.com

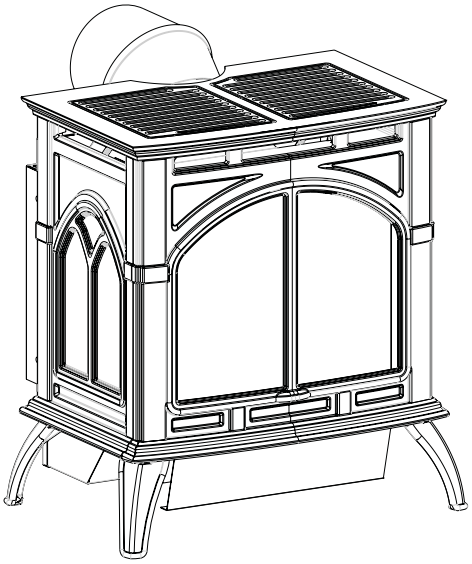

GAS-FIRED
C UL US
LISTED

The Empire Cast Iron Stoves Models:

DVP20CC(30,70)(B,F,M)(N,P)-1

DVP30CC(30,70)(B,F,M,S,W)(N,P)-1

Model	**DVP20CC**		**DVP30CC**	
Gas Type	Natural Gas	LP	Natural Gas	LP
Input BTU/HR (KW/H) Max	19,500		26,500	26,500
Input BTU/HR (KW/H) Min	13,500		18,000	21,000
Gas Inlet (Pipe)	3/8"		3/8"	
Orifice	2.15mm	55	39	1.55mm
Gas Supply Pressure Max	10.5" W.C. / 2.614 kPa	13.0" W.C. / 3.237 kPa	10.5" W.C. / 2.614 kPa	13.0" W.C. / 3.237 kPa
Gas Supply Pressure Min	4.5" W.C. / 1.121 kPa	11.0" W.C. / 2.739 kPa	4.5" W.C. / 1.121 kPa	11.0" W.C. / 2.739 kPa
Gas Supply Pressure Manifold	3.5" W.C. / .872 kPa	10.0" W.C. / 2.490 kPa	3.5" W.C. / .872 kPa	10.0" W.C. / 2.490 kPa
Height	24-1/8"		27-3/4"	
Width	21-1/2"		28-1/16"	
Depth	16-1/2"		18"	

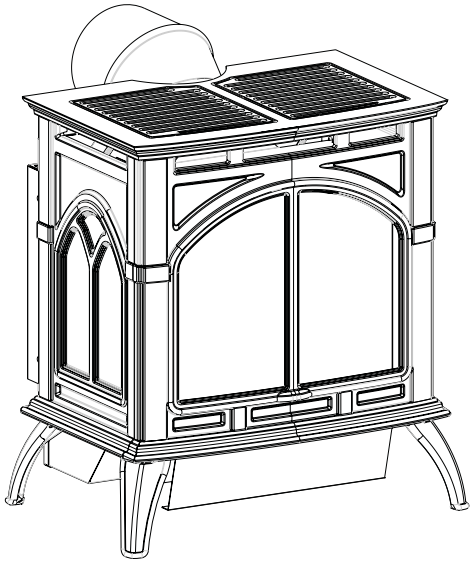

The Empire Cast Iron Stoves Models:

GAS-FIRED
C UL US
LISTED

DVP20CC(30,70)(B,F,M)(N,P)-1

DVP30CC(30,70)(B,F,M,S,W)(N,P)-1

CLEARANCES

In selecting a location for installation, it is necessary to provide adequate accessibility clearances for servicing and proper operation.

Locating and Venting the Direct Vent Stove

Clearances: When facing the front of the direct vent stove the minimum clearances to combustible construction (material) are the following:

Top of appliance (ceiling)	36 (inches)	Heater Corners (45° angle) to Wall	4 (inches)
Rear Wall	1 (inches)	Floor	0 (inches)
Side Wall	6 (inches)		

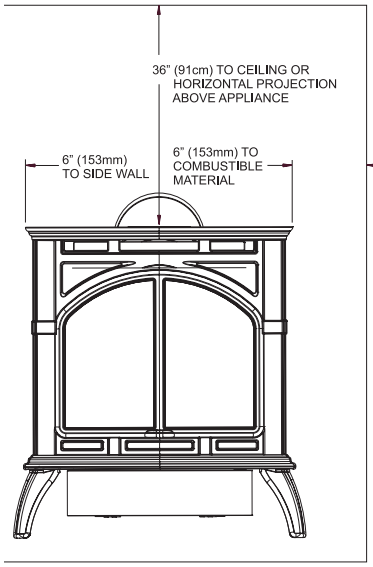

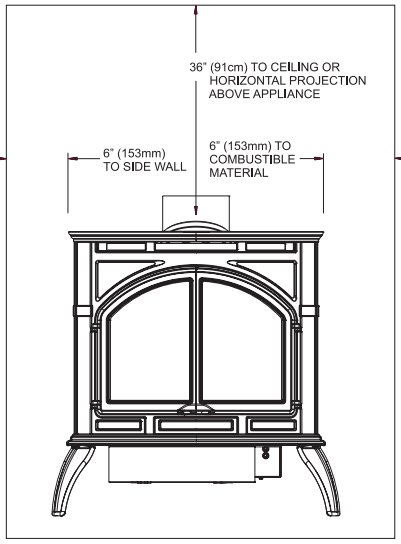

Installation on Rugs and Tile

This appliance must be installed on a flat, solid, continuous surface (e.g. wood, metal, concrete). This may be the floor, or it may be raised up on a platform to enhance its visual impact. The appliance may be installed on carpeting, tile, wood flooring or other combustible material as the appliance's base extends the width and depth of the appliance.

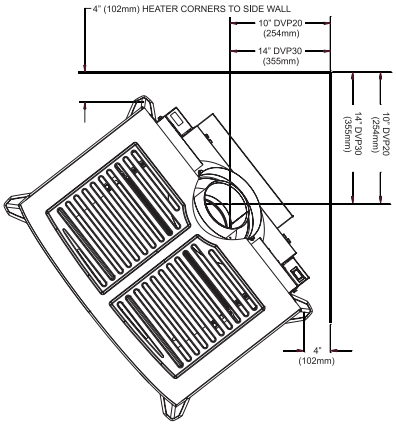
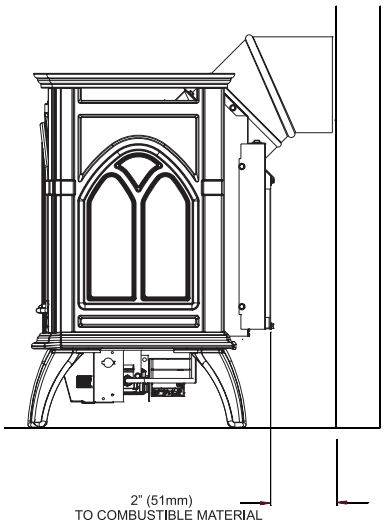
NOTE: HEATER INSTALLED AT 45° ANGLE IN CORNER