This Owner's Manual is provided and hosted by Appliance Factory Parts.

Appliance Factory Parts
Experts in BBQ, Humidifier, & Appliance Parts
1-800-955-7075

White Mountain Hearth OP42FP72MP-3 Owner's Manual

Shop genuine replacement parts for White Mountain Hearth OP42FP72MP-3

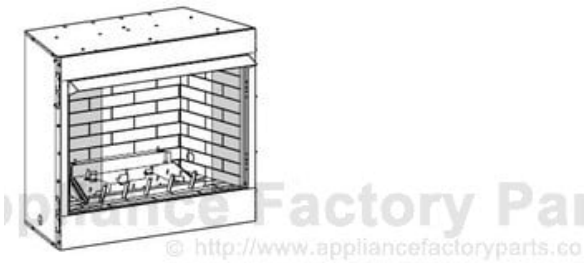

Find Your White Mountain Hearth Fireplace Parts - Select From 539 Models

-------- Manual continues below --------

EMPIRE
COMFORT SYSTEMS
SINCE 1932

INSTALLATION INSTRUCTIONS AND OWNER'S MANUAL

INSTALLER: Leave this manual with the appliance.
CONSUMER: Retain this manual for future reference.

⚠ WARNING

For Outdoor Use Only.

⚠ DANGER

If you smell gas:
1. **Shut off gas to the appliance.**
2. **Extinguish any open flame.**
3. **If odor continues, keep away from the appliance and immediately call your gas supplier or fire department.**

⚠ WARNING

Improper installation, adjustment, alteration, service or maintenance can cause injury or property damage. Read the installation, operation and maintenance instructions thoroughly before installing or servicing this equipment.

⚠ WARNING

Do not store or use gasoline or other flammable vapors and liquids in the vicinity of this or any other appliance.

An LP-cylinder not connected for use shall not be stored in the vicinity of this or any other appliance.

OUTDOOR GAS FIREPLACE

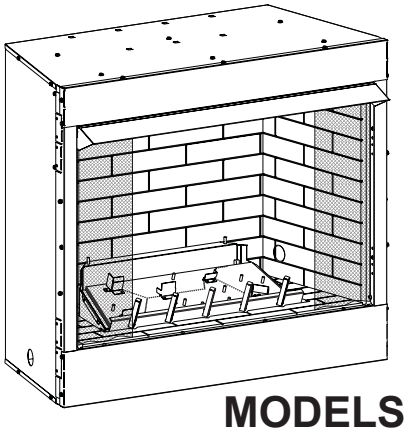

GAS-FIRED
C UL US
LISTED
File No: MH 48188

MODELS

OP36FP32M(N,P)-3
OP42FP32M(N,P)-3

OP36FP72M(N,P)-3
OP42FP72M(N,P)-3

This series is design certified in accordance with American National Standard Z21.97 as an Outdoor Ventless Fireplace and should be installed according to these instructions.

NATIONAL FIREPLACE INSTITUTE
NFI
CERTIFIED
www.nficertified.org

We suggest that our gas hearth products be installed and serviced by professionals who are certified in the U.S. by the National Fireplace Institute® (NFI) as NFI Gas Specialists.

⚠ DANGER

CARBON MONOXIDE HAZARD

This appliance can produce carbon monoxide which has no odor.

Using it in an enclosed space can kill you.

Never use this appliance in an enclosed space such as a camper, tent, car or home.

TABLE OF CONTENTS

SECTION	PAGE
Before Your Start	3
Carton Contents & Hardware Package	3
Important Tips to Keep a Good Flame	4
Product Specifications	5
Accessories	5
Important Safety Information	6
Safety Information for Users of LP-Gas	7
Homeowner Reference Information	8
Introduction	8 - 9
Fireplace Dimensions	10
Gas Supply	11
Clearances	12 - 13
Planning Installation	14
Fireplace Installation Instructions	15 - 16
Gas Line Connections	16
Millivolt Lighting Instructions - OP(36,42)FP3	17
IP Lighting Instructions - OP(36,42)FP7	18
Millivolt Pilot and Main Burner Flame Characteristics - OP(36,42)FP3	19
Wiring	20
IP Remote Control Installation & Operation - OP(36,42)FP7	21
Cleaning and Service	22
Troubleshooting	23
Parts View	24
Parts List	24 - 25
Master Parts Distributor List	26
How to Order Repair Parts	26
Warranty Terms	27

BEFORE YOU START

Sample Warnings and Definitions:

⚠ DANGER

Indicates a hazardous situation which, if not avoided, will result in death or serious injury.

⚠ WARNING

Indicates a hazardous situation which, if not avoided, could result in death or serious injury.

⚠ CAUTION

Indicates a hazardous situation which, if not avoided, could result in minor or moderate injury.

NOTICE: Indicates information considered important but not hazard related.

⚠ WARNING

If the these instructions are not followed exactly, a fire or explosion may result causing property damage, personal injury or loss of life.

⚠ WARNING

If not installed, operated and maintained in accordance with the manufacturer's instructions, this product could expose you to substances in fuel or from fuel combustion which can cause death or serious illness.

1. Read the safety information on Pages 6 - 7.
2. Determine where to install fireplace. See page 14.
3. What accessories are going to be installed? See page 5.
4. Frame the opening. See page 15.
5. Install shutoff valve. See page 11.
6. Install optional drain tray. Refer to the instructions provided with the drain tray.
7. Install the fireplace. See pages 15 - 16.
8. Install the gas lines. See page 11.
9. Install hood or optional extension hood and optional bifold door.
10. Light the fireplace. See pages 17 and 18.
11. If applicable, show the homeowner how to operate the remote. See page 21.
12. Show the homeowner how to do basic maintenance. See page 22.

CARTON CONTENTS & HARDWARE PACKAGE

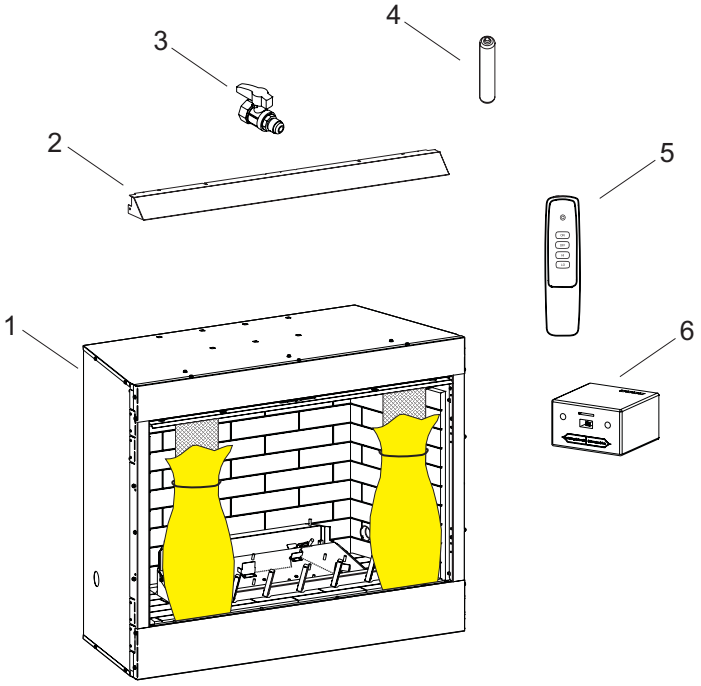

Index No.	Description	Quantity	
		30 Series	70 Series
1	Fireplace	1	1
2	Hood	1	1
3	Shut-Off Valve	1	1
4	AA Battery	0	4
5	Remote & Battery (A23)	0	1
6	Battery Pack & Wire Assembly	0	1

Provided Hardware for hood installation.

SCREW, 10-32 X ½ TYPE F PHILLIPS PAN HEAD SS (QTY 4)

SCREW, 10-24 X ½ TYPE PHILLIPS HEX HEAD (QTY 2)

NOTICE: See parts illustration and list on pages 24 and 25 for ordering replacement parts.
NOTICE: Do not order batteries, bolts, screws, washers or nuts. These items can be purchased at hardware stores.

IMPORTANT TIPS TO KEEP A GOOD FLAME

⚠ IMPORTANT NOTICE
INSTALLER - SERVICE PERSON - HOMEOWNER

1. Ensure the air shutter is set to the specification. **See Figures 1 to 3** and table on page 5.
2. Ensure burner, venturi, and air shutter are free of dirt, lint, animal hair (i.e. cat and dog) or anything that may block air flow. See Cleaning and Service, page 22.
3. Do not allow fans to blow directly into or at the fireplace. Avoid any drafts that alter the flame patterns. Pay particular attention to ceiling fans.
4. Do not place debris, additional logs or other articles not specified in this manual inside the fireplace.
5. Do not use rock wool (embers) in fireplace.
6. Have your dealer or qualified service technician perform an annual inspection and cleaning to prevent malfunction.
7. Install logs according to the installation instructions. Do not alter log placement from the prescribed layout in manual provided with the log set.

Verify the air shutter opening is set correctly. Refer to the tables for specific air shutter settings for each model.

Natural Gas Models - Set air shutter to 1/8 inch. **See Figures 1 and 2**, and Table 1 on page 5.

Figure 1 - Air shutter at 1/8-inch opening

Verify air shutter opening with a 1/8-inch drill bit. **See Figure 2.**

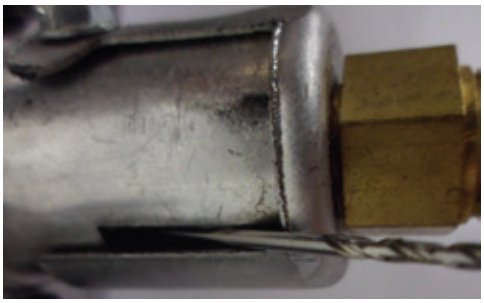

Figure 2 - 1/8 inch opening shown

LP Gas Models – Verify air shutter is "fully open." **See Figure 3** and Table 2 on page 5.

Figure 3 - Air Shutter Fully Open

PRODUCT SPECIFICATIONS

Model	Gas Type	Valve Type	Orifice	BTU/H Max	BTU/H Min
OP36FP32	LP	MILLIVOLT	#45	50,000	36,000
OP36FP32	NAT	MILLIVOLT	#29	50,000	38,000
OP42FP32	LP	MILLIVOLT	#45	50,000	36,000
OP42FP32	NAT	MILLIVOLT	#29	50,000	38,000
OP36FP72	LP	IP	#45	50,000	36,000
OP36FP72	NAT	IP	#29	50,000	38,000
OP42FP72	LP	IP	#45	50,000	36,000
OP42FP72	NAT	IP	#29	50,000	38,000

All Fireplace Sizes	Natural Gas (inches w.c.)		Propane Gas (inches w.c.)	
	MV	IP	MV	IP
Manifold pressure setting on "HI"	3.5	3.5	10.0	10.0
Gas inlet pressure Maximum	10.5	10.5	13.0	13.0
Gas inlet pressure Minimum	4.5	4.5	10.8	10.8

Table 1 - Air Shutter Opening Natural Gas Models

Model	Air Shutter Opening (inches)
OP36FP32MN	1/8
OP42FP32MN	1/8
OP36FP72MN	1/8
OP42FP72MN	1/8

Table 2 - Air Shutter Opening LP Gas Models

Model	Air Shutter Opening
OP36FP32MP	Fully Open
OP42FP32MP	Fully Open
OP36FP72MP	Fully Open
OP42FP72MP	Fully Open

ACCESSORIES

The following accessories may be obtained from your Empire Comfort Systems dealer. Contact your Empire Dealer for more accessory options. If you need additional information beyond what your dealer can furnish, contact Empire Comfort Systems Inc., 918 Freeburg Ave., Belleville, Illinois 62220-2623.

Model Number	Description
BD36SS	36-Inch Bi-fold Glass Doors
BD42SS	42-Inch Bi-fold Glass Doors
DT36SS	36-Inch Drain Tray - Stainless Steel
DT42SS	42-Inch Drain Tray - Stainless Steel
WD36SS	36-Inch Weather Door - Stainless Steel
WD42SS	42-Inch Weather Door - Stainless Steel
VB4H36SS	36-Inch Extended Hood - Stainless Steel
VB4H42SS	42-Inch Extended Hood - Stainless Steel
FRBC	Battery Remote (millivolt units only)
FWS1	Wall Switch (millivolt units only)
OLX24WR	7-Piece Log Set (Required for OP36FP models)
OLX30WR	7-Piece Log Set (Required for OP42FP models)

Gas Conversion Kits

Kit Number	Description	Model Used On
31996	Conversion Kit - NAT to LP	OP36FP32MN
31997	Conversion Kit - LP to NAT	OP36FP32MP
31998	Conversion Kit - NAT to LP	OP42FP32MN
31999	Conversion Kit - LP to NAT	OP42FP32MP
31992	Conversion Kit - NAT to LP	OP36FP72MN
31993	Conversion Kit - LP to NAT	OP36FP72MP
31994	Conversion Kit - NAT to LP	OP42FP72MN
31995	Conversion Kit - LP to NAT	OP42FP72MP

IMPORTANT SAFETY INFORMATION

FOR THE INSTALLER

- Leave these instructions with the homeowner
- Replace any guard or protective device removed for servicing prior to operating the fireplace.
- Installation and repair should be done by a qualified service person.
- Keep the control compartments, burner, and circulating air passageways of the fireplace clean.
- During manufacture, this fireplace is treated with oils, films and bonding agents. These are not harmful but may produce smoke and odor as they burn off during initial operation. This is normal.
- Any modification to this fireplace or to controls can be dangerous. Improper installation or use of the fireplace can cause serious injury or death from fire, burns, explosion or carbon monoxide poisoning.
- Follow all local codes regarding installation, combustion and ventilation air or in the absence of local codes follow the National Fuel Gas Code ANSI Z223.1 (US installation), or CAN/CGA-B149, installation Code (Canada installation).
- Use Non-Combustible Materials where indicated for the fireplace installation. Non-combustible materials do not ignite or burn as a result of using the fireplace. These include metal, brick, ceramic, concrete, slate, glass, and plaster. Adhesives must be rated for high temperatures (300°F +). Any mechanical fasteners used to install material must also be non-combustible, including wall anchors and tile spacers. Materials that pass the ASTM E 136 test (Standard Test Method for Behavior of Materials in a Vertical Tube Furnace at 750C) are considered non-combustible.

FOR THE HOMEOWNER

- This fireplace should be inspected before use and at least annually by a qualified service person. More frequent cleaning may be required due to insects, pollen build up, dust, etc.
- Make a periodic visual check of the spark probe and burners. Have a qualified service technician clean and replace damaged parts.
- Do not use this fireplace if any part has been underwater. Immediately call a qualified service technician to inspect the fireplace and to replace any part of the control system and any gas control which has been under water.
- Do not operate this fireplace with glass doors or weather door in the closed position. A firebox screen must be in place when the burner is being used.
- Alert children and adults to the hazards of high surface temperatures. Keep children and other at-risk individuals away to avoid burns or clothing ignition.
- Carefully supervise young children when they are in the same area as the fireplace.
- Do not place debris, additional logs, or other articles in the fireplace.
- Do not hang or place clothing or other flammable materials on or near the fireplace.
- Do not allow Combustible Materials adjacent to or in contact with the fireplace. Combustible materials include wood, or other materials that will burn even when treated with fire-retardant chemicals.
- Keep fireplace area clear and free from combustible materials, gasoline and other flammable vapors and liquids.
- Do not allow fans (ceiling fans, box fans, etc) to blow directly into or at the fireplace.

SAFETY INFORMATION FOR USERS OF LP-GAS

Propane (LP-Gas) is a flammable gas which can cause fires and explosions. In its natural state, propane is odorless and colorless. You may not know all the following safety precautions which can protect both you and your family from an accident. Read them carefully now, then review them point by point with the members of your household. Someday when there may not be a minute to lose, everyone's safety will depend on knowing exactly what to do. If, after reading the following information, you feel you still need more information, please contact your gas supplier.

LP-GAS WARNING ODOR

If a gas leak happens, you should be able to smell the gas because of the odorant put in the LP-Gas.
That's your signal to go into immediate action!

- Do not operate electric switches, light matches, or use your phone. Do not do anything that could ignite the gas.
- Immediately get everyone out of the area.
- Close all gas tank or cylinder supply valves.
- LP-Gas is heavier than air and may settle in low areas such as basements. When you have reason to suspect a gas leak, keep out of basements and other low areas. Stay out until firefighters declare them to be safe.
- Use your neighbor's phone and call a trained LP-Gas service person and the fire department. Even though you may not continue to smell gas, do not turn on the gas again. Do not re-enter the area.
- **Finally,** let the service man and firefighters check for escaped gas. Have them air out the area before you return. Properly trained LP-Gas service people should repair the leak, then check and relight the gas appliance for you.

NO ODOR DETECTED - ODOR FADE

Some people cannot smell well. Some people cannot smell the odor of the chemical put into the gas. You must find out if you can smell the odorant in propane. Smoking can decrease your ability to smell. Being around an odor for a time can affect your sensitivity or ability to detect that odor. Sometimes other odors in the area mask the gas odor. People may not smell the gas odor or their minds are on something else. Thinking about smelling a gas odor can make it easier to smell.

The odorant in LP-gas is colorless, and the odor can fade under some circumstances. For example, if there is an underground leak, the movement of the gas through soil can filter the odorant. Odorants in LP-Gas also are subject to oxidation. This fading can occur if there is rust inside the storage tank or in iron gas pipes.

The odorant in escaped gas can adsorb or absorb onto or into walls, masonry and other materials and fabrics in a room. That will take some of the odorant out of the gas, reducing its odor intensity.

LP-Gas may condense in a closed area, and the odor intensity could vary at different levels. Since it is heavier than air, there may be more odor at lower levels. Always be sensitive to the slightest gas odor. If you detect any odor, treat it as a serious leak. Immediately go into action as instructed earlier.

SOME POINTS TO REMEMBER

- Learn to recognize the odor of LP-gas. Your local LP-Gas Dealer can give you a "Scratch and Sniff" pamphlet. Use it to find out what the propane odor smells like. If you suspect that your LP-Gas has a weak or abnormal odor, call your LP-Gas Dealer.
- If you are not qualified, do not perform service, or make adjustments to appliances on the LP-Gas system. If you are qualified, consciously think about the odor of LP-Gas prior to and while lighting burner or performing service or making adjustments.
- Do not try to light the burner, perform service, or make adjustments in an area where the conditions are such that you may not detect the odor if there has been a leak of LP-Gas.
- Odor fade, due to oxidation by rust or adsorption on walls of new cylinders and tanks, is possible. Therefore, people should be particularly alert and careful when new tanks or cylinders are placed in service. Odor fade can occur in new tanks, or reinstalled old tanks, if they are filled and allowed to set too long before refilling. Cylinders and tanks which have been out of service for a time may develop internal rust which will cause odor fade. If such conditions are suspected to exist, a periodic sniff test of the gas is advisable. **If you have any question about the gas odor, call your LP-Gas dealer. A periodic sniff test of the LP-gas is a good safety measure under any condition.**
- If, at any time, you do not smell the LP-Gas odorant and you think you should, assume you have a leak. Take the same immediate action recommended for the occasion when you do detect the odorized LP-Gas.
- If you experience a complete "gas out," (the container is under no vapor pressure), turn the tank valve off immediately. If the container valve is left on, the container may draw in some air through openings. If this occurs, some new internal rusting could occur. If the valve is left open, then treat the container as a new tank. Always be sure your container is under vapor pressure by turning it off at the container before it goes completely empty or having it refilled before it is completely empty.

HOMEOWNER REFERENCE INFORMATION

We recommend that you record the following information about your fireplace.

Model Number: _____ Date purchased: _____

Serial Number: _____ Location of fireplace: _____

Dealer Name: _____ Dealer Phone: _____

Notes: _____

INTRODUCTION

Instructions to Installer

1. Leave instruction manual with owner.
2. Show homeowner the Product Registration Card supplied with fireplace.
3. Fill in the Homeowner Reference Information above.
4. Show owner how to start and operate outdoor fireplace.

Consult your local Building Department regarding regulations, codes or ordinances which apply to the installation of an outdoor fireplace.

⚠ WARNING

Any change to this fireplace or its controls can be dangerous. Improper installation or use of the appliance can cause serious injury or death from fire, burns, explosion or carbon monoxide poisoning.

Cleaning Instructions at Installation

This appliance is built using mostly high-grade stainless steel to resist rust-through. In outdoor applications, all stainless steel will develop a dull patina and, depending on the local environment and on the materials used in the installation, may develop some surface oxidation (rust). This does not affect the performance of the fireplace, and does not require any action to correct. If you prefer keeping your fireplace front looking factory-fresh, clean it as required with stainless steel cleaner.

When installation application includes highly acidic materials such as acid wash or stone etching, do not remove the protective PVC film from the stainless steel until after this application is complete. Once the film has been removed, clean appliance immediately with a stainless steel cleaner.

Please note that areas where the film has been formed (corners, hems, etc.) may require extra cleaning to remove film residue. Ensure that all protective film has been removed from the fireplace prior to burning.

Important

- Before contacting your dealer or Empire regarding this fireplace, please complete the Homeowner Reference Information above.
- Do not burn solid fuels in this appliance.
- The maximum gas inlet supply pressure is 13 inches for LP and 10.5 inches for NAT.
- If a fireplace is equipped with a gas pressure regulator connect to a fixed fuel piping system:
  - The required manifold pressure in inches water column (w.c.) is 10 inches for LP and 3.5 inches for NAT when on "HI".
  - Disconnect the fireplace and its shutoff valve from the gas supply piping system during any pressure testing in excess of 1/2 psi (3.5 kPa).
  - Close the shutoff valve to isolate the fireplace from the gas supply during any pressure test equal to or less than 1/2 psi (3.4 kPa).

Moisture Control

- This outdoor fireplace will shed moderate amounts of water, but is not waterproof. Water and condensing water vapor may enter the chase under certain conditions.
- The fireplace will not perform as an exterior wall. Moisture penetration must be considered for construction that places the fireplace in structure walls or on moisture sensitive surfaces.
- **When installed on exterior walls:** Construct the fireplace chase outside the structure's weather envelope. Where the platform meets the wall, use a flashing detail similar to that required for attached decks. Chase platforms, including hearths should slope away from the structure at 1/4 inch per foot. The fireplace can be shimmed level.
- **When installed on surfaces where water may collect or cause damage:** It is recommended a slope of 1/4 inch per foot towards the drain port. The fireplace can be shimmed level.
- Hearths should slope away from the front of the fireplace and chase at 1/4 inch per foot.
- We recommend a weather door or bifold door accessory to protect the fireplace from moisture. Never install the fireplace where moisture cannot drain off easily.

Screened Porch Installation
The fireplace may be installed safely and is design certified by UL to be installed in a screened porch with the following guidelines.

Minimum Porch Area	96 sq ft
Minimum Ceiling Height	84 inches

See page 14 - Planning Installation

Installation on Rugs and Tile
If this fireplace is installed directly on carpeting, tile or other combustible material (other than wood flooring or decking), the fireplace shall be installed on a metal or wood panel extending the full width and depth of the appliance.

Qualified Installing Agency
Installation and replacement of gas piping, gas utilization equipment or accessories and repair and servicing of equipment shall be performed only by a qualified agency. The term "qualified agency" means any individual, firm, corporation or company which either in person or through a representative is engaged in and is responsible for (a) the installation or replacement of gas piping or (b) the connection, installation, repair or servicing of equipment, who is experienced in such work, familiar with all precautions required and has complied with all the requirements of the authority having jurisdiction.

Commonwealth of Massachusetts: The installation must be made by a licensed plumber or gas fitter in the Commonwealth of Massachusetts.

High Altitudes
For altitudes above 2,000 feet, ratings should be reduced at the rate of 4 percent for each 1,000 feet above sea level. Contact the manufacturer or your gas company before changing orifice size.

Well Head Gas Installations
Some natural gas utilities use "well head" gas. This may affect the Btu output of the unit. Contact the gas company for the heating value. Then, contact the manufacturer to verify what orifice is needed for operation of the fireplace.

FIREPLACE DIMENSIONS

OUTER FIREBOX DIMENSIONS

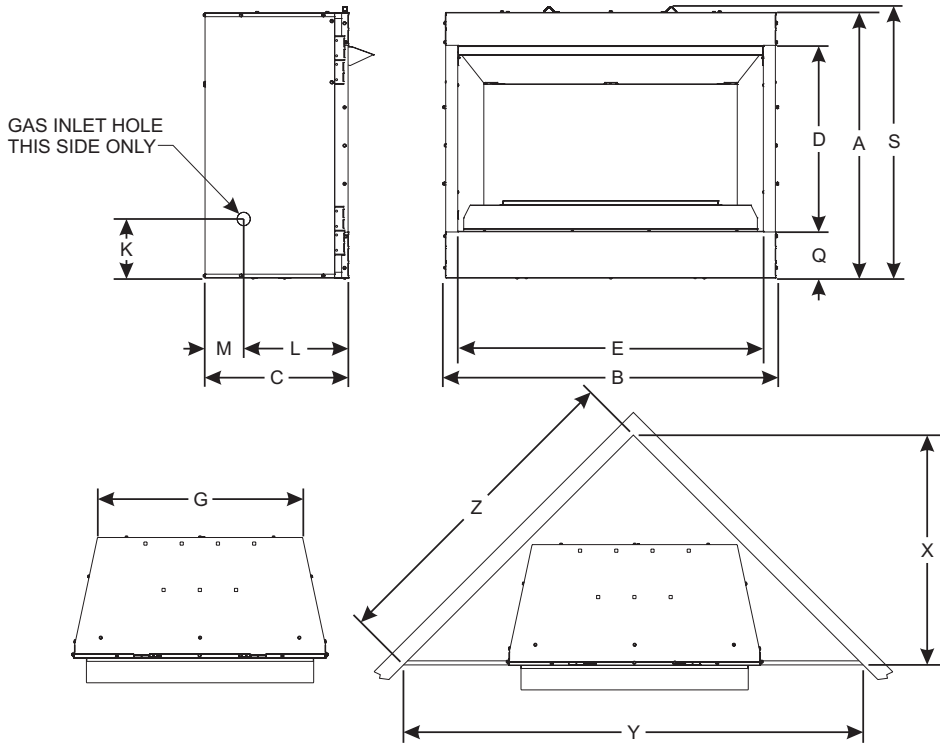

INNER FIREBOX DIMENSIONS

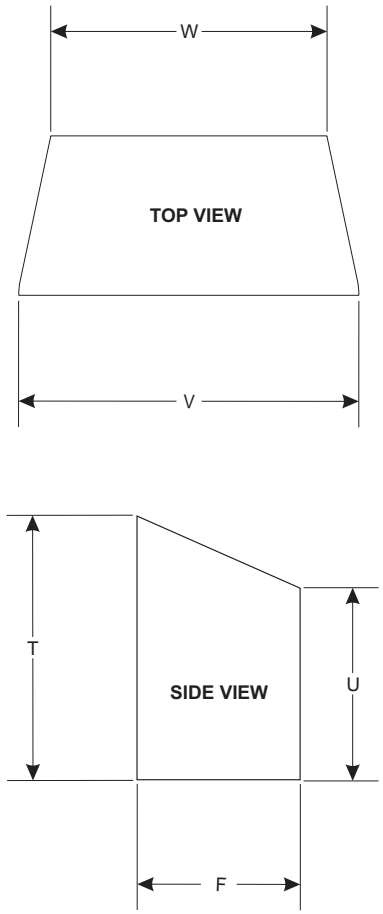

INDEX LETTER	DIMENSION DESCRIPTION	DIMENSIONS (in inches)	
		OP36	OP42
A	The maximum height of firebox face (excluding standoffs)	35-1/16	35-1/16
B	The maximum width of the firebox face (excluding nailing flanges)	40	44
C	The maximum depth of the firebox	19	19
D	The height of the firebox opening	24-1/4	24-1/4
E	The width of the firebox opening	36	40
F	The interior depth of the firebox	15-9/16	15-9/16
G	The rear exterior width of the firebox	31-7/8	35-7/8
K	Height from the bottom of the box to the gas line opening	2-7/8	2-7/8
L	Depth from the front of the box to gas line opening	10-3/8	10-3/8
M	Depth from rear of box to gas line opening	8-9/16	8-9/16
Q	Distance from floor to fireplace opening	6-3/16	6-3/16
S	Overall height to header (not shown)	35-13/16	35-13/16
T	Interior front height of firebox	24-3/16	24-3/16
U	Interior rear height of firebox	19-1/4	19-1/4
V	Interior front width of firebox	34-5/16	38-5/16
W	Interior rear width of firebox	28	32
X	Corner install depth	34-11/16	36-3/4
Y	Corner install width	69-5/16	73-5/16
Z	Corner install wall length	49-1/16	51-15/16

Figure 4

GAS SUPPLY

The fireplace installation must conform with local codes, or in the absence of local codes with the *National Fuel Gas Code, ANSI Z223.1/NFPA 54; International Fuel Gas Code, Natural Gas and Propane Installation Code, CSA B149.1;* or *Propane Storage and Handling Code, B149.2,* as applicable.

Check all local codes for requirements, especially for the size and type of gas supply line required.

Recommended Gas Pipe Diameter				
Pipe Length	Schedule 40 Pipe Inside Diameter		Tubing, Type L Outside Diameter	
	Nat.	LP	Nat.	LP
	(Dimensions in inches)			
0-10 feet	1/2	3/8	1/2	3/8
10-40 feet	1/2	1/2	5/8	1/2
40-100 feet	1/2	1/2	3/4	1/2
100-150 feet	3/4	1/2	7/8	3/4

***NOTICE*:** Check to confirm whether your local codes allow copper tubing or galvanized.
***NOTICE*:** Because some municipalities have additional local codes, consult your local authority and installation code.

Installing a New Gas Shut-Off Valve
Each appliance must have its own manual gas shut-off valve located in the vicinity of the unit. Where none exists, or where its size or location is not adequate, contact your local authorized installer for replacement or relocation.

Test for leaks. Turn fireplace off. Compounds used on threaded joints of gas piping shall be resistant to the action of liquefied petroleum gases. The installer must check all gas connections for leaks. Perform all leak tests with a leak test solution or soap solution. Rinse off all solution once testing is complete. Perform a pressure test on all unexposed connections.

Never use an exposed flame to check for leaks. Never pressure test with appliance connected; control valve will sustain damage. Disconnect the appliance from piping at the control valve inlet and cap the pipe before pressure testing.

Install a gas valve and ground joint union in the gas line upstream of the gas control to aid in servicing. The National Fuel Gas Code requires installing a drip line near the gas inlet. The drip line consists of a vertical length of capped pipe installed before the gas inlet to collect condensation and foreign particles. **See Figure 5.**

Do not break knockouts inside liners. Gas inlets should run under the fireplace floor. **See (GAS LINE CONNECTION) information on bottom right side of Page 16.**

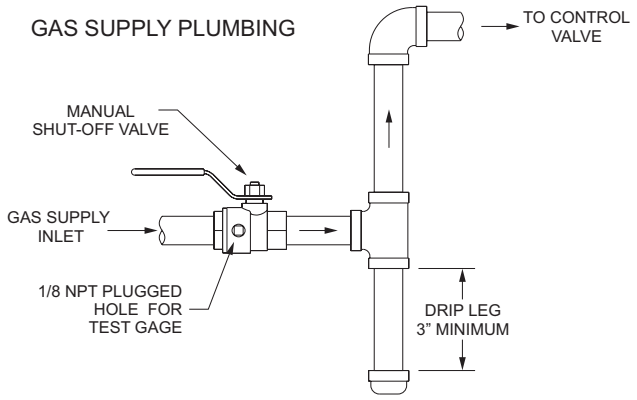

Figure 5

The use of the following gas connectors is recommended:
— ANSI Z21.24 Appliance Connectors of Corrugated Metal Tubing and Fittings
— ANSI Z21.45 Assembled Flexible Appliance Connectors of Other Than All-Metal Construction

The above connectors may be used if acceptable by the authority having jurisdiction The Commonwealth of Massachusetts requires that a flexible appliance connector cannot exceed 3 feet.

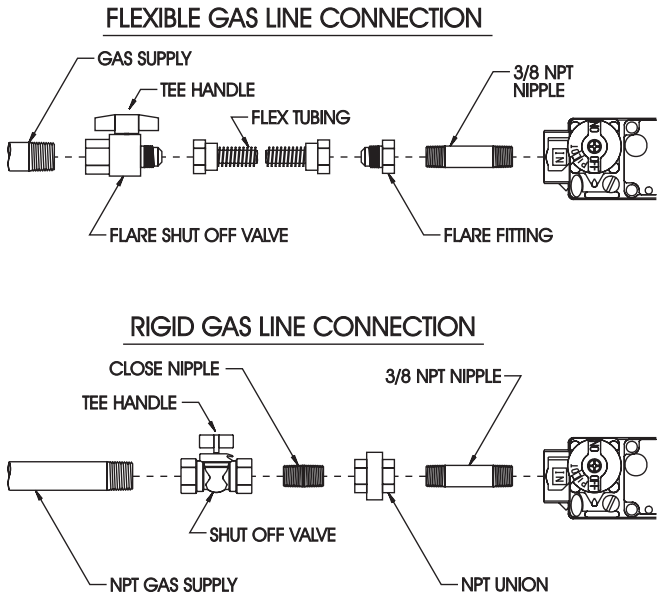

Figure 6

CLEARANCES

Top Framing and Finishing: Combustible framing materials requires 3/4 inch across top of unit. **See Figure 7**.

Sidewall Clearances: The clearance from the inside of the fireplace to perpendicular combustible side wall must not be less than 6 inches. **See Figure 8.**

Fireplace Face Clearance: For the first 1-3/4 inch back from face leave 3/8 inch side clearance. **See Figure 8.**

Fireplace Side and Back Clearances: The fireplace outer casing side (after the first 1-3/4 inch mentioned above) and back flanges are zero clearance to combustibles.

Fireplace Front Clearance: Leave at least 36 inches clearance from the front of the fireplace into the room.

Ceiling Clearances: The ceiling height must not be less than 84 inches from the floor. **See Figure 9.**

Mantel Clearances: Vent free fireplace models must use the hood supplied with the fireplace, or the optional extension hood available for each model. If a combustible mantel is installed, it must meet the clearance requirements detailed below.

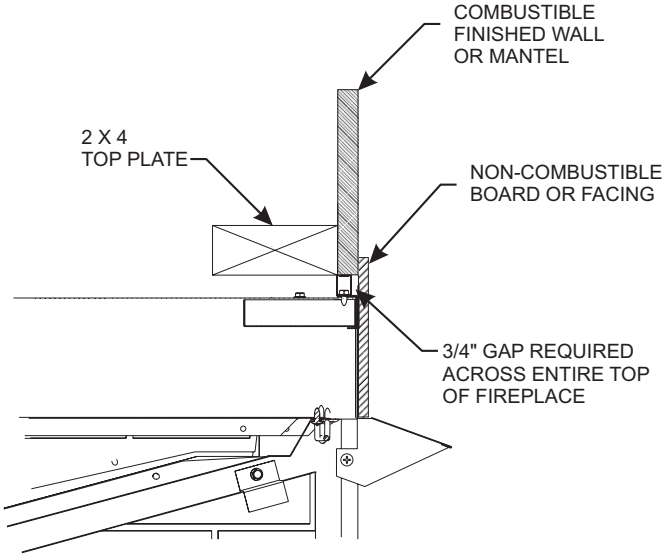

Figure 7 - Clearances to Combustibles

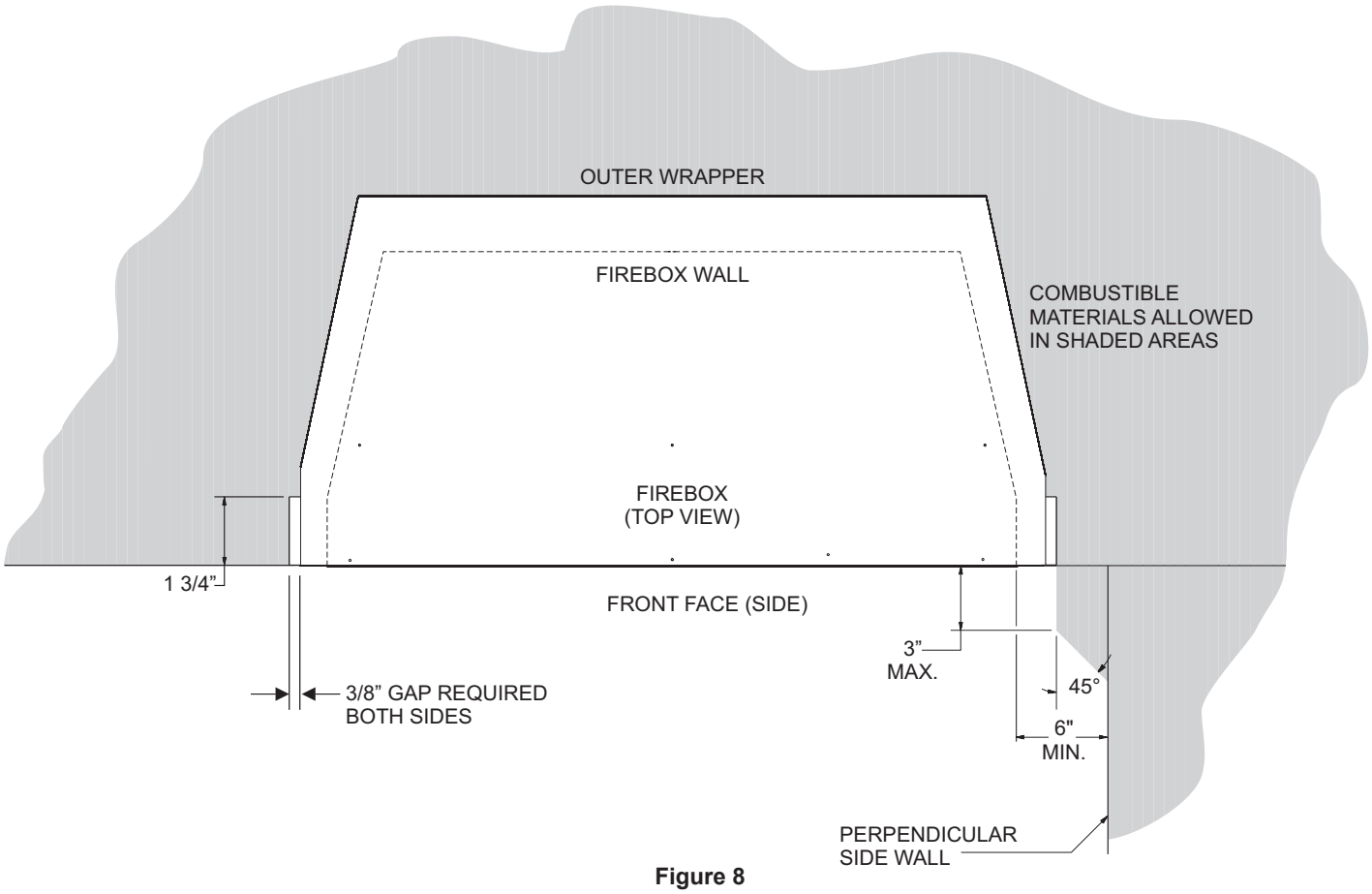

Figure 8

CLEARANCES

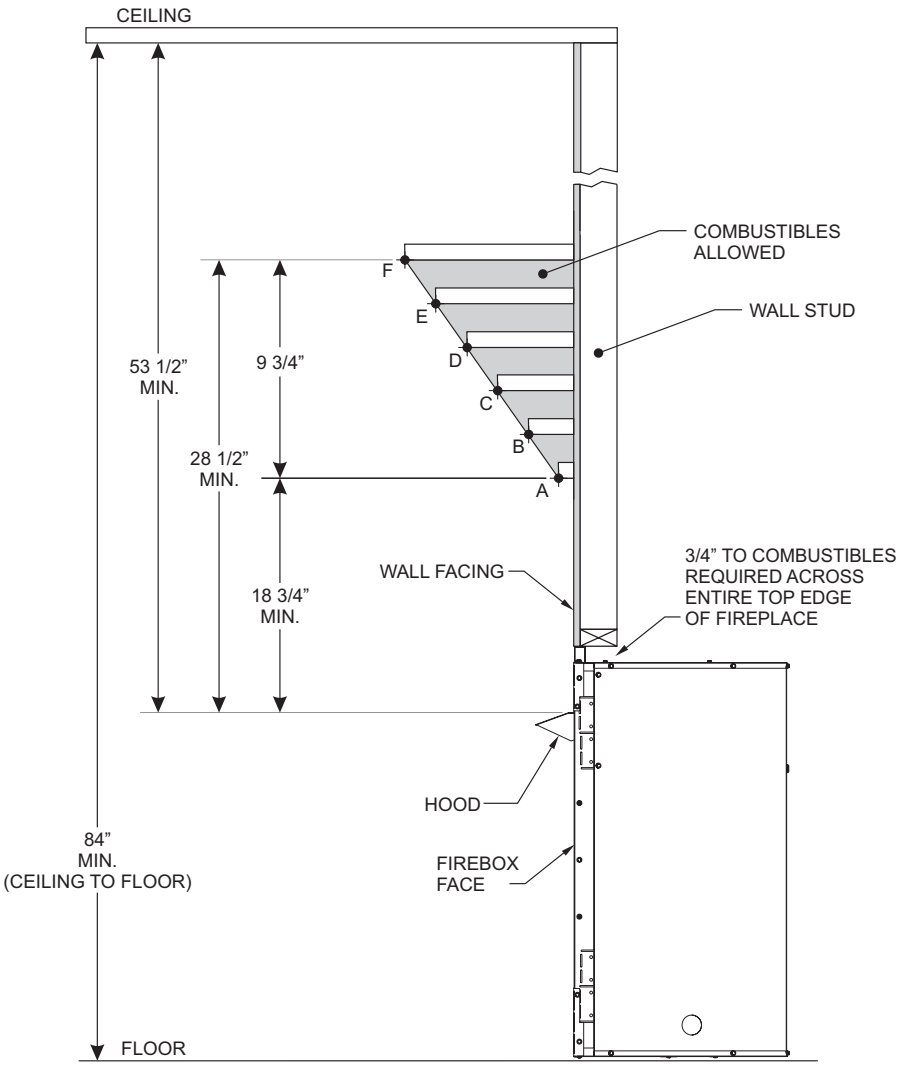

INDEX LETTER	Dimensions (inches)	
	DISTANCE FROM WALL SURFACE	DISTANCE ABOVE FIREPLACE HOOD
A	2	18-3/4
B	4	21-1/2
C	6	24-1/4
D	8	27
E	10	27-3/4
F	12	28-1/2

Figure 9

Television Considerations

Installing a television above a fireplace has become increasingly popular; however, the area above any fireplace gets hot and most TV manufacturers recommend against placing their products near a heat source.

If you install a television above this fireplace, Empire Comfort Systems accepts no responsibility for damage or injuries. Follow the television manufacturer's installation instructions, including any recommendations regarding proximity to heat sources.

If you have a TV above your fireplace, turn off the fireplace and let it cool completely before servicing or touching any buttons on the TV.

PLANNING INSTALLATION

In planning the installation for the fireplace, first determine where the unit will be installed, and then plan the gas supply piping.

The fireplace can be mounted on any of these surfaces:

1. A flat combustible or non-combustible surface.
2. A raised platform made of combustible material.
3. Four corners of the fireplace so contact is made on all four perimeter edges on the bottom of the unit.
   (Example: Four masonry blocks - if allowed by local codes)

If the fireplace will be installed directly on carpeting, tile or other combustible material other than wood flooring, your must first install a metal or wood panel extending the full width and depth of the unit.

Decide what additional components to include in your installation. Consult your dealer for assistance.

This fireplace is intended for installation on an outdoor patio or in your yard. This fireplace shall be used only outdoors in a well ventilated space and shall NOT be used in a building, garage, or other enclosed area.

Install the fireplace in an area sheltered from direct wind, which may cause erratic flames and main burner outage. Erratic flames could also cause soot on logs, walls or ceiling. Flame outages and sooting are nuisances but pose no safety issues.

Typical installation may include covered patio, gazebo or an outside wall of a house.

- Minimum porch area – 96 sq ft
- Minimum ceiling height – 84 inches

Installation in partial enclosures must conform to one of the following conditions:

- With walls on all sides, but with no overhead cover. **See Figure 10.**

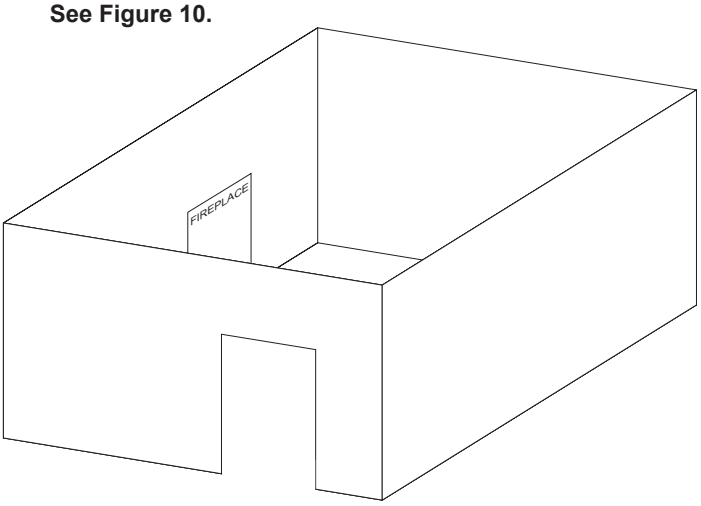

Figure 10

- Within a partial enclosure with an overhead cover and no more than two side walls. These side walls may be parallel, as in a breezeway or at right angles to each side. **See Figure 11.**

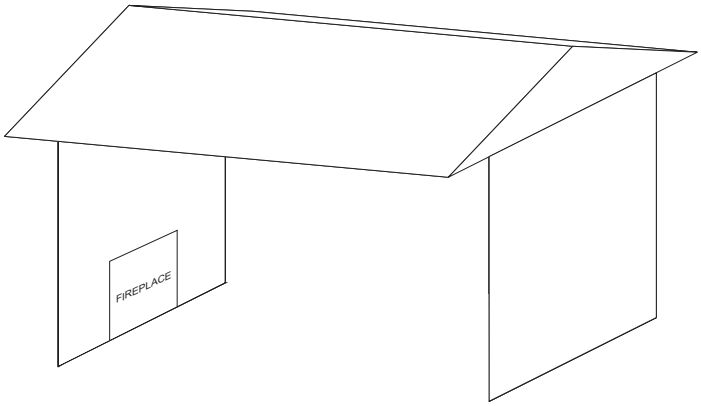

Figure 11

- This partial enclosure includes an overhead cover and three walls, no more than 30% or more of the horizontal periphery (i.e. perimeter) of the enclosure permanently open. These openings cannot be screened or have operable windows or shutters. **See Figure 12.**

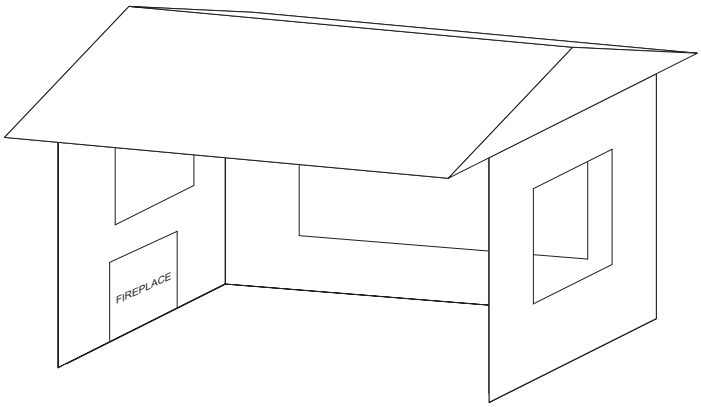

Figure 12

ATTENTION:
Vinyl Soffit, Vinyl Ceiling, Vinyl Overhang Disclaimer
Clearances are to heat resistant material (i.e. wood, metal). This does not include vinyl. Empire Comfort Systems Inc. will not be held responsible for heat damage caused to vinyl overhangs, vinyl ceilings or vinyl ventilated/unventilated soffits.

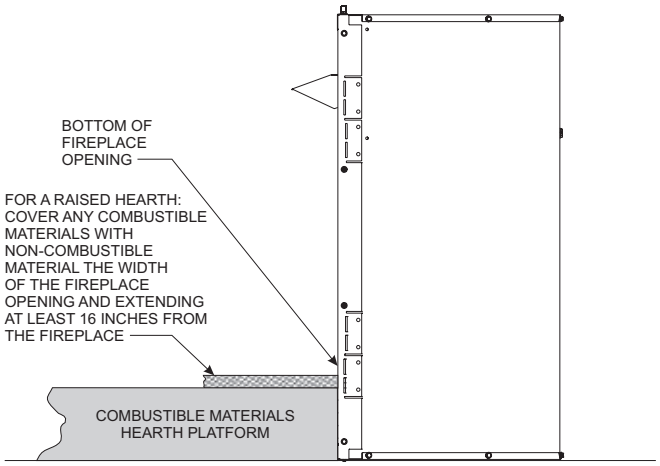

Figure 13

NOTICE: Hearth is not required if fireplace is installed on finished floor.

Fireplace Framing

Fireplace framing can be built before or after the fireplace is set in place. The fireplace framing should be constructed of metal studs or 2 x 4 lumber or heavier. The framing top plate or header may be as close as 3/4 inch to the top of the fireplace. Refer to **Figure 14** for fireplace framing dimensions.

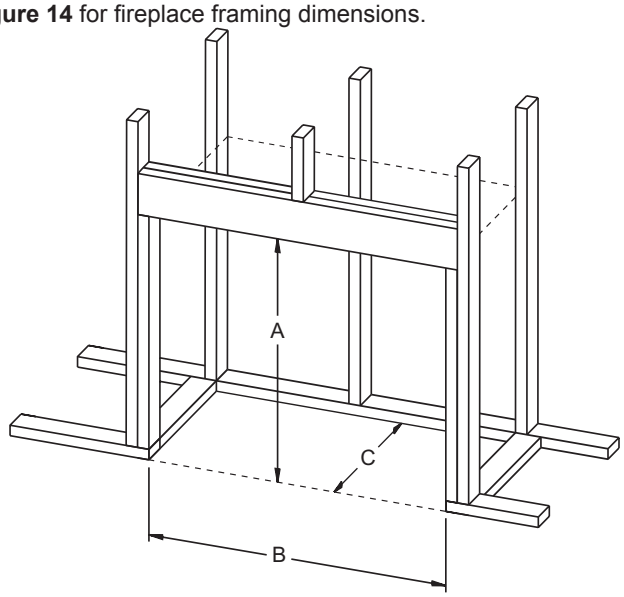

Premium Fireplace Framing Dimensions (inches)

Model	A	B	C
OP36FP	36	41	19-1/4
OP42FP	36	45	19-1/4

Premium Fireplace Framing Dimensions - If Installing Optional Drain Tray (inches)

Model	A	B	C
OP36FP	37	41	19-1/4
OP42FP	37	45	19-1/4

Figure 14

Locating Fireplace

Pry the top standoffs up and bend pieces as shown. Attach free-end to face top with two hex-head screws from hardware pack. Place fireplace in framing opening. Use the tabs on the side of the fireplace to attach fireplace to framing. Different tab locations can be used for wall materials with a thickness of 1/2 inch or 5/8 inch. **See Figure 15.**

Framing tabs should fit directly against framing material. Use at least one nail per bracket to secure in place.

Check squareness of the fireplace prior to securing to framed opening. **See Figure 16.**

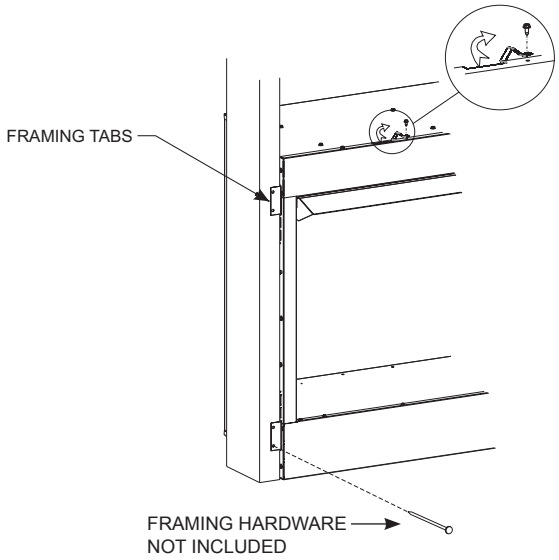

Figure 15

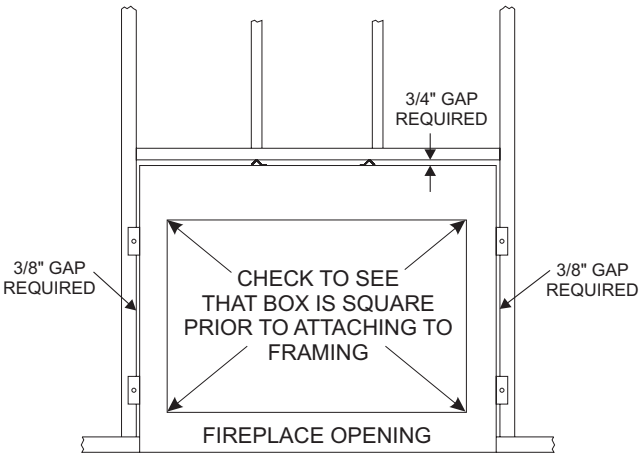

Figure 16

Extended Hoods

If the non-combustible facing material used to finish the fireplace is over 1 inch thick, an extended hood that extends 2 inch farther out into the room is recommended. Contract your Empire Dealer for details.

VB4H36SS Stainless Steel Extended Hood
VB4H42SS Stainless Steel Extended Hood

NOTICE: Do not break knockouts in concrete liners. Gas inlet connects to valve below firebox floor.

FIREPLACE INSTALLATION INSTRUCTIONS

Install the Hood

Failure to install the furnished hood (or optional extension hood) before the fireplace is used may create a fire hazard.

1. Loosen the two screws (A) holding fireplace top to face panel, then slide the hood flange between the fireplace top and face panel and re-tighten the screws. **See Figure 17.**
2. Install one screw at each end of the hood as shown (B). **See Figure 17.**

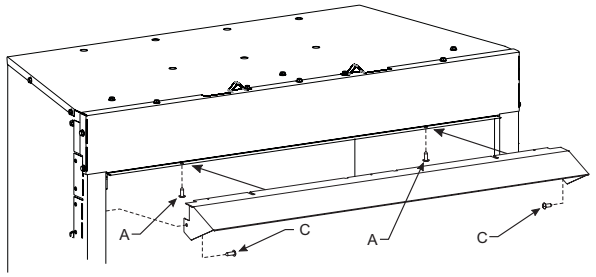

Figure 17

Finishing

All joints (top, bottom and sides), where the wall or decorative facing material meets the fireplace surround should be sealed with a 300°F minimum sealant material.

NOTICE: When installation application includes highly acidic materials such as acid wash or stone etching, protect fireplace finish with plastic stretch film. Once the film has been removed clean appliance immediately with a stainless steel cleaner.

Please note that areas where the film has been formed (corners, hems, etc.) may require extra cleaning to remove film residue. Ensure that all protective film has been removed from the fireplace prior to burning.

Cleaning Instructions at Installation

This appliance is built using mostly high-grade stainless steel to resist rust-through. In outdoor applications, all stainless steel will develop a dull patina and, depending on the local environment and on the materials used in the installation, may develop some surface oxidation. This does not affect the performance of the fireplace, and does not require any corrective action. If you prefer keeping your fireplace front looking factory-fresh, clean it with stainless steel cleaner.

GAS LINE CONNECTION

The gas line must be installed by a qualified service person in accordance with all building codes. The Commonwealth of Massachusetts requires that a flexible appliance connector cannot exceed 3 feet.

A flex-line and shut-off valve have been provided. **The gas shut-off valve must be located outside of the unit in an accessible area.**

Check the rating plate on the fireplace (on a chain by the gas valve) to ensure it shows the correct gas type. If the gas listed on the rating plate does not match the gas supply to the home, do not connect the fireplace. Contact your dealer for proper model.

Use an external regulator for all LP fireplaces to reduce the supply tank pressure to a maximum of 13 inches w.c. This is in addition to the regulator fitted to the fireplace.

⚠ WARNING
Connection directly to an unregulated LP supply can cause an explosion.

To install the gas line to the fireplace, remove the three piece concrete liners on the bottom of the fireplace. Remove 4 screws supporting the burner assembly, (one on each side and two in the back corners). Lift burner assembly and place in a safe location. Some models have other components that need to remain connected to the burner assembly. Move fireplace to the desired location and run hard pipe inside fireplace. Add connectors to attach flexline to hard pipe. Bring burner assembly to the fireplace and connect flexline. Check to eliminate gas leaks. Place burner assembly and re-attach with screws earlier removed. Re-install bottom concrete liners.

MILLIVOLT LIGHTING INSTRUCTIONS - OP(36,42)FP32

FOR YOUR SAFETY, READ BEFORE LIGHTING

⚠ WARNING: If you do not follow these instructions exactly, a fire or explosion may result causing property damage, personal injury or loss of life.

A. This appliance has a pilot which must be lighted by hand. When lighting the pilot, follow these instructions exactly.

B. BEFORE LIGHTING smell all around the appliance area for gas. Be sure to smell next to the floor because some gas is heavier than air and will settle on the floor.

WHAT TO DO IF YOU SMELL GAS

- **Do not try to light any appliance.**
- **Do not touch any electrical switch; Do not use any phone in your building.**
- **Immediately call your gas supplier from a neighbor's phone. Follow the gas supplier's instructions.**
- **If you cannot reach your gas supplier, call the fire department.**

C. Use only your hand to push in or turn the gas control knob. Never use tools. If the knob will not push in or turn by hand, don't try to force it; call a qualified service technician. Force or attempted repair may result in a fire or explosion.

D. Do not use this appliance if any part has been under water. Immediately call a qualified service technician to inspect the appliance and to replace any part of the control system and any gas control which has been under water.

LIGHTING INSTRUCTIONS

⚠ WARNING

- **Any glass doors shall be opened when the appliance is in operation.**
- **A fireplace screen must be in place when the appliance is operating and, unless other provisions for combustion air are provided, the screen shall have an opening(s) for introduction of combustion air.**

1. STOP! Read the safety information above.
2. Set the ON/OFF switch to "OFF."
3. Turn off all electric power to the appliance (if applicable).
4. Push in gas control knob slightly and turn clockwise to "OFF."
5. Wait ten (10) minutes to clear out any gas. Then smell for gas, including near the floor. If you smell gas, STOP! Follow "B" in the safety information above. If you do not smell gas, go to the next step.
   NOTICE: Knob cannot be turned from "PILOT" to "OFF" unless knob is pushed in slightly. Do not force.
6. Find pilot - follow metal tube from gas control. The pilot is in front of the middle log on the right side.
7. Turn gas control knob counterclockwise to "PILOT."

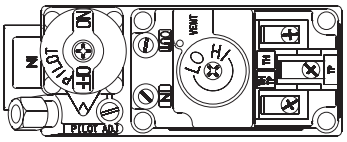

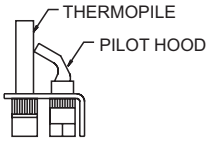

GAS CONTROL KNOB SHOWN IN "OFF" POSITION.

8. Push in control knob all the way and hold in. Immediately light the pilot with a match and lighter rod that is provided with the burner. Continue to hold the control knob in for about one (1) minute after the pilot is lit. Release knob, and it will pop back up. Pilot should remain lit. If it goes out, repeat steps 4 through 8.
   If knob does not pop up when released, stop and immediately call a qualified service technician or gas supplier.
   If the pilot will not stay lit after several tries, turn the gas control knob to "OFF" and call your service technician or gas supplier.
9. Turn gas control knob counter clockwise to "ON."
10. Set the ON/OFF switch to "ON."

TO TURN OFF GAS TO APPLIANCE

1. Locate On/Off gas shut-off valve and turn clockwise to "OFF." Do not force.

IP LIGHTING INSTRUCTIONS - OP(36,42)FP72

FOR YOUR SAFETY, READ BEFORE LIGHTING

⚠ WARNING: If you do not follow these instructions exactly, a fire or explosion may result causing property damage, personal injury or loss of life.

A. BEFORE LIGHTING, smell around the appliance area for gas. Be sure to smell next to the floor because some gas in heavier than air and will settle on the floor.

WHAT TO DO IF YOU SMELL GAS

- **Do not try to light any appliance.**
- **Do not touch any electrical switch.**
- **Do not use any phone in your building.**
- **Immediately call your gas supplier from a neighbor's phone. Follow the gas supplier's instructions. If you can not reach your gas supplier, call the fire department.**

B. Use only your hand to push in or turn the gas control knob. Never use tools. If the knob will not push in or turn by hand, don't try to repair it, call a qualified service technician. Force or attempted repair may result in a fire or explosion.

C. Do not use this appliance if any part has been under water. Immediately call a qualified service technician to inspect the appliance and to replace any part of the control system and any gas control which has been under water.

LIGHTING INSTRUCTIONS

1. STOP! Read the safety information above.
2. Turn gas shut-off valve counterclockwise to "ON" position.
3. Wait ten (10) minutes to clear out any gas. Then smell for gas, including near the floor. If you smell gas, STOP! Follow "B" in the safety information above on this label. If you do not smell gas, go to the next step.
4. Find spark and sensor probes.
5. Using the remote control, turn main flame to "ON." If the burner does not light within 60 seconds, stop and go to Step 3.
6. If the burner does not stay lit, stop and immediately call a qualified service technician or gas supplier.
7. If the burner does not operate properly after several tries, turn the gas control knob clockwise to "OFF" and call your service technician or gas supplier.
8. Operation of the gas valve must be controlled by using the hand-held remote control. Refer to remote instructions for detailed operation information. See page 21.

NOTICE: See Troubleshooting, page 23.

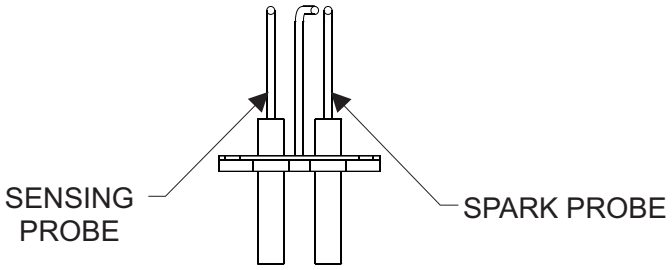

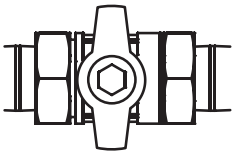

OFF

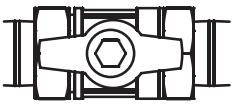

ON

TO TURN OFF GAS TO APPLIANCE

1. **Locate On/Off gas shut-off valve and turn clockwise to "OFF." Do not force.**

MILLIVOLT PILOT AND MAIN BURNER FLAME CHARACTERISTICS

Pilot Flame Pattern

Figure 18 shows a correct pilot flame pattern. The correct flame will be blue and will extend beyond the thermopile. The flame will surround the thermopile just below the tip. A slight yellow flame may occur where the pilot flame and main burner flame meet. After prolonged use, the fireplace's pilot burner may require cleaning to maintain the proper flame. Clean with canned air. Let pilot sit to dry.

To Remove Pilot Orifice

1. Disconnect the pilot supply line at the pilot burner.
2. Remove pilot orifice from pilot burner. It may be necessary to tap on pilot burner in order to remove the pilot orifice.

System Check

A millivolt meter set to the 0-1000 mV range is required to check the system. Millivolt (mV) readings should be:

- Across the thermopile terminals, 400-450 mV with thermostat OFF.
- Across the thermopile terminals, 150-250 mV with thermostat ON.
- Across the optional switch wires at the valve, less than 30 mV with optional switch ON.
- Across the optional switch wires at the optional switch, less than 5 mV with optional switch ON. Strong winds, dirty pilot and low pressure will reduce readings.

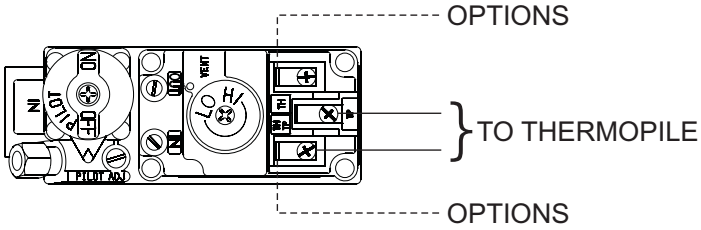

Figure 18

Pilot Flame Pattern

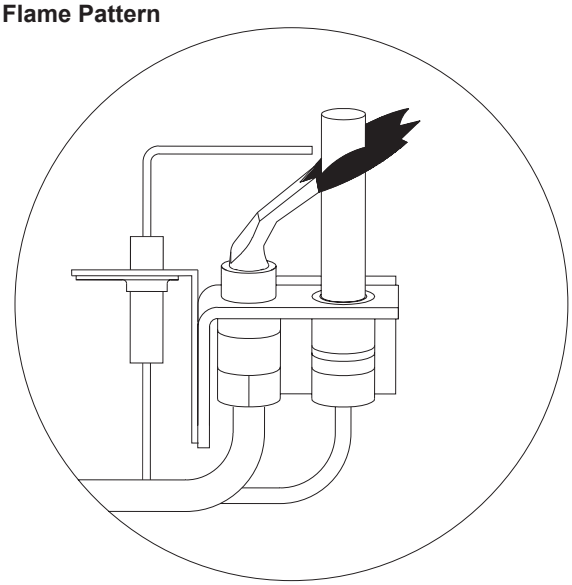

Figure 19

If pilot flame pattern is incorrect

- See Troubleshooting, page 23.

Main Burner Flame Pattern

The main burner flame will be blue and yellow.

Main Burner Flame Ignition and Extinction

When the main burner is ignited it will take a few seconds for the full flame pattern to develop.

When the main burner is extinguished it will take a few seconds for the flames to disappear. It is normal to have the flames burn down, as the remaining gas is burned.

WIRING

Label all wires prior to disconnection when servicing controls. Wiring errors can cause improper and dangerous operation. Verify proper operation after servicing.

Millivolt thermopile is self-powered. The gas valve does not require 120 volts. Maximum length of 20 ft of 16 AWG to conductor wires is to be used with all optional switches.

Use the two leads (Red and Green) to attach optional controls.

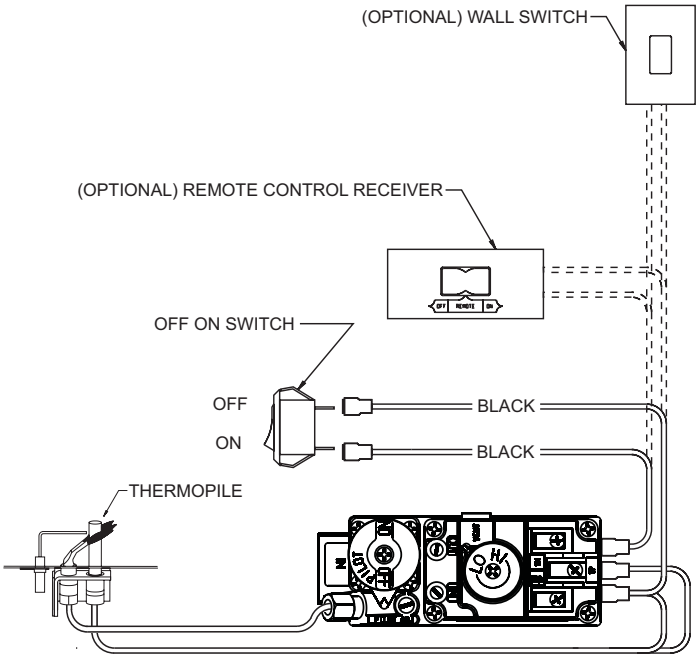

IF ANY OF THE ORIGINAL WIRE AS SUPPLIED WITH THIS UNIT MUST BE REPLACED, IT MUST BE REPLACED WITH NO. 18, 150ºC WIRE OR ITS EQUIVALENT

Figure 20 - Millivolt Wiring

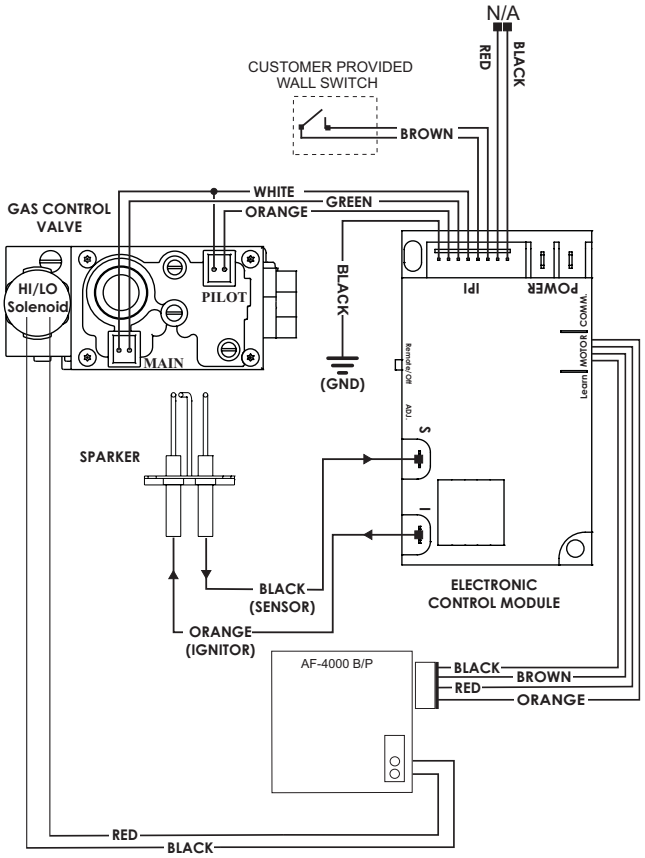

Figure 21 - IP Wiring

NOTICE: Do not connect 120V to this unit.

***NOTICE* for IP fireplaces only:** The fireplace may be operated without the remote by connecting the brown control module wires to a wall switch. The remote/off switch on the control module must be in the "OFF" position.

NOTICE: For remote use, slide switch on battery box to "ON" position.

IP REMOTE CONTROL INSTALLATION & OPERATION

Two-function wireless remote control system for On/Off-Hi/Lo operation of the AF-4000 gas control valve

FCC REQUIREMENTS

NOTICE: The manufacturer is not responsible for any radio or TV interference caused by unauthorized modifications to this equipment. Such modifications could void the user's authority to operate the equipment.

INTRODUCTION

This remote control system was developed to provide a safe, reliable, and user-friendly remote control system for use with the AF-4000 gas control valve used with some gas heating appliances. The system operates on radio frequencies (RF) within a 20-foot range using non-directional signals. The system operates on one of 255 factory-programmed security codes; the remote receiver must learn the transmitter code prior to initial use.

TRANSMITTER

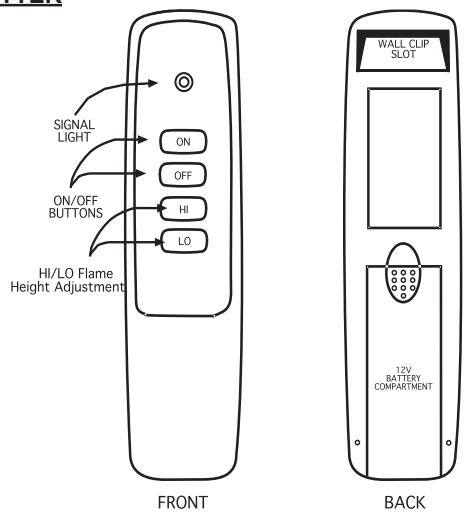

This remote control Transmitter allows the user to turn the fireplace on and off, and adjust the flame height.

The transmitter operates with a 12V battery (included). Before using the transmitter, install the battery in the battery compartment.

For long life and optimal performance, replace the transmitter battery annually with a 12V alkaline battery only.

Under normal use, an alkaline battery can last up to 12 months. Frequent use of the Hi/Lo buttons may reduce battery life. The transmitter should operate with as little as 9.0 volts battery power.

The transmitter has ON/OFF and HI/LO functions. When you press a button on the transmitter, the signal light illuminates to verify that a signal is being sent.

Upon initial use, there may be a delay of three seconds before the remote receiver responds. This is part of the system's design. If the signal light does not illuminate, check the position of the transmitter's battery.

MATCHING SECURITY CODES

Each transmitter can use one of 255 security codes. You may need to program the module to match the transmitter security code upon initial use, or after replacing batteries, or if you need to replace the transmitter.

Slide button on the module to the REMOTE position;

Press and release the LEARN button on the module to accept the transmitter security code and then press any button on the transmitter.

A change in the module's beeping pattern indicates the transmitter's code has been accepted. Once the module has accepted the new transmitter code, the new security code will replace the old one.

The microprocessor that controls the security code matching procedure is controlled by a timing function. If you are unsuccessful in matching the security code on the first attempt, wait two minutes before trying again - this allows the microprocessor to reset its timer circuitry. If you are unable to match the code after three tries, contact your dealer..

OPERATION

1. This remote control will operate the AF-4000 gas control valves ON/OFF and flame height HI/LO of the main burner.
2. When the ON button is depressed the transmitter sends a RF signal to the module. The module then sends 3 volts of power to the internal solenoid. The internal solenoid then opens the gas flow to the main burner ON/OFF. The system uses a pulse or continuous 3 volts DC power to operate the flame HI/LO solenoid motor drive.
3. The valve will light in the HI setting, then revert to the last used setting. If the burner fluctuates between HI and LO, set the burner to HI. After five minutes, set the burner to LO.

SPECIFICATIONS

BATTERIES: Transmitter 12V - (A23) Operating Frequency: 303.8 MHZ FCC ID No.'s: transmitter K9I1001

Canadian ISC ID No.'s: transmitter - 2439 102 728

CLEANING AND SERVICE

Keep the control compartment, logs and burner area clean by vacuuming or brushing the area at least once a year.

Cleaning Instructions
This fireplace is built using mostly high-grade stainless steel to resist rust-through. In outdoor applications, all stainless steel will develop a dull patina and, depending on the local environment and on the materials used in the installation, may develop some surface oxidation (rust). This does not affect the performance of the fireplace, and does not require any action to correct. If you prefer keeping your fireplace front looking factory-fresh, clean it as required with stainless steel cleaner.

⚠ WARNING
The logs and burner can get very hot - handle only when cool.

Always turn off gas to the fireplace before cleaning. For relighting, refer to the lighting instructions located on the rating plate or on pages 17 and 18.

PERIODIC CLEANING – Refer to parts diagram for location of items discussed below.

- Do not use cleaning fluid to clean logs or any part of this fireplace.
- Brush Logs with soft bristle brush or vacuum with brush attachment.
- Remove loose particles and dust from the burner areas, controls, piezo covers and grate.
- Inspect and clean burner air intake hole. Remove lint or particles with brush. Failure to keep air intake hole clean will result in poor combustion.
- For damp or wet ignitor problems, see item 11 in the troubleshooting section.

ANNUAL CLEANING/INSPECTION – Refer to parts diagram for location of items discussed below.

- Inspect and clean burner air intake hole. Remove lint or particles with vacuum or brush. Failure to keep air intake hole clean will result in poor combustion.
- Inspect and clean all burner ports.
- Inspect ignitor for operation and accumulation of lint at air intake ports.
- Verify flame pattern and log placement for proper operation.
- Verify smooth and responsive ignition of main burner.
- Replace batteries annually in the remote control system on in the IP battery backup.

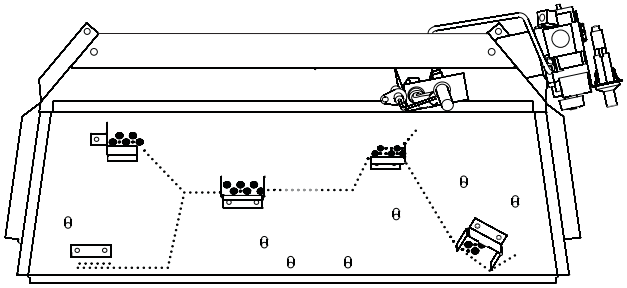

Millivolt - Figure 22

Visually check the ignitor for dirt and damage as the fireplace is installed.

In normal operation at full rate after 10 to 15 minutes, the flame appearance should be sets of yellow flames.

NOTICE: All flames will be random by design, flame height will go up and down.

Initial Break-in
The initial break-in operation should last 2-3 hours with the burner at the highest setting. Any odors remaining after this initial break-in will be slight and will disappear with continued use.

TROUBLESHOOTING
SYMPTOMS - POSSIBLE CAUSES AND CORRECTIONS

Turn appliance OFF and allow to cool before servicing. Only a qualified service person should service and repair the fireplace.

1. **When power button is pressed, there is no spark.**
   a. Ignitor electrode not connected to ignitor cable - Reconnect ignitor cable.
   b. Ignitor cable pinched or wet. Keep ignitor cable dry - Free ignitor cable if pinched by any metal or tubing.
   c. Broken ignitor cable - Replace ignitor cable.
   d. Ignitor electrode positioned wrong - Replace ignitor.
   e. Ignitor electrode is broken - Replace ignitor.

2. **Appliance produces odors.**
   a. Appliance burning vapors from paint, hair spray, glues, etc. - Ventilate area. Stop using odor-causing products while fireplace is running.
   b. Gas leak - Locate and correct all leaks.

3. **Appliance shuts off during use.**
   a. Low batteries - Replace batteries in remote receiver.
   b. Low line pressure - Check line pressure to the valve.
   c. Defective sensor - Replace.

4. **Gas odor even when control knob is in OFF position.**
   a. Gas leak - Locate and correct all leaks.
   b. Control valve defective - Replace control valve.

5. **When switch is "ON," there is spark, but no ignition.**
   a. Gas supply turned off or manual shutoff valve closed - Turn on gas supply or open manual shutoff valve.
   b. Control knob not in PILOT position - Turn control knob to PILOT position. (Millivolt fireplaces)
   c. Control knob not pressed in while in PILOT position - Press in control knob while in PILOT position. (Millivolt fireplaces)
   d. Air in gas lines when installed - Continue holding down control knob. Repeat ignition operation until air is removed and pilot light ignites.

6. **Burner flame goes out when control knob is released.**
   a. Control knob not fully pressed in - Press in control knob fully.
   b. Control knob not pressed in long enough - After pilot lights, keep control knob pressed in 30 seconds.
   c. Manual Shutoff valve not fully open - Fully open manual shutoff valve.
   d. Thermocouple connection loose at control valve - Hand tighten until snug, then tighten with wrench 1/4 turn more.
   e. Pilot flame not touching thermocouple, which allows thermocouple to cool, causing pilot flame to go out. This problem could be caused by either low gas pressure or dirty or partially clogged pilot - Contact local gas company.
   f. Thermocouple damaged - Replace thermocouple.
   g. Control valve damaged - Replace control valve.

7. **Burner does not light.**
   a. Burner orifice clogged - Clean burner or replace main burner orifice.
   b. Burner orifice diameter is too small - Replace burner orifice.
   c. Inlet gas pressure is too low - Contact qualified service person.
   d. Low batteries - replace batteries in remote receiver and transmitter.

8. **If burning at main burner orifice occurs (a loud, roaring blow torch noise).**
   a. Turn off burner assembly and contact a qualified service person.
   b. Manifold pressure is too low - Contact local gas company.
   c. Burner orifice clogged - Clean burner or replace burner orifice.

9. **Logs appear to smoke after initial operation.**
   a. Vapors from paint or curing process of logs - Problem will stop after a few hours of operation.
   b. If problem persists turn off fireplace and call a qualified service person.

10. **Appliance whistles when main burner is lit.**
    a. Main burner is cold - Turn control knob to LOW and let warm up for several minutes.
    b. Air in gas line - Operate burner until air is removed from line. Have gas line checked by local gas company.
    c. Dirty or partially clogged burner orifice - Clean burner or replace burner orifice.

11. **Unit won't light due to damp or wet ignitor.**
    a. For damp or wet conditions, it may be necessary to dry the ignitor. To do this push the HI and LO flame buttons in and hold for two to three minutes then release. Light the fireplace as usual.

12. **Burner fluctuates between HI and LO at startup with no command from the remote.**
    a. Set the burner to HI. After five minutes, set the burner to LO.

If the gas quality is bad, your burner may not stay lit, the burners may produce soot and the fireplace may backfire when lit. If the gas quality or pressure is low, contact your local gas supplier immediately.

PARTS VIEW

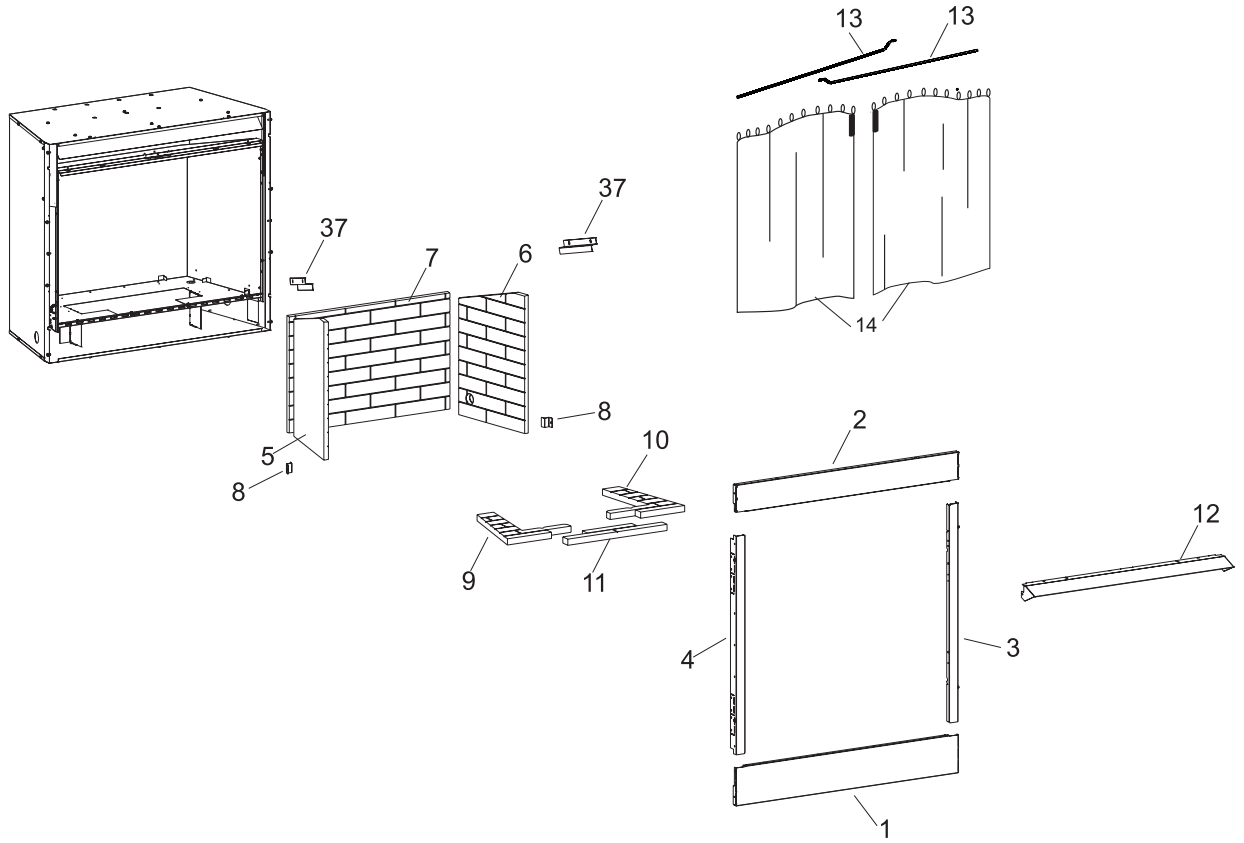

IP BURNER

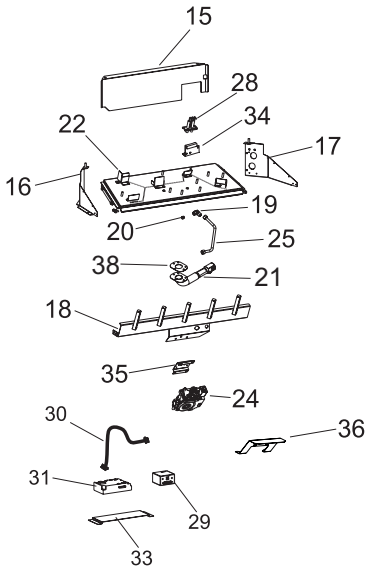

MILLIVOLT BURNER

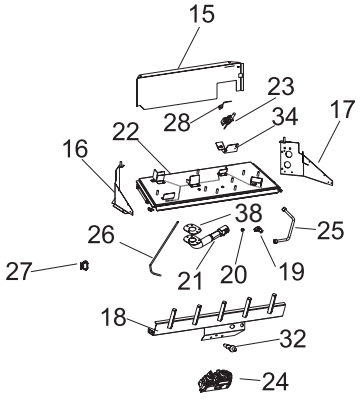

PARTS LIST

Index No.	Part No.				Description
	OP36FP32	OP36FP72	OP42FP32	OP42FP72	
1	33848	33848	33849	33849	Face, Bottom
2	33851	33851	33852	33852	Face, Top
3	33854	33854	33854	33854	Face, Side - Right
4	33856	33856	33856	33856	Face, Side - Left

PARTS LIST

Index No.	Part No.				Description
	OP36FP32	OP36FP72	OP42FP32	OP42FP72	
5	R10391	R10391	R10391	R10391	Liner, Side - Left
6	R10392	R10392	R10392	R10392	Liner, Side - Right
7	R10390	R10390	R10394	R10394	Liner, Rear
8	33885	33885	33885	33885	Liner Bracket - Front (2 Required)
9	R10767	R10767	R10770	R10770	Hearth Floor - Left
10	R10768	R10768	R10771	R10771	Hearth Floor - Right
11	R10769	R10769	R11025	R11025	Hearth Floor - Valve Cover
12	21162	21162	33609	33609	Hood
13	R11036	R11036	R11037	R11037	Curtain, Rod (2 Required)
14	R10765	R10765	R10765	R10765	Curtain, Screen (2 Required)
15	27934	27934	27935	27935	Rear Log Support
16	27930	27930	27930	27930	Burner Support - Left
17	27932	27932	27932	27932	Burner Support - Right
18	28557	28557	28558	28558	Grate Tang Assembly
19	P253	P253	P253	P253	Orifice Fitting
20	P280	P280	P280	P280	Orifice - Nat
20	P276	P276	P276	P276	Orifice - LP
21	R11979	R11979	R11979	R11979	Air Shutter / Venturi
22	27936	27936	27937	27937	Burner Assembly
23	R7158	--	R7158	--	Pilot - Nat (Thermopile not included)
23	R7157	--	R7157	--	Pilot - LP (Thermopile not included)
24	R10407	R12005	R10407	R12005	Valve - Nat
24	R10408	R10810	R10408	R10810	Valve - LP
25	27803	27804	27803	28086	Inlet Tube Assembly
26	27805	--	27805	--	Pilot Tube
27	R11558	--	R11558	--	On/Off/Remote Switch
28	R1155	R10814	R1155	R10814	Spark Probe and Wires
29	--	R10813	--	R10813	Battery Pack and Wire Assembly
30	--	R10812	--	R10812	Wire Harness
31	--	R10811	--	R10811	Control Module
32	R9761	--	R9761	--	Piezo Ignitor
33	--	28539	--	28539	Control Module Base
34	28088	34502	28088	34502	Ignitor Bracket
35	--	28081	--	28081	Valve Bracket
36	--	31514	--	31514	Water Shield
37	27338	27338	27338	27338	Liner Bracket - Top (2 Required)
38	R11977	R11977	R11977	R11977	Venturi Gasket
NS	R11927	R11927	R11927	R11927	Shut-Off Valve
NS	--	R10815	--	R10815	Remote Control, Hand Held with battery (2 required)
NS	R1054	--	R1054	--	Thermopile
NS	P251	P251	P251	P251	Coupling
NS	R11026	--	R11026	--	Wire Harness
NS	B101393	B101393	B101393	B10393	Flexline - 25 inches

NS - Not Shown

USE ONLY MANUFACTURER'S REPLACEMENT PARTS.
USE OF ANY OTHER PARTS COULD CAUSE INJURY OR DEATH.

MASTER PARTS DISTRIBUTOR LIST

To Order Parts Under Warranty, please contact your local Empire dealer. See the dealer locator at www.empirecomfort.com. To provide warranty service, your dealer will need your name and address, purchase date and serial number, and the nature of the problem with the unit.
To Order Parts After the Warranty Period, please contact your dealer or one of the Master Parts Distributors listed below. This list changes from time to time. For the current list, please click on the Master Parts button at www.empirecomfort.com. Please note: Master Parts Distributors are independent businesses that stock the most commonly ordered Original Equipment repair parts for Heaters, Grills, and Fireplaces manufactured by Empire Comfort Systems Inc.

Dey Distributing
1401 Willow Lake Boulevard
Vadnais Heights, MN 55101

Phone: 651-490-9191
Toll Free: 800-397-1339
Website: www.deydistributing.com
Parts: Heater, Hearth and Grills

F. W. Webb Company
200 Locust Street
Hartford, CT 06114

Phone: 860-722-2433
Toll Free: 800-243-9360
Fax: 860-293-0479
Toll Free Fax: 800-274-2004
Websites: www.fwwebb.com & www.victormfg.com
Parts: Heater, Hearth and Grills

East Coast Energy Products
10 East Route 36
West Long Branch, NJ 07764

Phone: 732-870-8809
Toll Free: 800-755-8809
Fax: 732-870-8811
Website: www.eastcoastenergy.com
Parts: Heater, Hearth and Grills

HOW TO ORDER REPAIR PARTS

Parts Not Under Warranty
Order parts through your Service Person, Dealer, or a Master Parts Distributor. See this page for the Master Parts Distributor list. For best results, the service person or dealer should order parts through the distributor. Parts can be shipped directly to the **service person/dealer.**

Warranty parts
Warranty parts will need a proof of purchase and can be ordered by your Service Person or Dealer.

All parts listed in the Parts List have a Part Number. When ordering parts, first obtain the Model Number and Serial Number from the rating plate on your equipment. Then determine the Part Number (not the Index Number) and the Description of each part from the following illustration and part list. Be sure to give all this information . . .

Appliance Model Number _____ Part Description _____

Appliance Serial Number _____ Part Number _____

Type of Gas (Propane or Natural) _____

Do not order bolts, screws, washers or nuts. They are standard hardware items and can be purchased at any local hardware store.

Shipments contingent upon strikes, fires and all causes beyond our control.

WARRANTY TERMS

Empire Comfort Systems Inc. warranties this hearth product to be free from defects at the time of purchase and for the periods specified below. Hearth products must be installed by a qualified technician and must be maintained and operated safely, in accordance with the instructions in the owner's manual. This warranty applies to the original purchaser only and is not transferable. All warranty repairs must be accomplished by a qualified gas appliance technician.

Limited Five-Year Parts Warranty – All Components (Except Remote Controls, Thermostats, Accessories and Replacement Parts)

• Should any part fail because of defective workmanship or material within five years from the date of purchase, Empire will repair or replace at Empire's option.

Limited One-Year Parts Warranty – Remote Controls, Thermostats, Accessories, and Parts

• Should any remote control, thermostat, accessory, or other part fail because of defective workmanship within one year from the date of purchase, Empire will repair or replace at Empire's option.

Duties of the Owner

• The appliance must be installed by a qualified installer and operated in accordance with the instructions furnished with the appliance.

• A bill of sale, cancelled check, or payment record should be kept to verify purchase date and establish warranty period.

• Ready access to the appliance for service.

What Is Not Covered

• Damages that might result from the use, misuse, or improper installation of this appliance.

• Travel, diagnostic costs and freight charges on warranted parts to and from the factory.

• Claims that do not involve defective workmanship or materials.

• Unauthorized service or parts replacements.

• Removal and reinstallation cost.

• Inoperable due to improper or lack of maintenance.

How To Get Service

• To make a claim under this warranty, please have your receipt available and contact your installing dealer. Provide the dealer with the model number, serial number, type of gas, and purchase verification. The installing dealer is responsible for providing service and will contact the factory to initiate any warranted parts replacements. Empire will make replacement parts available at the factory. Shipping expenses are not covered.

• If, after contacting your Empire dealer, service received has not been satisfactory, contact: Consumer Relations Department, Empire Comfort Systems Inc., PO Box 529, Belleville, Illinois 62222, or send an e-mail to info@empirecomfort.com with "Consumer Relations" in the subject line.

Your Rights Under State Law

• This warranty gives you specific legal rights, and you may also have other rights, which vary from state to state.

Empire Comfort Systems Inc.
Belleville, IL

If you have a general question about our products, please e-mail us at info@empirecomfort.com.

If you have a service or repair question, please contact your dealer.

www.empirecomfort.com