This Owner's Manual is provided and hosted by Appliance Factory Parts.

Appliance Factory Parts
Experts in BBQ, Humidifier, & Appliance Parts
1-800-955-7075

# White Mountain Hearth DVF42XKR Owner's Manual

Shop genuine replacement parts for White Mountain Hearth DVF42XKR

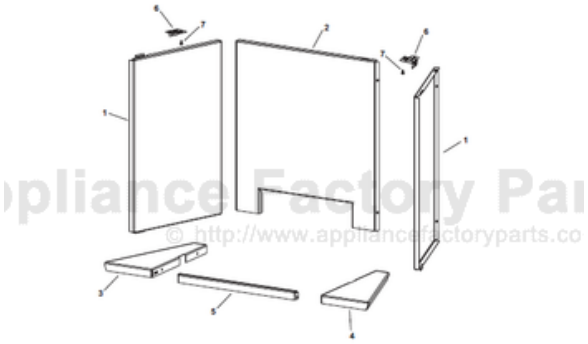

Find Your White Mountain Hearth Fireplace Parts - Select From 539 Models

-------- Manual continues below --------

# DVCX LINER & FLOOR KITS INSTALLATION INSTRUCTIONS

GAS-FIRED
C UL US
LISTED

| BLACK REFLECTIVE LINERS | |
|---|---|
| **MODELS** | **DESCRIPTION** |
| DVP36XKR-1 | Traditional Black |
| DVP42XKR-1 | Traditional Black |
| **BLACK REFLECTIVE FLOORS** | |
| **MODELS** | **DESCRIPTION** |
| DVF36XKR-1 | Traditional Black |
| DVF42XKR-1 | Traditional Black |

| CERAMIC FIBER LINERS | |
|---|---|
| **MODELS** | **DESCRIPTION** |
| DVP(36,42)XCB-1 | Cottage Brick |
| DVP(36,42)XRB-1 | Rustic Brick |
| DVP42XRBW-1 | Rustic Brick White |
| **CERAMIC FIBER LINERS with FLOORS** | |
| **MODELS** | **DESCRIPTION** |
| DVP(36,42)XTS-1 | Traditional Stone |
| DVP(36,42)XWS-1 | Old World Stone |

**INSTRUCTIONS MUST BE LEFT WITH THE OWNER FOR FUTURE REFERENCE AFTER INSTALLATION**

| CARTON CONTENTS | | | |
|---|---|---|---|
| **Description** | **Black Reflective Liners** | **Black Reflective Floors** | **Ceramic Fiber Liners** |
| Rear Liner | 1 | - | 1 |
| Left Liner | 1 | - | 1 |
| Right Liner | 1 | - | 1 |
| Left Rear Leg | - | - | 1 |
| Right Rear Leg | - | - | 1 |
| Left Floor | - | 1 | 1 |
| Right Floor | - | 1 | 1 |
| Front Left Floor | - | 1 | 1 |
| Front Right Floor | - | 1 | 1 |
| Liner Bracket | 2 | - | 2 |
| #10 x 1/2 Screw | 2 | - | 2 |
| Rear Liner Insulation | 1 | - | - |

**Tools needed:** Phillips screw driver

**Installation of Floors**

1. Remove glass door and control panel. See the appliance owner's manual for more detailed information.
2. Place the bottom side floor as shown in **Figure 1.**

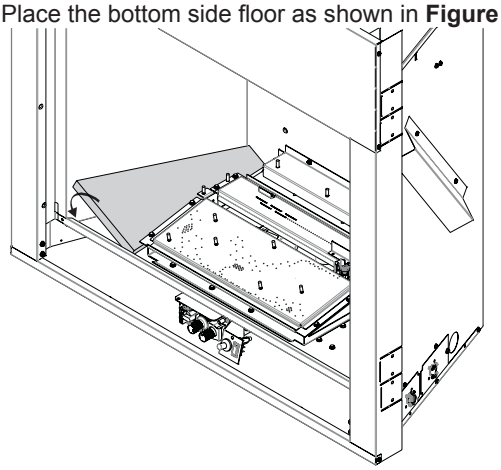

**Figure 1**

3. Place bottom middle floor as shown in **Figure 2.**

**NOTE:** The Ceramic Fiber floor is two pieces and the Black Reflective floor is one piece.

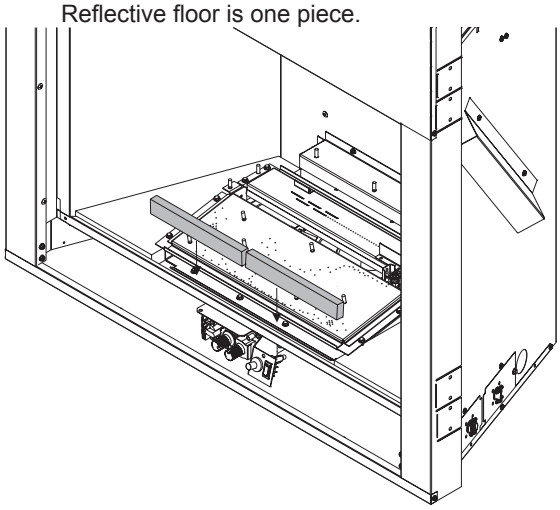

**Figure 2**

**Installation of Liners**

1. Prebend the brackets included with the kit as shown in **Figure 3.**

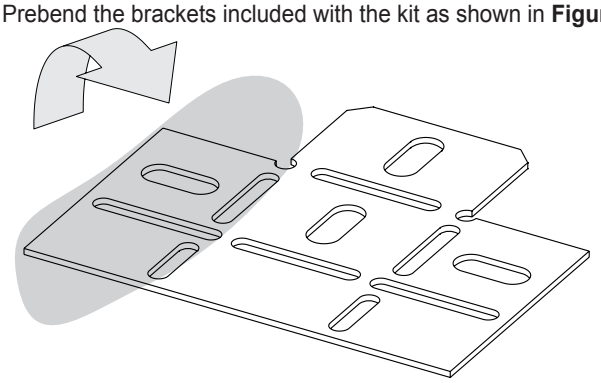

**Figure 3**

2. **For Ceramic Fiber Liners Only:** Place left and right rear legs as shown in **Figure 4.**

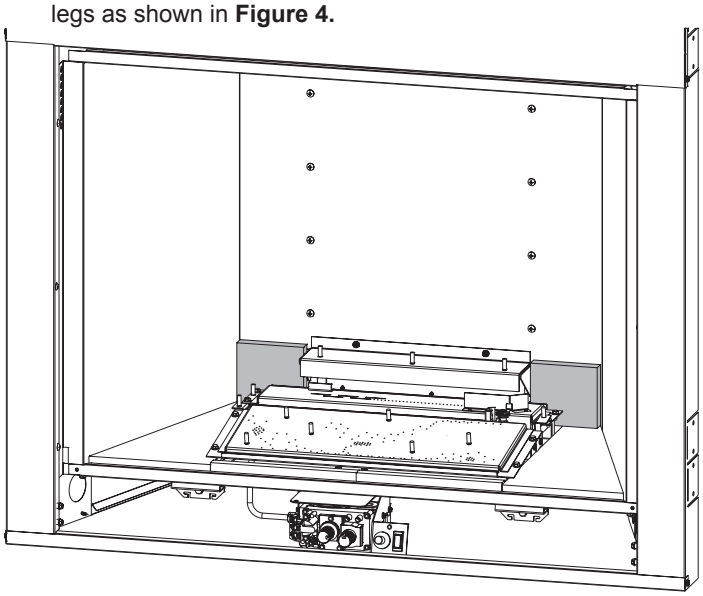

**Figure 4**

3. Place rear panel on the back of the firebox and hold with one hand. **See Figure 5.** Ensure rear panel is resting on fiber legs. **Note for Reflective Liners Only:** Place insulation behind rear liner before installing.

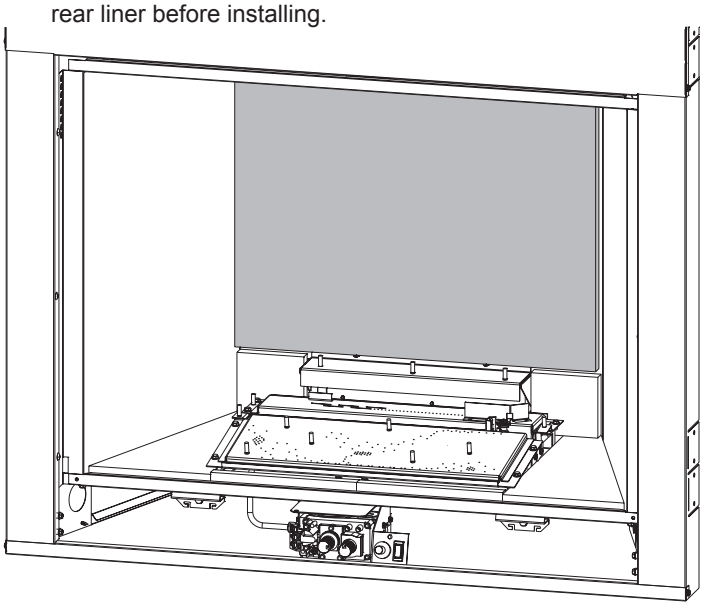

**Figure 5**

4. Remove the screw plugging the bracket hole in the top of the firebox.
5. Place left panel against left firebox and rear panel and hold side in place. Secure panel in place with one of the brackets and one #10 x 1/2 screw. **See Figure 6.**

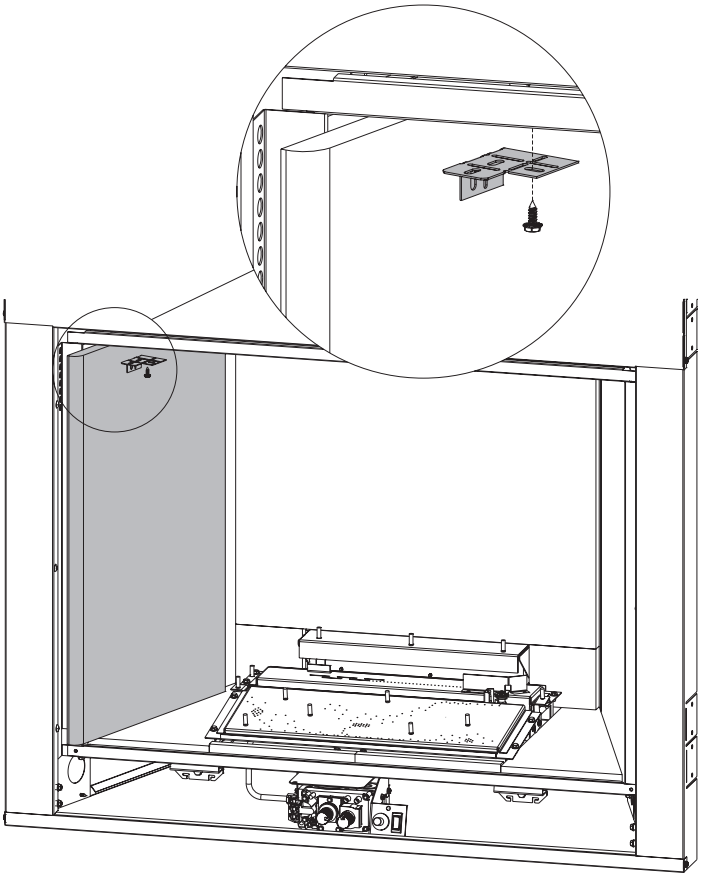

**Figure 6**

**NOTE:** The side liners each have a small dimple to indicate the bottom rear of the liner. When properly installed, the dimples will be at the bottom rear of the fireplace.

6. Repeat steps 4 and 5 for the right side.

# BLACK REFLECTIVE LINERS AND FLOORS EXPLODED VIEW AND PARTS LIST

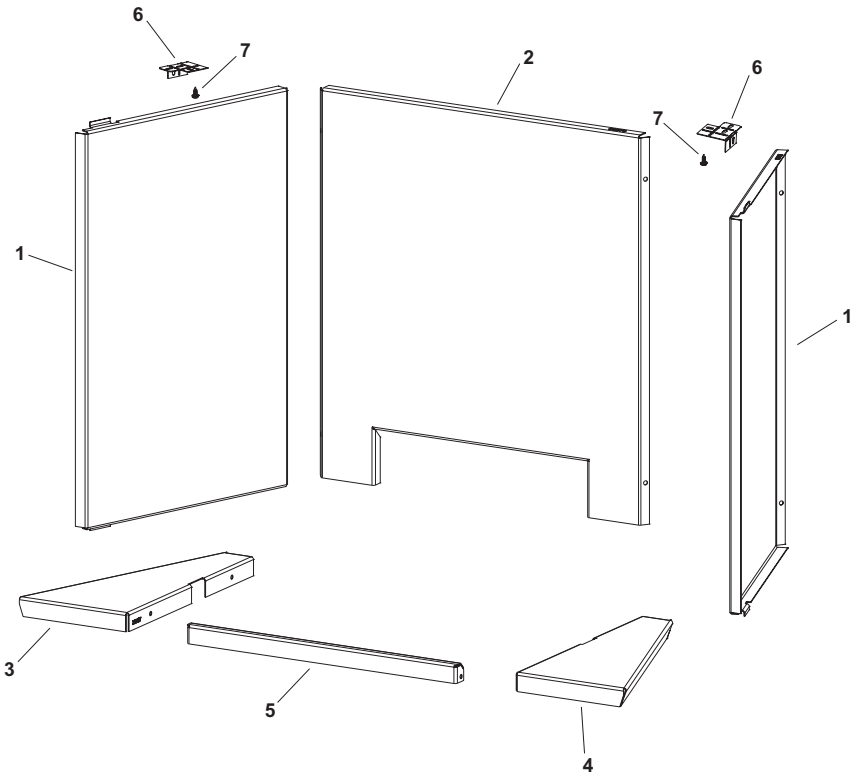


| INDEX NO. | PART NUMBER | | | | DESCRIPTION | QTY SUPPLIED |
|---|---|---|---|---|---|---|
| | DVP36XKR | DVP42XKR | DVF36XKR | DVF42XKR | | |
| 1 | 33973 | 33973 | - | - | SIDE LINER | 1 |
| 2 | 33972 | 33978 | - | - | REAR LINER | 1 |
| 3 | - | - | 33975 | 33979 | BOTTOM LEFT LINER | 1 |
| 4 | - | - | 33976 | 33980 | BOTTOM RIGHT LINER | 1 |
| 5 | - | - | 33977 | 33977 | BOTTOM CENTER LINER | 1 |
| 6 | 29270 | 29270 | - | - | LINER BRACKET | 2 |
| 7 | R2737 | R2737 | - | - | SCREWS #10 X 1/2 | 2 |
| Not Shown | R11994 | R11995 | - | - | REAR LINER INSULATION | 1 |

# CERAMIC FIBER LINERS AND FLOORS EXPLODED VIEW AND PARTS LIST

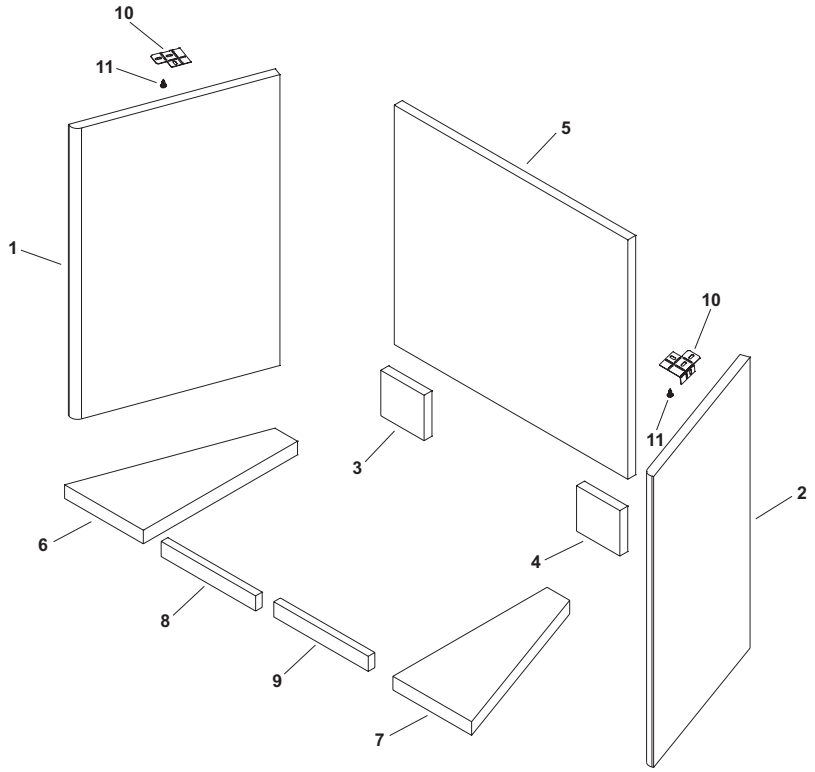


| CERAMIC FIBER LINERS - WITHOUT FLOORS | | | | | | | |
|---|---|---|---|---|---|---|---|
| INDEX NO. | PART NUMBER | | | | | DESCRIPTION | QTY SUPPLIED |
| | DVP36XCB | DVP42XCB | DVP36XRB | DVP42XRB | DVP42XRBW | | |
| 1 | 34069 | 34069 | 34064 | 34064 | 37875 | LEFT SIDE LINER | 1 |
| 2 | 34070 | 34070 | 34065 | 34065 | 37876 | RIGHT SIDE LINER | 1 |
| 3 | 34071 | 34071 | 34077 | 34074 | 37878 | LEFT LEG LINER | 1 |
| 4 | 34072 | 34072 | 34078 | 34075 | 37879 | RIGHT LEG LINER | 1 |
| 5 | 34068 | 34076 | 34063 | 34073 | 37877 | REAR LINER | 1 |
| 10 | 29270 | 29270 | 29270 | 29270 | 29270 | LINER BRACKET | 2 |
| 11 | R2737 | R2737 | R2737 | R2737 | R2737 | SCREWS #10 X 1/2 | 2 |

| CERAMIC FIBER LINERS - WITH FLOORS | | | | | | |
|---|---|---|---|---|---|---|
| INDEX NO. | PART NUMBER | | | | DESCRIPTION | QTY SUPPLIED |
| | DVP36XTS | DVP42XTS | DVF36XWS | DVF42XWS | | |
| 1 | 34087 | 34087 | 34080 | 34080 | LEFT SIDE LINER | 1 |
| 2 | 34088 | 34088 | 34081 | 34081 | RIGHT SIDE LINER | 1 |
| 3 | 34089 | 34099 | 34082 | 34094 | LEFT LEG LINER | 1 |
| 4 | 34090 | 34100 | 34083 | 34095 | RIGHT LEG LINER | 1 |
| 5 | 34086 | 34098 | 34079 | 34093 | REAR LINER | 1 |
| 6 | 34091 | 34101 | 34084 | 34069 | LEFT BOTTOM LINER | 1 |
| 7 | 34092 | 34102 | 34085 | 34070 | RIGHT BOTTOM LINER | 1 |
| 8 | 34105 | 34105 | 34103 | 34103 | LEFT CENTER BOTTOM LINER | 1 |
| 9 | 34106 | 34106 | 34104 | 34104 | RIGHT CENTER BOTTOM LINER | 1 |
| 10 | 29270 | 29270 | 29270 | 29270 | LINER BRACKET | 2 |
| 11 | R2737 | R2737 | R2737 | R2737 | SCREWS #10 X 1/2 | 2 |