This Owner's Manual is provided and hosted by Appliance Factory Parts.

Appliance Factory Parts
Experts in BBQ, Humidifier, & Appliance Parts
1-800-955-7075

# White Mountain Hearth DVL25FP32N-2 Owner's Manual

Shop genuine replacement parts for White Mountain Hearth DVL25FP32N-2

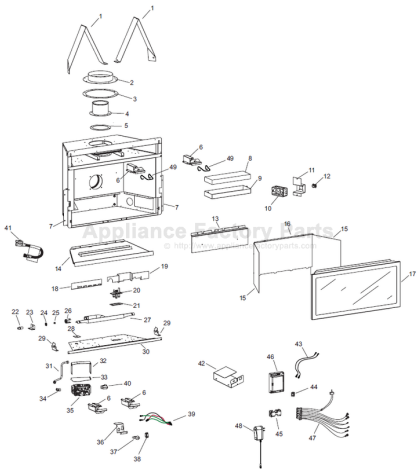

Find Your White Mountain Hearth Fireplace Parts - Select From 539 Models

-------- Manual continues below --------

EMPIRE
COMFORT SYSTEMS
SINCE 1932

# INSTALLATION INSTRUCTIONS AND OWNER'S MANUAL

**INSTALLER: Leave this manual with the appliance.**
**CONSUMER: Retain this manual for future reference.**

**⚠ WARNING: If not installed, operated and maintained in accordance with the manufacturer's instructions, this product could expose you to substances in fuel or from fuel combustion which can cause death or serious illness.**

**⚠ WARNING**

**FIRE OR EXPLOSION HAZARD**
**Failure to follow safety warnings exactly could result in serious injury, death or property damage.**

- **Do not store or use gasoline or other flammable vapors and liquids in the vicinity of this or any other appliance.**
- **WHAT TO DO IF YOU SMELL GAS**
  - **Do not try to light any appliance.**
  - **Do not touch any electrical switch; do not use any phone in your building.**
  - **Leave the building immediately.**
  - **Immediately call your gas supplier from a neighbor's phone. Follow the gas supplier's instructions.**
  - **If you cannot reach your gas supplier, call the fire department.**
- **Installation and service must be performed by a qualified installer, service agency or the gas supplier.**

## DIRECT VENT GAS FIREPLACE

## MODEL SERIES:

GAS-FIRED
C UL US
LISTED

**DVL25FP32(N,P)-2**
**DVL33FP32(N,P)-2**
**DVL25FP72(N,P)-2**
**DVL33FP72(N,P)-2**

**UL FILE NO. MH45034**

***LOFT FIREPLACE***

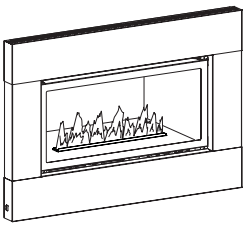

**This appliance may be installed in an aftermarket, permanently located, manufactured home (USA only) or mobile home, where not prohibited by state or local codes.**

**This appliance is only for use with the type of gas indicated on the rating plate. This appliance is not convertible for use with other gases, unless a certified kit is used.**

# ⚠ WARNING

**HOT GLASS** WILL CAUSE BURNS.
**DO NOT TOUCH** GLASS UNTIL COOLED.
**NEVER** ALLOW CHILDREN TO TOUCH GLASS.

A barrier designed to reduce the risk of burns from the hot viewing glass is provided with this appliance and shall be installed for the protection of children and other at-risk individuals.

NATIONAL FIREPLACE INSTITUTE®
NFI
CERTIFIED
www.nficertified.org

We suggest that our gas hearth products be installed and serviced by professionals who are certified in the U.S. by the National Fireplace Institute® (NFI) as NFI Gas Specialists.

# TABLE OF CONTENTS


| SECTION | PAGE |
|---|---|
| Important Safety Information | 3 |
| Safety Information for Users of LP Gas | 4 |
| Introduction | 5 |
| Specifications | 6 |
| Fireplace Dimensions | 7 |
| Clearances | 8 |
| Locating Fireplace | 9 |
| Gas Supply | 10 |
| Installation | 11 - 13 |
| Vent Systems | 14 |
| Vertical Termination | 15 |
| Venting Fireplace - Top | 16 - 18 |
| Examples - Top Vent Run | 19 |
| Termination Clearances | 20 |
| Vent Clearances | 21 |
| Vent System Identification | 22 |
| Framing and Finishing | 23 - 24 |
| Horizontal Termination | 25 |
| Vertical Termination | 26 - 27 |
| Alternate On/Off Switch Installation | 28 |
| Surround Panel Installation | 29 |
| Optional Blower Accessory Information | 30 |
| Optional Decorative Glass Placement | 31 |
| Operating Instructions | 32 |
| Standing Pilot Lighting Instructions | 33 |
| Standing Pilot Wiring | 34 |
| Standing Pilot Troubleshooting | 35 |
| IPI Electronic System Operating Instructions | 36 |
| IPI Electronic System Wiring Diagram | 37 |
| Intermittent Pilot Lighting Instructions | 38 |
| Intermittent Pilot Control System Troubleshooting | 39 - 41 |
| Maintenance and Service | 42 |
| Accessories | 43 |
| Parts View | 44 |
| Parts List | 44 - 45 |
| Master Parts Distributor List | 46 |
| How To Order Repair Parts | 46 |
| Appliance Service History | 47 |
| Warranty Terms | 48 |

# IMPORTANT SAFETY INFORMATION

**Before enclosing the vent pipe assembly, operate the appliance to ensure it is venting properly.**

DO NOT OPERATE THIS APPLIANCE WITHOUT GLASS FRONT PANEL INSTALLED

⚠ **DANGER**: Indicates a hazardous situation which, if not avoided, will result in death or serious injury.

⚠ **WARNING**: Indicates a hazardous situation which, if not avoided, could result in death or serious injury.

⚠ **CAUTION**: Indicates a hazardous situation which, if not avoided, could result in minor or moderate injury.
***NOTICE***: Addresses practices not related to personal injury.

- **Children and adults should be alerted to the hazards of high surface temperatures and should stay away to avoid burns or clothing ignition.**
- **Young children should be carefully supervised when they are in the same room as the appliance.**
- **Clothing or other flammable material should not be placed on or near the appliance.**
- **Adequate accessibility clearances for servicing and proper operation should be maintained.**
- **This appliance must not share or be connected to a flue serving a separate solid-fuel burning appliance.**
- **Keep the area around your appliance clear of combustible materials, gasoline and other flammable vapor and liquids.**
- **Under no circumstances should any solid fuels (wood, coal, paper or cardboard etc.) be used in this appliance.**
- **The flow of combustion and ventilation air must not be obstructed in any way.**
- **Young children should be carefully supervised when they are in the same room as the appliance. Toddlers, young children, and others may be susceptible to accidental contact burns. A physical barrier is recommended if there are at-risk individuals in the house. To restrict access to a fireplace or stove, install an adjustable safety gate to keep toddlers young children, and other at-risk individuals out of the room and away from hot surfaces.**
- **A barrier designed to reduce the risk of burns from the hot viewing glass is provided with this appliance and shall be installed for the protection of children and other at-risk individuals.**
- **If the barrier becomes damaged, the barrier shall be replaced with the manufacturer's barrier for this appliance.**
- **Any safety screen, guard, or barrier removed for servicing an appliance must be replaced prior to operating the appliance.**

- **Due to high temperatures the appliance should be located out of traffic and away from furniture and draperies.**
- **The glass front or any part removed for servicing the appliance must be replaced prior to operating the appliance. Work should be done by a qualified service person.**
- **Keep burner and control compartment clean.**
- **Vent cap is hot while fireplace is in operation.**
- **Installation and repair should be done by a QUALIFIED SERVICE PERSON. The appliance should be inspected before use and at least annually by a qualified service person. More frequent cleaning may be required due to excessive lint from carpeting, bedding materials, etc. It is imperative that control compartments, burners and circulating air passageways of the appliance be kept clean.**
- **DO NOT put anything around the fireplace that will obstruct the flow of ventilation air.**
- **Maintain clearances in accordance with local installation codes and the requirements of the gas supplier.**
- **DO keep the appliance area clear and free from combustible material, gasoline and other flammable vapors and liquids.**
- **DO examine venting system periodically and replace damaged parts.**
- **DO make a periodic visual check of pilot and burners. Clean and replace damaged parts.**
- ⚠ **CAUTION: The glass used in your fireplace insert is ceramic glass. If the glass is cracked or damaged in any way, it should be replaced only with a complete glass frame assembly from Empire. See parts list on Page 40 for ordering.**
- **DO NOT use this fireplace insert if any part has been under water. Immediately call a qualified service technician to inspect the heater and to replace any part of the control system and any gas control which has been under water.**
- **Any safety screen or guard removed for servicing an appliance must be replaced prior to operating the appliance.**

# SAFETY INFORMATION FOR USERS OF LP GAS

**Propane (LP-Gas) is a flammable gas which can cause fires and explosions. In its natural state, propane is odorless and colorless. You may not know all the following safety precautions which can protect both you and your family from an accident. Read them carefully now, then review them point by point with the members of your household. Someday when there may not be a minute to lose, everyone's safety will depend on knowing exactly what to do. If, after reading the following information, you feel you still need more information, please contact your gas supplier.**

## LP-GAS WARNING ODOR

**If a gas leak happens, you should be able to smell the gas because of the odorant put in the LP-Gas. That's your signal to go into immediate action!**

- Do not operate electric switches, light matches, use your phone. Do not do anything that could ignite the gas.
- Get everyone out of the building, vehicle, trailer, or area. Do that IMMEDIATELY.
- Close all gas tank or cylinder supply valves.
- LP-Gas is heavier than air and may settle in low areas such as basements. When you have reason to suspect a gas leak, keep out of basements and other low areas. Stay out until firefighters declare them to be safe.
- Use your neighbor's phone and call a trained LP-Gas service person and the fire department. Even though you may not continue to smell gas, do not turn on the gas again. Do not re-enter the building, vehicle, trailer, or area.
- **Finally**, let the service man and firefighters check for escaped gas. Have them air out the area before you return. Properly trained LP-Gas service people should repair the leak, then check and relight the gas appliance for you.

## NO ODOR DETECTED - ODOR FADE

**Some people cannot smell well. Some people cannot smell the odor of the chemical put into the gas. You must find out if you can smell the odorant in propane.** Smoking can decrease your ability to smell. Being around an odor for a time can affect your sensitivity or ability to detect that odor. Sometimes other odors in the area mask the gas odor. People may not smell the gas odor or their minds are on something else. Thinking about smelling a gas odor can make it easier to smell.

**The odorant in LP-Gas is colorless, and it can fade under some circumstances.** For example, if there is an underground leak, the movement of the gas through soil can filter the odorant. Odorants in LP-Gas also are subject to oxidation. This fading can occur if there is rust inside the storage tank or in iron gas pipes.

The odorant in escaped gas can adsorb or absorb onto or into walls, masonry and other materials and fabrics in a room. That will take some of the odorant out of the gas, reducing its odor intensity.

LP-Gas may stratify in a closed area, and the odor intensity could vary at different levels. Since it is heavier than air, there may be more odor at lower levels. Always be sensitive to the slightest gas odor. If you detect any odor, treat it as a serious leak. Immediately go into action as instructed earlier.

## SOME POINTS TO REMEMBER

- **Learn to recognize the odor of LP-Gas.** Your local LP-Gas Dealer can give you a "Scratch and Sniff" pamphlet. Use it to find out what the propane odor smells like. If you suspect that your LP-Gas has a weak or abnormal odor, call your LP-Gas Dealer.
- If you are not qualified, do not light pilot lights, perform service, or make adjustments to appliances on the LP-Gas system. If you are qualified, consciously think about the odor of LP-Gas prior to and while lighting pilot lights or performing service or making adjustments.
- Sometimes a basement or a closed-up house has a musty smell that can cover up the LP-Gas odor. Do not try to light pilot lights, perform service, or make adjustments in an area where the conditions are such that you may not detect the odor if there has been a leak of LP-Gas.
- Odor fade, due to oxidation by rust or adsorption on walls of new cylinders and tanks, is possible. Therefore, people should be particularly alert and careful when new tanks or cylinders are placed in service. Odor fade can occur in new tanks, or reinstalled old tanks, if they are filled and allowed to set too long before refilling. Cylinders and tanks which have been out of service for a time may develop internal rust which will cause odor fade. If such conditions are suspected to exist, a periodic sniff test of the gas is advisable. **If you have any question about the gas odor, call your LP-Gas dealer. A periodic sniff test of the LP-Gas is a good safety measure under any condition.**
- If, at any time, you do not smell the LP-Gas odorant and you think you should, assume you have a leak. Then take the same immediate action recommended above for the occasion when you do detect the odorized LP-Gas.
- If you experience a complete "gas out," (the container is under no vapor pressure), turn the tank valve off immediately. If the container valve is left on, the container may draw in some air through openings such as pilot light orifices. If this occurs, some new internal rusting could occur. If the valve is left open, then treat the container as a new tank. Always be sure your container is under vapor pressure by turning it off at the container before it goes completely empty or having it refilled before it is completely empty.

# INTRODUCTION

**Instructions to Installer**

1. Installer must leave instruction manual with owner after installation.
2. Installer must have owner fill out and mail warranty card supplied with the fireplace.
3. Installer should show owner how to start and operate the fireplace.

This direct vent gas fireplace is designed to operate with all combustion air being siphoned from the outside of the building and all exhaust gases expelled to the outside of the building. The information contained in this manual pertains to all models and gas control systems unless otherwise noted.

**⚠ WARNING**

**This unit is not for use with solid fuels**

**Appliance Certification**

This fireplace is design certified in accordance with American National Standard/CSA Standard ANSI Z.21-50/CSA 2.22 and by Underwriters Laboratories as a Direct Vent Gas Fireplace and shall be installed according to these instructions.

Consult your local building code agency, prior to installation, to ensure compliance with local codes-including permits and inspections.

The fireplace, when installed, must be electrically grounded in accordance with local codes or, in absence of local codes, with the *National Electric Code ANSI/NFPA 70* or Canadian Electric code, CSA C22.1, if an external electrical source is utilized.

These models may be installed in a bedroom or bed-sitting room in the U.S.A. and Canada.

**Qualified Installing Agency**

Installation and replacement of gas piping, gas utilization equipment or accessories and repair and servicing of equipment shall be performed only by a qualified agency. The term “qualified agency” means any individual, firm, corporation or company which either in person or through a representative is engaged in and is responsible for (a) the installation or replacement of gas piping or (b) the connection, installation, repair or servicing of equipment, who is experienced in such work, familiar with all precautions required and has complied with all the requirements of the authority having jurisdiction.

State of Massachusetts: The installation must be made by a licensed plumber or gas fitter in the Commonwealth of Massachusetts.

The installation must conform with local codes or, in the absence of local codes, with the *National Fuel Gas Code ANSI Z223.1/NFPA 54* Natural Gas and Propane Installation Code, or CSA B149.1 in Canada. *Available from the American National Standards Institute, Inc. 11 West 42nd St., New York, N.Y. 10036.*

**⚠ WARNING**

**ANY CHANGE TO THIS FIREPLACE OR ITS CONTROLS CAN BE DANGEROUS.**
**Improper installation or use of the fireplace can cause serious injury or death from fire, burns, explosions, or carbon monoxide poisoning**

**Any alteration of the original design, installed other than as shown in these instructions or use with a type of gas not shown on the rating plate is the responsibility of the person and company making the change.**

**Important**

All correspondence should refer to complete Model Number, Serial Number and type of gas.

**High Altitude**

When installing this unit at an elevation above 2000 feet (in the United States) it may be necessary to decrease the input rating by changing the existing burner orifice to a smaller size. Generally, input should be reduced 4 percent for each 1000 feet above sea level. However, if the heating value of the gas has been reduced, this general rule may not apply. Check with local gas utility for proper orifice size identification.

**Canadian High Altitude**

Altitude: 0-4500 feet (0-1370 m)

When installing this unit at an elevation above 4500 feet (in Canada), check with local authorities.

Consult your local gas utility for assistance in determining the proper orifice for location.

**Preparation**

This direct vent gas fireplace and its components are tested and safe when installed in accordance with this Installation Manual. Report to your dealer any parts damaged in shipment, specifically check glass condition. Do not install unit with damaged, incomplete, or substitute parts. Read all instructions before starting installation and follow these instructions carefully during installation to insure maximum benefit and safety. Failure to follow them will void your warranty and may present a fire hazard.

The warranty will be voided by, and the warranter disclaims any responsibility for the following actions:

- Installation of any damaged fireplace or vent system component.
- Modification of the fireplace or direct vent system.
- Installation other than as instructed by Empire Comfort Systems, Inc.
- Improper positioning of the optional decorative glass or glass door assembly.
- Installation and/or use of any component part not manufactured or approved by manufacturer.

**NOTICE: Prior to operating this unit, be sure to clean the interior porcelain coated liner panels and glass door with a soft clean cloth. Due to normal manufacturing processes, fingerprints along with excess sealing materials may be present and should be removed. When cleaning, do not use abrasives on the porcelain liners or the glass door assembly.**

# SPECIFICATIONS

| DVL25FP(3,7)2L MODELS | LP | Nat |
|---|---|---|
| Input Btu/hr Maximum | 19,000 | 18,000 |
| Btu/hr Minimum | 15,000 | 13,000 |
| KWH (Maximum) | 5.6 | 5.3 |
| (Minimum) | 4.5 | 3.9 |
| Orifice | #55 (.052) | 2.10mm |
| Air Shutter Opening | 1/4” | CLOSED |
| | | |
| **DVL33FP(3,7)2L MODELS** | **LP** | **Nat** |
| Input Btu/hr Maximum | 23,000 | 23,000 |
| Btu/hr Minimum | 18,000 | 16,000 |
| KWH (Maximum) | 6.67 | 6.67 |
| (Minimum) | 5.3 | 4.7 |
| Orifice | 1.45mm | #42 (.0935) |
| Air Shutter Opening | FULL OPEN | 1/8” |

NOTE: Air shutter settings are factory minimum settings. Some venting configurations may require minor air shutter adjustments for optimum performance.

| Remote Control Options & Accessories | Description |
|---|---|
| FRBC | Millivolt Battery Remote ON/OFF |
| FWS-1 | Millivolt Wall Switch |

| Venting Options | Description |
|---|---|
| DVVK-4TSP | Top vent kit (horizontal) - 4 1/2” to 6” (114.3mm to 152mm) wall thickness |
| DVVK-4TP | Top vent kit (horizontal - 8” to 12” (203mm to 305 mm) wall thickness |
| DVVK-4VP | Vertical vent kit |
| DVVK-4FRE | Horizontal flex vent kit (round cap) |
| DVVK-4RE | Horizontal round termination (wall thickness up to 11 7/16”) |
| DV822 | Vinyl siding kit for DVVK-4RE |
| DVVK-4F | Horizontal flex vent kit |
| DVVK-4FREVS | Horizontal flex vent kit for vinyl siding applications |

| Barrier Surround Kits | Description |
|---|---|
| **4 Sided Contemporary - Stainless Steel Top & Bottom, Black Sides** | |
| DFQ25M4BLSS | Stainless Steel, Black, for use on DVL25FP models |
| DFQ33M4BLSS | Stainless Steel, Black for use on DVL33FP models |
| **4 Sided Traditional Black** | |
| DFQ25M4BL | Black for use on DVL25FP models |
| DFQ33M4BL | Black for use on DVL33FP models |

| Surround | Description |
|---|---|
| **Surrounds for use with Decorative Fronts** | |
| DS2566BL | Decorative Metal Frame for Fireplace, 4-sided, 1 piece<br>For use on DVL25FP Models |
| DS3366BL | Decorative Metal Frame for Fireplace, 4-sided, 1 piece<br>For use on DVL33FP Models |

For additional information on decorative accessories, refer to page 43.

| FIREPLACE BARRIER SCREENS | | |
|---|---|---|
| **SCREEN MODEL** | **DESCRIPTION** | **MODELS USED ON** |
| DFB25R(BL,HP,SS) | Eclipse Barrier Front, Matte Black, Hammered Pewter, Stainless Steel | DVL25FP |
| DFB33R(BL,HP,SS) | Eclipse Barrier Front, Matte Black, Hammered Pewter, Stainless Steel | DVL33FP |
| DFQ25M4(BL,BLSS) | Barrier Surround - Black, Stainless Steel | DVL25FP |
| DFQ33M4(BL,BLSS) | Barrier Surround - Black, Stainless Steel | DVL33FP |

Note: A firescreen is required for operation of the appliance, but are sold separately. Follow the instructions that come with your firescreen for proper installation.

# FIREPLACE DIMENSIONS

When planning a fireplace installation, it's necessary to determine:

- The vent system configuration to be used.
- Gas supply piping.
- Whether optional accessories - devices such as a wall switch, blower or remote control - are desired.
- Electrical supply requirements for optional blower.
- Properly framed opening size required for installation of the fireplace.

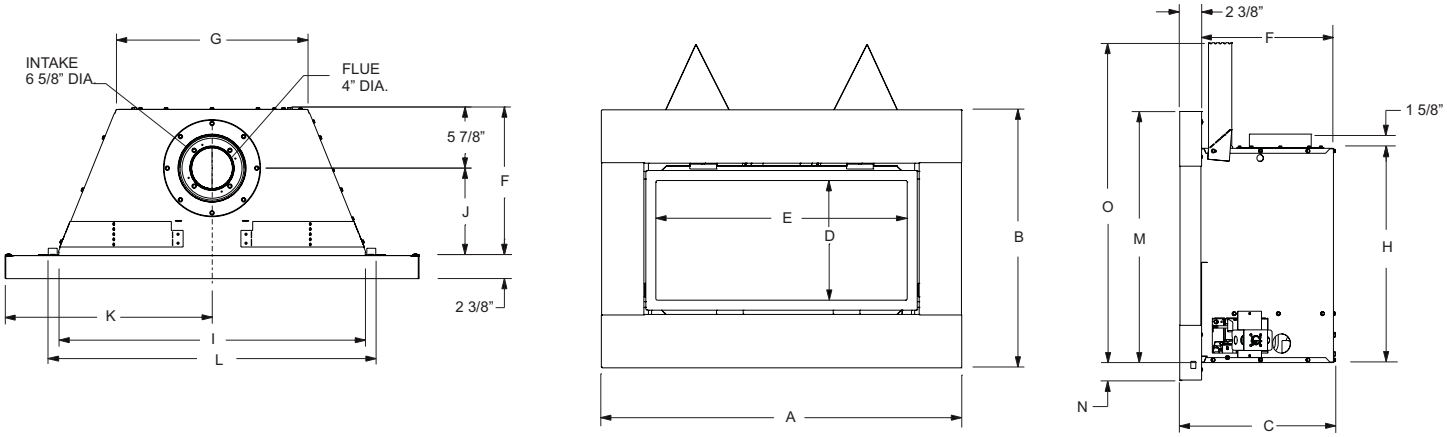


Note: Dimensions shown with DF(25,33)M4 series surrounds.

| DV FIREPLACE DIMENSIONS | | | | | | | | | | | | | | | |
|---|---|---|---|---|---|---|---|---|---|---|---|---|---|---|---|
| MODEL | A | B | C | D | E | F | G | H | I | J | K | L | M | N | O |
| DVL25FP | 37 1/2" | 26" | 14 1/4" | 10 7/16" | 25 1/4" | 12 7/8" | 17" | 20 1/8" | 27" | 6 7/8" | 18 3/4" | 29" | 24 3/16" | 2" | 31 3/8" |
| DVL33FP | 40 1/2" | 29" | 16 3/4" | 13 7/16" | 28 1/4" | 14 3/8" | 18 7/8" | 23 1/8 | 30" | 8 1/2" | 20 1/4" | 32" | 27 3/16" | 2" | 34 3/8" |

**Figure 1**

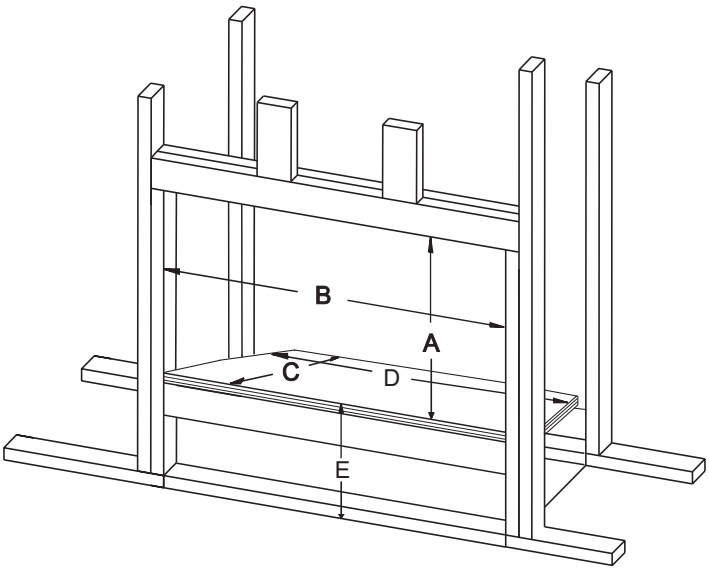


| MINIMUM COMBUSTIBLE FRAMING DIMENSIONS | | | | | |
|---|---|---|---|---|---|
| MODEL NO. | A | B | C | D | E |
| DVL25FP | 32 1/4" | 29" | 15 7/8" | 21" | 4" MINIMUM |
| DVL33FP | 35 1/4" | 32" | 17 3/8" | 22 3/4" | 4" MINIMUM |

**Figure 2**

# CLEARANCES

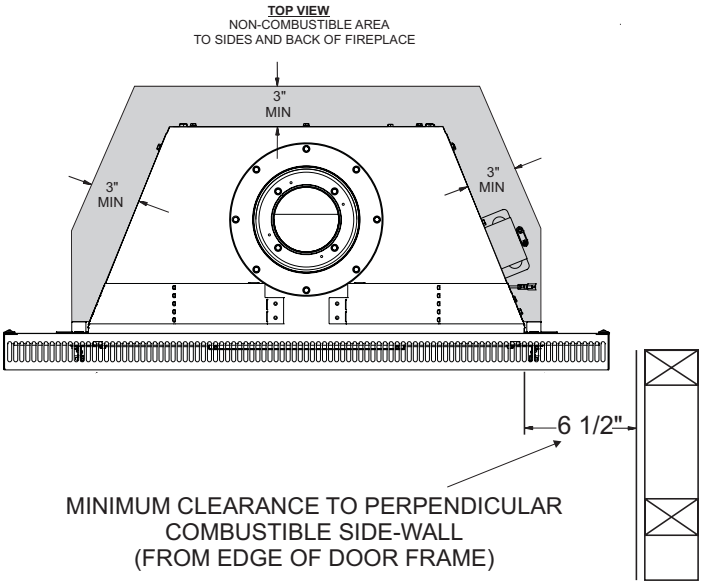


**Figure 3**

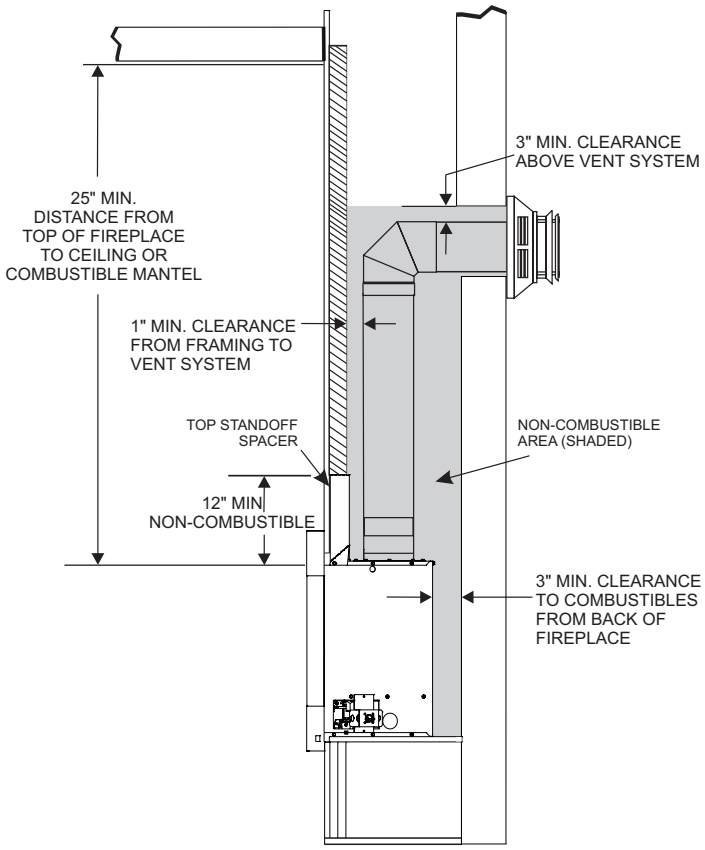


**Figure 4**

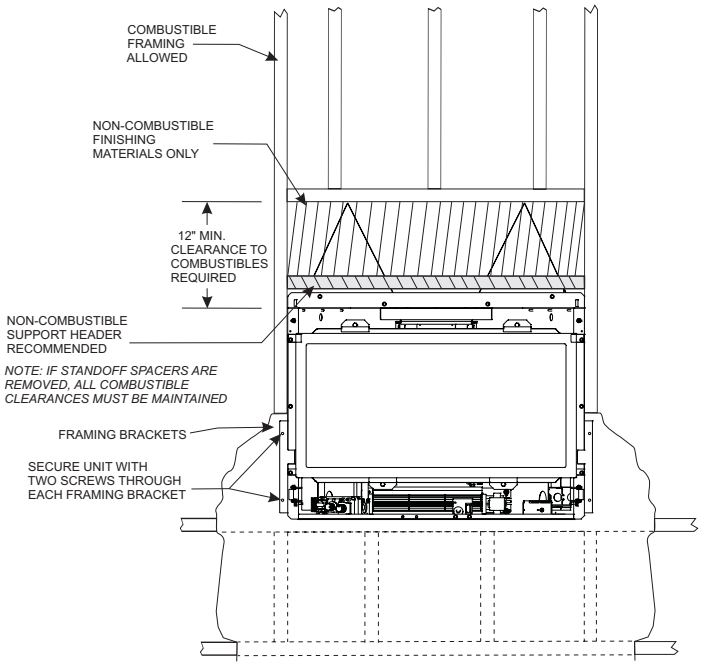


Note: Framing brackets can be attached to sides of fireplace in one of two positions. Screw the framing brackets to the front set of pilot holes if securing brackets over finished wall materials. Or, attach the framing brackets to the rearward set of pilot holes when securing unit to framed opening. See Figure 9.

**Figure 5**

**Combustible Material**
No greeting cards, stockings or ornamentation of any type should be placed on or attached to the fireplace. The flow of heat can ignite combustibles.

The non-combustible support header recommended in Figure 5 could be a metal stud that is tied in horizontally above the unit. This optional header may take the place of the two top standoff spacers. If the standoff spacers are not used, the combustible above the fireplace must still remain at the minumum combustible clearance opening heights as indicated by Figure 2, page 7.

**Mantel Clearance**
The minimum clearance to a combustible mantle is 25” from the top of the fireplace top as illustrated in Figure 4.

# LOCATING FIREPLACE

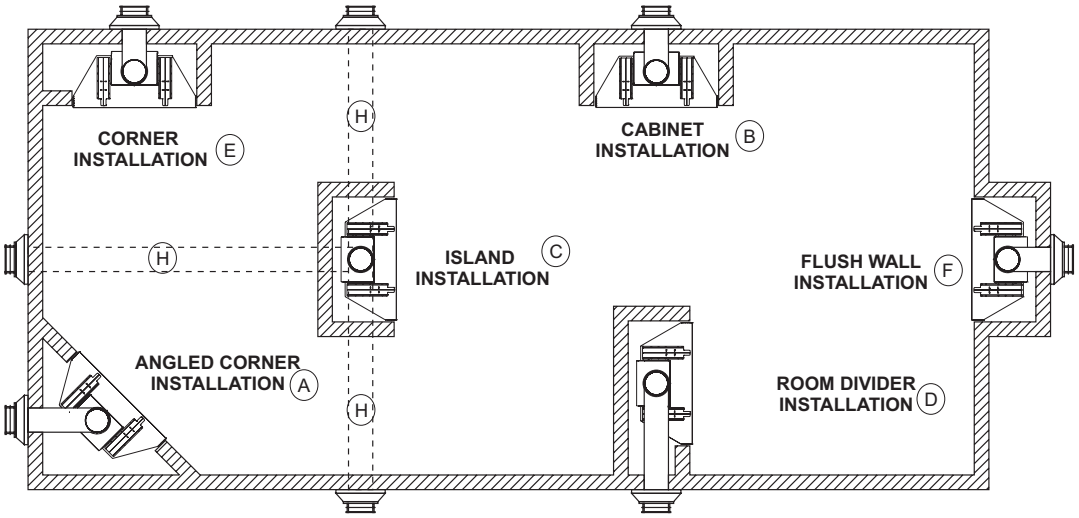


Note: Island (C) and Room Divider (D) installation is possible as long as the horizontal portion of the vent system (H) does not exceed 20 feet with a minimum vertical run of 8 feet. See details in Venting Section.

When you install your Direct Vent Fireplace in (D) Room divider or (E) Flat on wall corner positions, a minimum of 6 inches clearance must be maintained from the perpendicular wall and the front edge of the appliance.

**Figure 6**

# GAS SUPPLY

The gas pipeline can be brought in through the right or left side of the appliance. The fireplace has a Flexline with shutoff valve attached to the right side of the valve when facing the unit. **See Figures 7 and 8.** Consult the current National Fuel Gas Code, ANSI Z223.1 CAN/CGA-B149 (.1 or .2) installation code.

| Recommended Gas Pipe Diameter | | | | |
|---|---|---|---|---|
| **Pipe Length** | **Schedule 40 Pipe Inside Diameter** | | **Tubing, Type L Outside Diameter** | |
| | Nat. | L.P. | Nat. | L.P. |
| 0-10ft<br>0-3m | 1/2"<br>12.7mm | 3/8"<br>9.5mm | 1/2"<br>12.7mm | 3/8"<br>9.5mm |
| 11-40ft<br>4-12m | 1/2"<br>12.7mm | 1/2"<br>12.7mm | 5/8"<br>15.9mm | 1/2"<br>12.7mm |
| 41-100ft<br>13-30m | 1/2"<br>12.7mm | 1/2"<br>12.7mm | 3/4"<br>19mm | 1/2"<br>12.7mm |
| 101-150ft<br>31-46m | 3/4"<br>19mm | 1/2"<br>12.7mm | 7/8"<br>22.2mm | 3/4"<br>1.9 mm |

***NOTICE*:** Never use plastic pipe. Check to confirm whether your local codes allow copper tubing or galvanized.
***NOTICE*:** Since some municipalities have additional local codes, it is always best to consult your local authority and installation code.

The use of the following gas connectors is recommended:

— ANS Z21.24 Appliance Connectors of Corrugated Metal Tubing and Fittings.

— ANS Z21.45 Assembled Flexible Appliance Connectors of Other Than All-Metal Construction

The above connectors may be used if acceptable by the authority having jurisdiction. The state of Massachusetts requires that a flexible appliance connector cannot exceed three feet in length.

FLEXIBLE GAS LINE CONNECTION

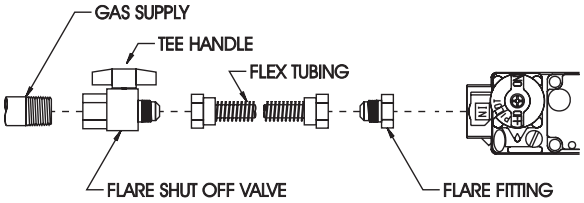


**Figure 7**

| | Gas Supply Pressure (inches w.c.) | | |
|---|---|---|---|
| | Minimum | Normal | Maximum |
| Natural Gas | 4.5" | 7.0" | 14.0" |
| LP (Propane) | 10.8" | 11.0" | 14.0" |
| | Manifold Pressure (inches w.c.) | | |
| | Normal (HI) | | |
| Natural Gas | 3.5" | | |
| LP (Propane) | 10.0" | | |

**Installing the Main Gas Cock**
Each appliance should have its own manual gas cock.
A manual main gas cock should be located in the vicinity of the unit. Where none exists, or where its size or location is not adequate, contact your local authorized installer for installation or relocation. Compounds used on threaded joints of gas piping shall be resistant to the action of liquefied petroleum gases. The gas lines must be checked for leaks by the installer. This should be done with a soap solution watching for bubbles on all exposed connections, and if unexposed, a pressure test should be made.

**Never use an exposed flame to check for leaks. Appliance must be disconnected from piping at inlet of control valve and pipe capped or plugged for pressure test. Never pressure test with appliance connected; control valve will sustain damage!**

***NOTICE*:** The millivolt gas controls are equipped with a captured screw type pressure test point, therefore it is not necessary to provide a 1/8" test point up stream of the control.

When using copper or flex connector use only approved fittings.
The appliance and it's individual shut off valve must be disconnected from supply piping system during any pressure testing of that system at test pressures in excess of 1/2 psig (3.5kPa).
The appliance must be isolated from the gas supply piping system by closing its individual manual shut off valve during any pressure testing of the gas supply piping system at test pressures equal to or less than 1/2 psig (3.5kPa).
**Attention!** If one of the procedures results in pressures in excess of 1/2 psig (14" w.c.) (3.5 kPa) on the fireplace gas valve, it will result in a hazardous condition.

**Checking Manifold Pressures**
Both Propane and Natural gas valves have a built-in pressure regulator in the gas valve. Natural gas models will have a manifold pressure of approximately 3.5" w.c. (.871kPa) at the valve outlet with the inlet pressure to the valve from a minimum of 4.5" w.c. (1.120kPa) for the purpose of input adjustment to a maximum of 14.0" w.c. (3.484kPa). Propane gas models will have a manifold pressure approximately 10.0" w.c. (2.49kPa) at the valve outlet with the inlet pressure to the valve from a minimum of 10.8" w.c. (2.68kPa) for the purpose of input adjustment to a maximum of 14.0" w.c. (3.484kPa).

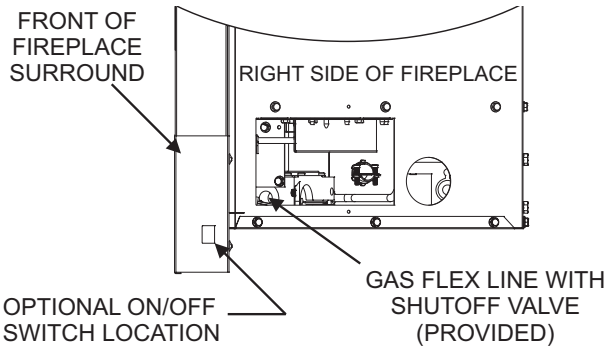


**Figure 8**

# INSTALLATION

To begin, remove the glass door by releasing the 2 spring latches at the top, and 2 spring latches at the bottom of the door frame. Check to make sure there is no hidden damage to the unit. Take a moment to plan out the gas, venting and electrical route. It is best to start with the gas line first, followed by the vent system and electrical supply requirements.

Attention: If installing the optional FBB8 Blower Kit, it is recommended that it be installed in the fireplace before completing installation of the fireplace.

This fireplace requires no hearth extension. Combustible material on the floor may be installed up to the fireplace.

Install the fireplace without the Surround panels attached and make all gas, venting and electrical connections.
To complete the installation, install the Surround panel assembly. Refer to the instructions included with the surround panel kit to install properly.

**Framing and Finishing**

1. Choose unit location.
2. Frame out opening for fireplace as shown in Figures 2 through 5 and install finished wall surface over framing prior to setting fireplace into opening and securing unit.
3. The fireplace should be installed on a metal or wood panel extending the full width and depth of the appliance. The vertical dimensions in Figure 2 must be adjusted when a metal or wood panel is placed beneath the appliance.
4. Install the side Framing brackets (1 per side) using the pilot holes provided behind the side flanges on the fireplace outer wrap. Two setback locations are provided for locating the framing brackets depending on which decorative surround is to be installed. See Figures 9a and 9b. The pilot holes in the forward position should be used if installing the fireplace after the finished wall surface is present. The rearward hole position should be used to install the fireplace directly to the framed opening, prior to installing the finish wall surface.
   The framing bracket locations are based on using 1/2” thick surface finishing materials over the framing. See Figure 9.
   Note: If installing the framing brackets over the finished face wall surface, be sure you leave access for installing the venting components at the sides or rear of the framed out structure.
   Note: Use Figure 9a to locate the nailing flanges if installing a DS(25,33)66BL surround accessory. Use Figure 9b to locate the nailing flanges if installing a DF(25,33)M4 series surround accessory.
5. Secure unit to wall opening with common screw type fasteners. See Figures 5 and 9.
6. Maintain combustible clearances as shown by Figures 2 through 5.

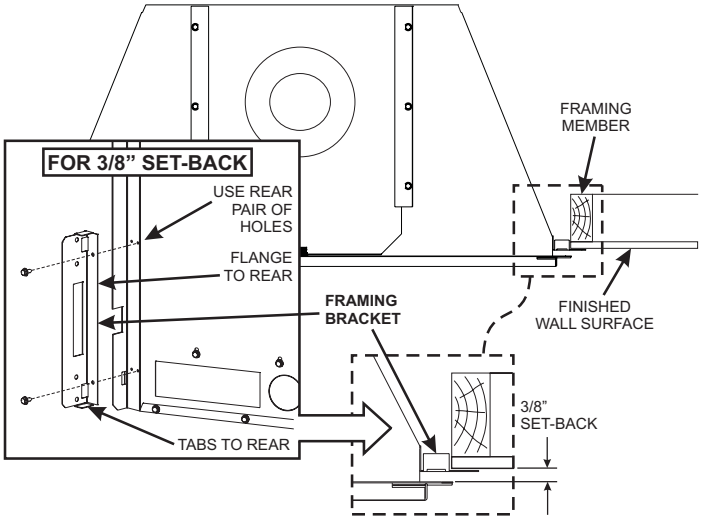


**Figure 9a**

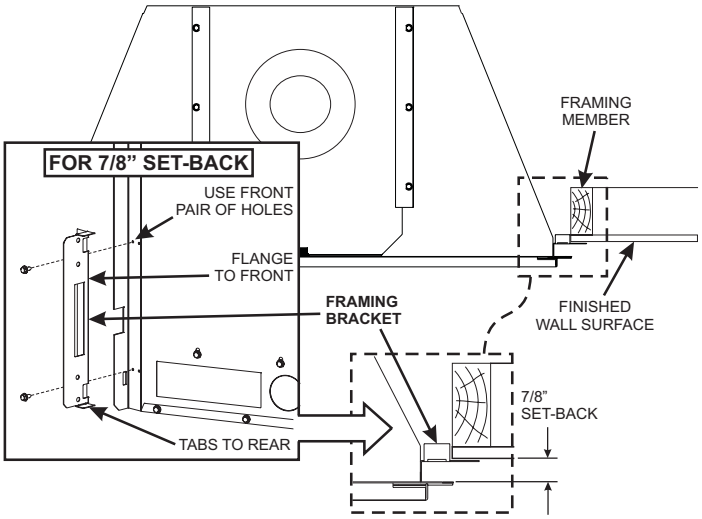


**Figure 9b**

7. Prior to installing the Fireplace, hand bend the two (2) Top Framing Spacers into triangles as shown in Figure 10. To attach the outer leg of the standoffs, remove one (1) screw from the front of the outer top flange of the fireplace, then re-instal the same screw through the tab of the top standoff spacers into the outer top to secure. See Figure 10.
   Note: A combustible header may rest on top of the top standoff spacers. Screws may be installed through the top of the standoff spacers and into the header to add stability of the spacer if desired.
8. Non-combustible headers may be used above the fireplace to maintain structural integrity, providing sufficient backing for non-combustible finishing materials.
9. Because of the close proximity of the vent system to the header framing, it is recommended that a combustible header be turned upright to provide the 1” minimum clearance required to vent pipe. See Page 7, Figure 2.
10. The finished wall surface materials must be non-combustible for a distance of at least 12” above the top of the fireplace outer cabinet.
11. It is recommended that the Junction Box be installed and properly wired whether or not the optional blower accessory is installed. Caution: Wiring must be performed by a qualified electrician.

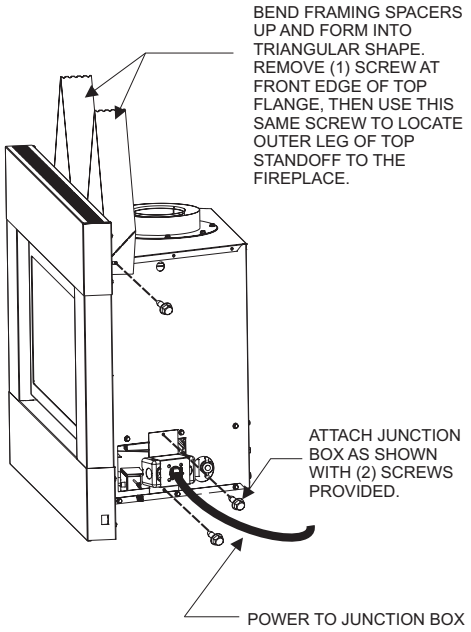

**Figure 10**

**Vent Pipe Clearance**
**Note:** Maintain one inch (1”) of clearance around vertical vent pipe. **See Figure 11**. For horizontal vent, maintain a minimum 1” clearance to the bottom and sides of the vent, and 3” clearance to combustibles above the vent pipe. **See Figure 12.**

**WARNING: WHEN FINISHING THE FIREPLACE, NEVER OBSTRUCT OR MODIFY THE AIR INLET/OUTLET OPENINGS IN ANY MANNER. PROVIDE ADEQUATE CLEARANCES AROUND AIR OPENINGS.**

**CAUTION: PRIOR TO INSTALLATION, MEASURE THE FIREPLACE AND VERIFY FRAMING REQUIREMENTS, METHODS, AND WALL COVERING DETAILS PRIOR TO FRAMING CONSTRUCTION.**

CAUTION: If the joints between the finished wall and the fireplace surround (top and sides) are sealed, a 300°F minimum sealant material must be used. These joints are not required to be sealed.

**Surround Installation**
To complete the installation of the Loft fireplace, a Surround Kit specifically designed for use with these fireplaces must be installed prior to use. Surround options shown on page 38 are available from your dealer. Follow the instructions included with the Surround Kit for proper installation.

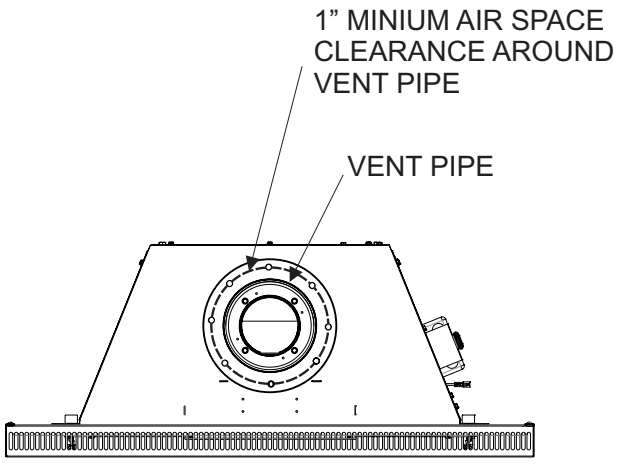

**Figure 11**

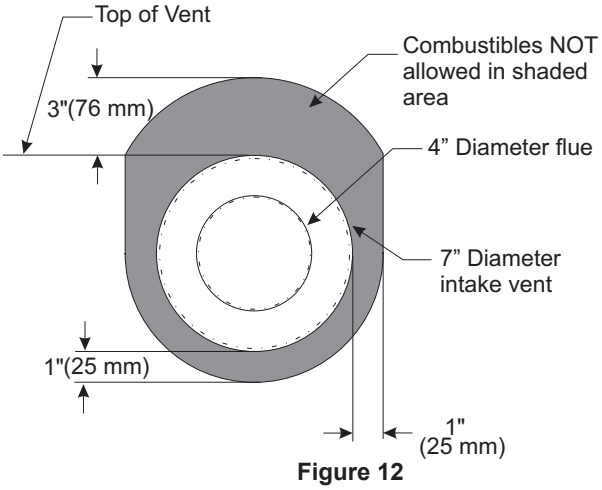

**Figure 12**

**Optional Blower Accessory**

The Loft fireplace may be equipped with an optional FBB8 blower accessory. See page 38.

The blower accessory may be installed at any time before or after installation of the fireplace providing that the junction box has been properly pre-wired and secured to the right hand side of the fireplace outer wrap. See Figures 10, 43 and 44.

**Caution:** Wiring must be performed by a qualified electrician.

**Note:** For shipping purposes, the junction box is installed on the inside of the outer fireplace wrap. It is secured with (2) screws on the side of the fireplace. Once removed from the side of the fireplace, wiring to the junction box and receptacle can be performed. Re-install the junction box assembly to the side of the fireplace so that the receptacle faces inward. See Page 11, Figure 10.

**CORNER INSTALLATION VERTICAL, 90° ELBOW TO HORIZONTAL OUT THE WALL (REQUIRES 24" VERTICAL RISE)**

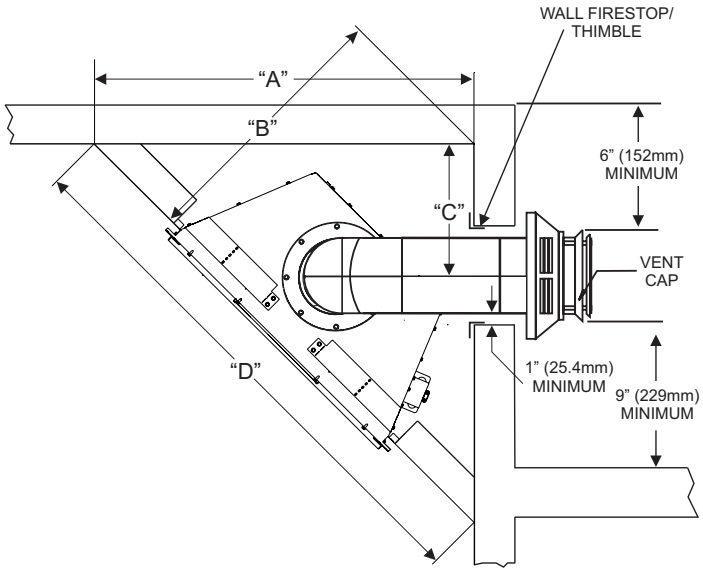


| Dim. | DVL25FP | DVL33FP |
|---|---|---|
| A | 37-13/16" | 42-11/16" |
| B | 26-3/4" | 30-3/16" |
| C | 14-1/16" | 15-5/16" |
| D | 53-1/2" | 60-3/8" |

**Figure 14**

**VERTICAL, 90° ELBOW TO HORIZONTAL OUT THE WALL (REQUIRES 24" VERTICAL RISE)**

**Figure 13**

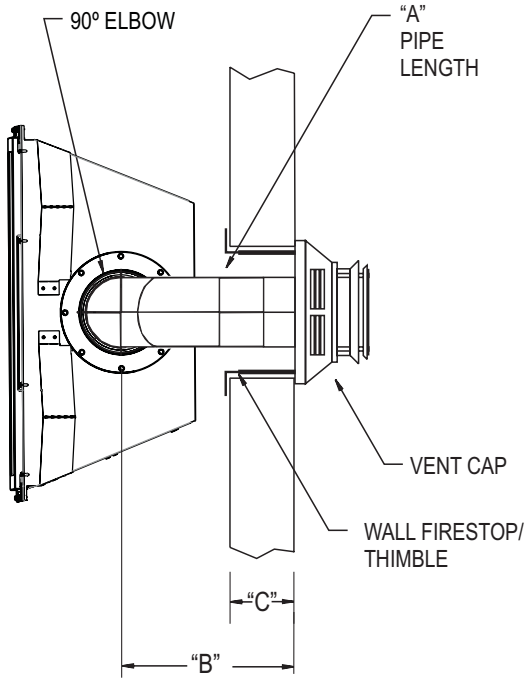


| "A" | "B" | "C" |
|---|---|---|
| 6" | 11 1/4" to 12 3/4"<br>(286 mm to 324 mm) | 4 3/4" to 6 1/4"<br>(121 mm to 159 mm) |
| 9" | 14 1/4" to 15 3/4"<br>(362 mm to 400 mm) | 7 3/4" to 9 1/4"<br>(197 mm to 235 mm) |
| 12" | 17 1/4" to 18 3/4"<br>(438 mm to 476 mm) | 10 3/4" to 12 1/4"<br>(273 mm to 311 mm) |

# VENT SYSTEMS

The following vent systems are acceptable for use with the DVL(25,33)FP series fireplaces:
**Simpson Duravent® GS 4" - 6 ⅝", refer to page 23.**
**American Metal Products 4" - 6 ⅝"**
**Selkirk Direct-Temp® 4" - 6 ⅝"**
**Security Secure Vent® 4" - 6 ⅝"**
**Excel DV Venting 4" - 6 ⅝"**
**Empire Horizontal Round Termination Kit DVVK-4RE. See Page 17 for termination venting information. Refer to the vent kit instruction for additional installation requirements.**
**Empire Flexvent Kit DVVK-4F**
**Empire Flexvent Kit DVVK-4FV**

**Installing the Vent System**

**Vent System Installation Precautions**
Before starting installation of vent kits, the installer should read these instructions and the Vent Kit Instructions to ensure that a proper vent installation is completed. Consult your local Building Codes before beginning the installation.

**⚠ WARNING**

**THIS GAS FIREPLACE AND VENT ASSEMBLY MUST BE VENTED DIRECTLY TO THE OUTSIDE AND MUST NEVER BE ATTACHED TO A CHIMNEY SERVING A SEPARATE SOLID FUEL BURNING APPLIANCE. EACH GAS APPLIANCE MUST USE A SEPARATE VENT SYSTEM. COMMON VENT SYSTEMS ARE PROHIBITED.**

**Vertical Venting**
The inlet and exhaust vent pipes **MUST** be connected to the proper collars on the unit **AND** to the termination cap or the unit will not operate.

**⚠ WARNING**

**MAJOR U.S. BUILDING CODES SPECIFY MINIMUM CHIMNEY AND/OR VENT HEIGHT ABOVE THE ROOF TOP. THESE MINIMUM HEIGHTS ARE NECESSARY IN THE INTEREST OF SAFETY. SEE FIGURES 13 AND 14 FOR MINIMUM HEIGHTS, PROVIDED THE TERMINATION CAP IS AT LEAST 2 FEET FROM A VERTICAL WALL AND 2 FEET BELOW A HORIZONTAL OVERHANG.**

**Note:** This also pertains to vertical vent systems installed on the outside of the building.

**Connecting the Vent Pipe**

**⚠ CAUTION**

**Sharp edges. Always use gloves when installing.**

# VERTICAL TERMINATION

**Determining Minimum Vent Height Above the Roof.**

**⚠ WARNING**

**Major U.S. building codes specify minimum chimney and/or vent height above the roof top. These minimum heights are necessary in the interest of safety. These specifications are summarized in Figure 13.**

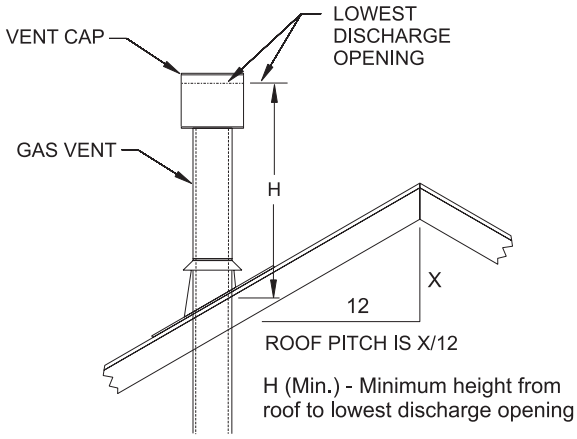


| ROOF PITCH | H (Min.) |
|---|---|
| Flat to 6/12 | 12" (305 mm) |
| 6/12 to 7/12 | 15" (381 mm) |
| Over 7/12 to 8/12 | 18" (457 mm) |
| Over 8/12 to 16/12 | 24" (610 mm) |
| Over 16/12 to 21/12 | 36" (914 mm) |

**Figure 15**

Note that for steep roof pitches, the vent height must be increased. In high wind conditions, nearby trees, adjoining roof lines, steep pitched roofs, and other similar factors can result in poor draft, or down-drafting. In these cases, increasing the vent height may solve this problem.

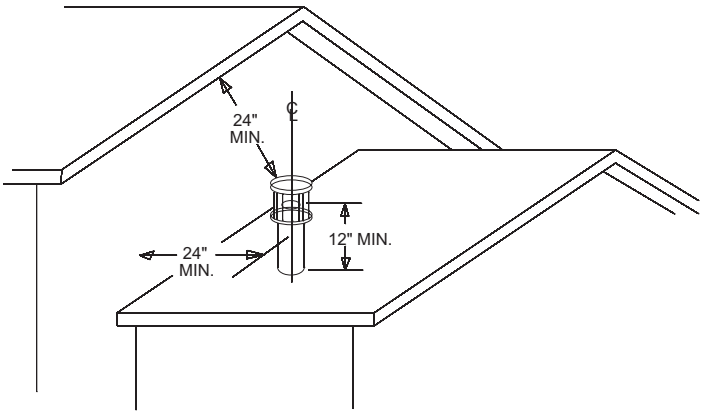


**Figure 16**

When terminating the vent cap near an exterior wall or overhang, maintain minimum clearances as shown in **Figure 14.**

**Vertical Through the Roof Applications**

The Gas Fireplace has been approved for:

a) Vertical installations up to 40 feet in height (bottom of fireplace to cap).
b) Two sets of 45 degree elbow offsets (bends in flexvent) within the vertical installation. From 0 to a maximum of 8 ft. of vent pipe can be used between elbows.
c) Wall straps must be used to support offset pipe every 4'.

This application will require that you first determine the roof pitch and use the appropriate venting components.

**General Maintenance**

Conduct an inspection of the venting system semi-annually. Recommended areas to inspect are as follows:

1. Check areas of the venting system which are exposed to the elements for corrosion. These will appear as rust spots or streaks and, in extreme cases, holes. These components should immediately be replaced.
2. Remove the cap and shine a flashlight down the vent. Remove any bird nests or other foreign material.
3. Check for evidence of excessive condensate, such as water droplets forming in the flex venting and subsequently dripping out at joints or seams. Condensate can cause corrosion of caps, pipe and fittings. It may be caused by having excessive lateral runs, or having exterior portions of the system exposed to cold weather.
4. Inspect joints to verify that no pipe sections or fittings have been disturbed and, consequently, loosened. Also, check mechanical supports, such as wall straps or plumbers' tape for rigidity.

# VENTING FIREPLACE - TOP

**To Use the Vent Graph (Figure 17)**

1. Determine the height of the center of the horizontal vent pipe. Using this dimension on the Sidewall Vent Graph, locate the point it intersects with the slanted graph line.
2. From the point of this intersection, draw a vertical line to the bottom of the graph.
3. Select the indicated dimension, and position the unit in accordance with same.

**EXAMPLE A:**
If the vertical dimension from the floor of the unit is 35 feet, the horizontal run to the outer wall flange must not exceed 6.5 feet.

**EXAMPLE B:**
If the vertical dimension from the floor of the unit is 6.8 feet, the horizontal run to the outer wall flange must not exceed 14.5 feet.

**SPECIAL NOTE:** For each 45 degree elbow installed in the horizontal run, the length of the horizontal run MUST be reduced by 18" (457 mm). This does not apply if the 45 degree elbows are installed on the vertical part of the vent system. Reduce 3' for every 90° elbow.

**Example:** According to the chart the maximum horizontal vent length is 20' and if two 45 degree elbows are required in the horizontal vent it must be reduced to 17'.

The maximum number of 45 degree elbows permitted per side wall installation is two (2). These elbows can be installed in either the vertical or horizontal run.

**Note:** On vertical venting the first elbow does not get counted.

**Venting Graph (Dimensions in Feet)**

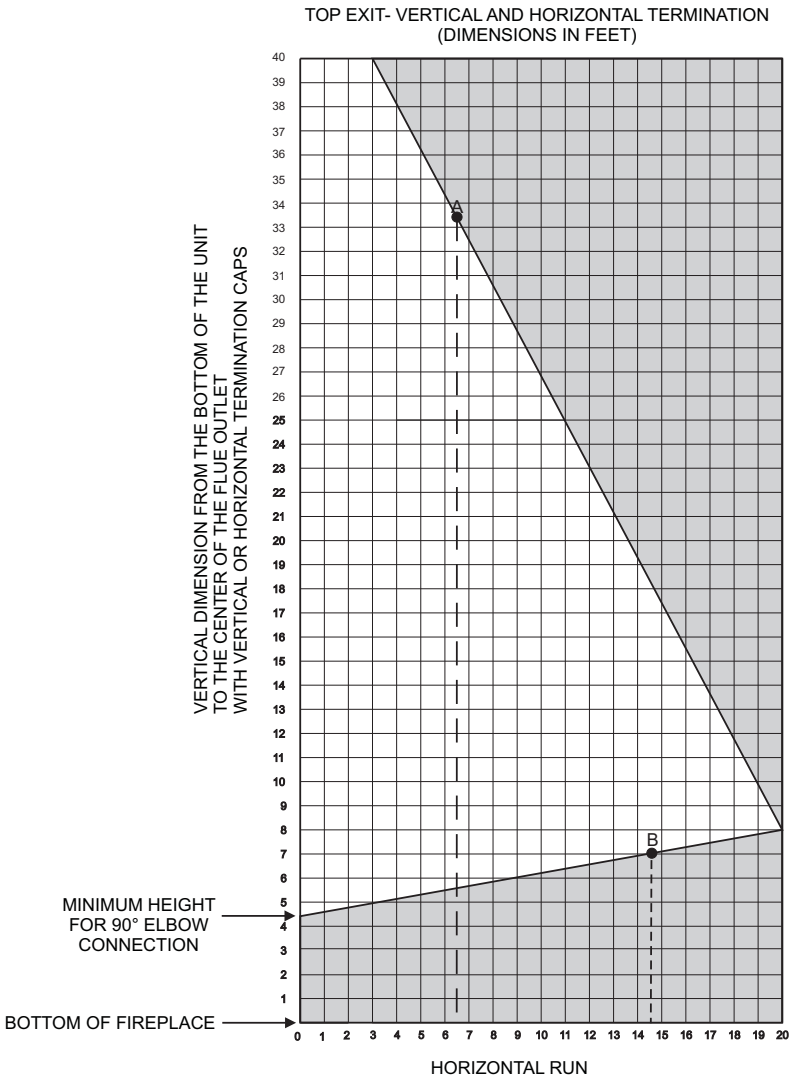


Acceptable vertical and horizontal vent run.
(40' maximum vertical and 20' maximum horizontal)

Unacceptable vertical and horizontal vent run.

**Figure 17**

**Below Grade Installation**
When it is not possible to meet the required vent terminal clearances of 12" (305 mm) above grade level, a snorkel kit is recommended. It allows installation depth down to 7" (178 mm) below grade level. The 7" (178 mm) is measured from the center of the horizontal vent pipe as it penetrates through the wall.

**Ensure the sidewall venting clearances are observed. If venting system is installed below ground, we recommend a window well with adequate and proper drainage to be installed around the termination area.**

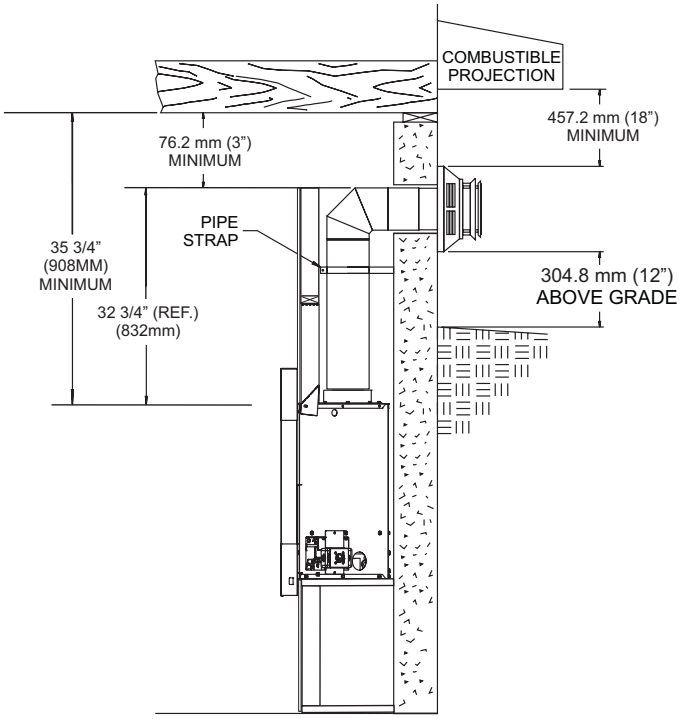


TYPICAL BASEMENT INSTALLATION

**Figure 18**

Examples of possible venting systems using one (1) 90° elbow. Eight (8) feet is listed as minimum vertical vent run with 20 feet of maximum horizontal vent run. Vertical dimensions are based on centerline to centerline of pipe. Horizontal dimensions are based on centerline of pipe to end of termination.

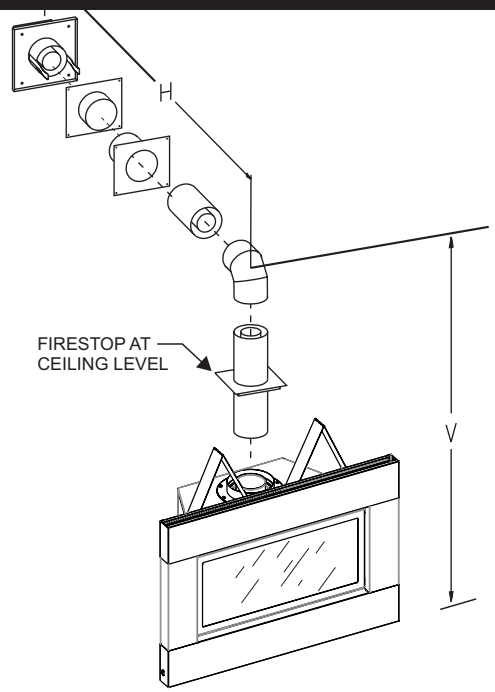


SEE GRAPH FOR PERMISSIBLE "H" AND "V" DIMENSIONS

**Figure 19**

Examples of possible venting systems using two (2) 90° elbows. V is listed as minimum vertical dimensions and H1 + H2 is listed as total of maximum horizontal dimensions. The maximum vertical and horizontal distances for two (2) 90° elbows as shown in Figures 17 and 26 is 20 feet (6.1 m).

Attention: Refer to Figure 21 for additional venting requirements.

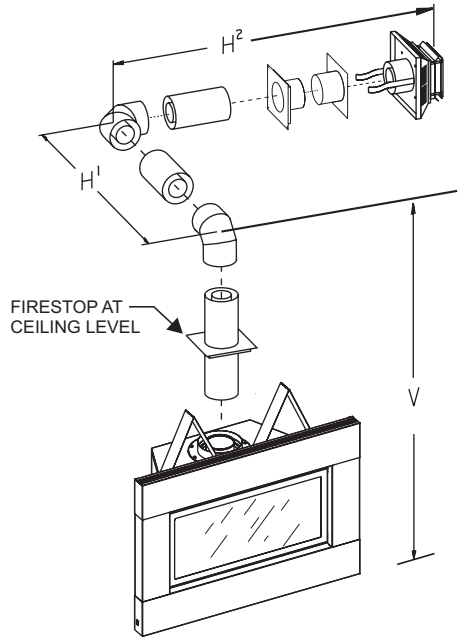


SEE GRAPH FOR PERMISSIBLE "H" AND "V" DIMENSIONS
NOTE: H1 AND H2 MUST BE ADDED TOGETHER TO USE CHART

**Figure 20**

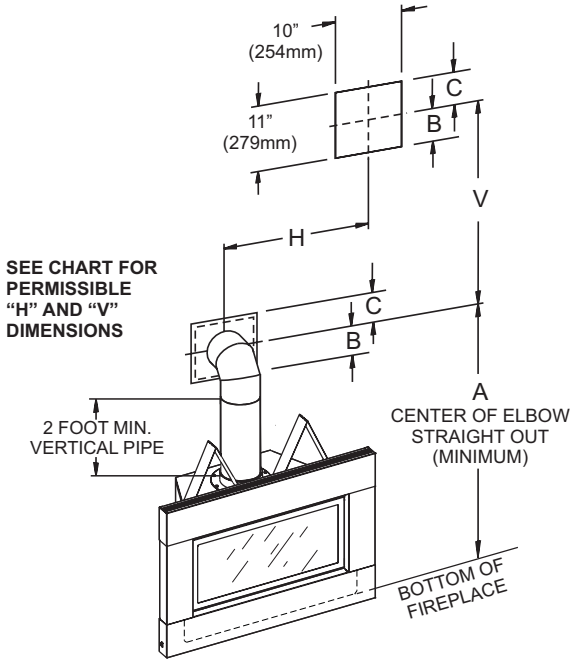


| FIREPLACE SERIES | HARD ELBOW DIMENSIONS | | | |
|---|---|---|---|---|
| | "A" | "B" | "C" | "D" |
| DVL25FP | 49 1/4” (1,250 mm) | 4 1/2” (114 mm) | 6 1/2” (165 mm) | 9 1/8” (232 mm) |
| DVL33FP | 52 1/4” (1,327 mm) | 4 1/2” (114 mm) | 6 1/2” (165mm) | 9 1/8” (232 mm) |

| FIREPLACE SERIES | FLEX PIPE 90 DEGREE BEND | | | |
|---|---|---|---|---|
| | "A" | "B" | "C" | "D" |
| DVL25FP | 49 1/4” (1,250 mm) | 4 1/2” (114 mm) | 6 1/2” (165 mm) | 9 1/8” (232 mm) |
| DVL33FP | 52 1/4” (1,327 mm) | 4 1/2” (114 mm) | 6 1/2” (165 mm) | 9 1/8” (232 mm) |

**MINIMUM HOLE LOCATION DIMENSIONS FOR THROUGH THE WALL HORIZONTAL INSTALLATIONS WITH 90 DEGREE ELBOW OFF TOP OF FIREPLACE**

**SEE FIGURE 17 VENTING CHART FOR PERMISSIBLE "H" AND "V" DIMENSIONS.**

**Figure 21**

**Positioning the Fireplace**

Determine the exact position of the appliance so the direct vent termination will be centered (if possible) between two (2) studs. This will avoid any extra framing. All vent kit pipes should be assembled on the unit after the unit is secured into the final position.

**Cutting the Hole**

After the fireplace has been positioned in its permanent location, the hole through the exterior wall of the house can be cut. This hole must be 11" (279mm) high x 10" (254mm) wide with its center line determined by the amount of vertical rise and horizontal run of the termination. (See Figure 21) When locating the hole it must be noted that the bottom of the cap must be 12" (305mm) above the ground level, and top of the cap must be no less than 18" (457mm) below a combustible projection, and no closer than 9" (229mm) to any wall running parallel to vent termination. See Figures 27 and 28. **Note: A minimum 2’ vertical rise is required off the top of the fireplace with all acceptable vent systems.**

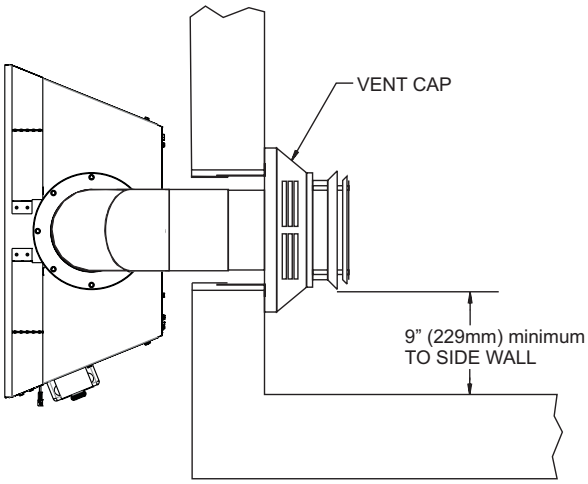


**Figure 22**

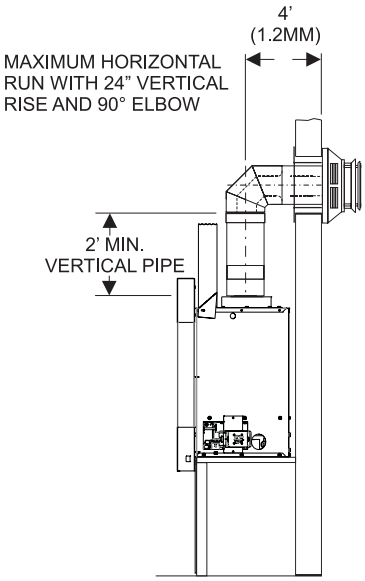


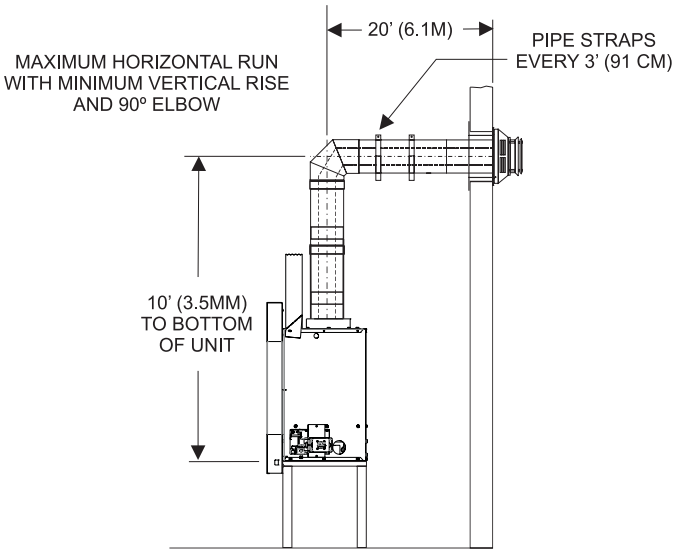


**Figure 23**

# EXAMPLES - TOP VENT RUN

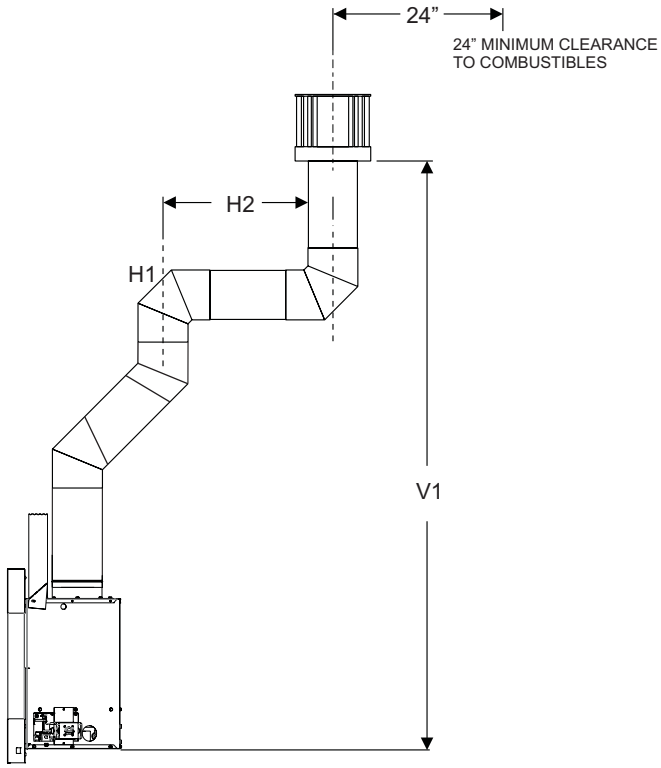


Example
H2= 2ft
2 - (90° + 90°)= 6ft

H= 8ft V= 15ft

**Figure 24**

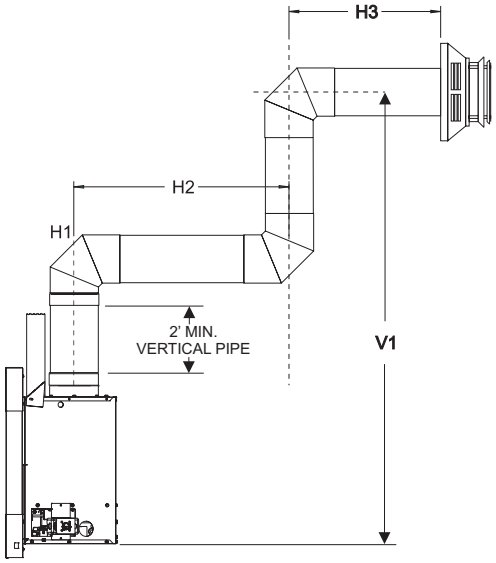


**Example**
**H2 - 3 ft (914 mm) H3- 1 ft (305mm) = 4 ft (122mm)**
**(90° + 90° + 90°) = 6 ft (1.83M)**
**V1 = 21 ft (6.4M)**

**H = 10 ft (3M) V =21ft (6.4M)**

**Figure 25**

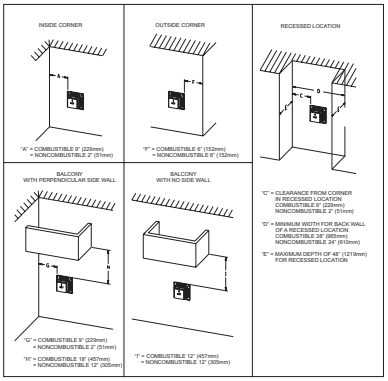


**Figure 26**

# TERMINATION CLEARANCES

Termination clearance for buildings with combustible and noncombustible exteriors.

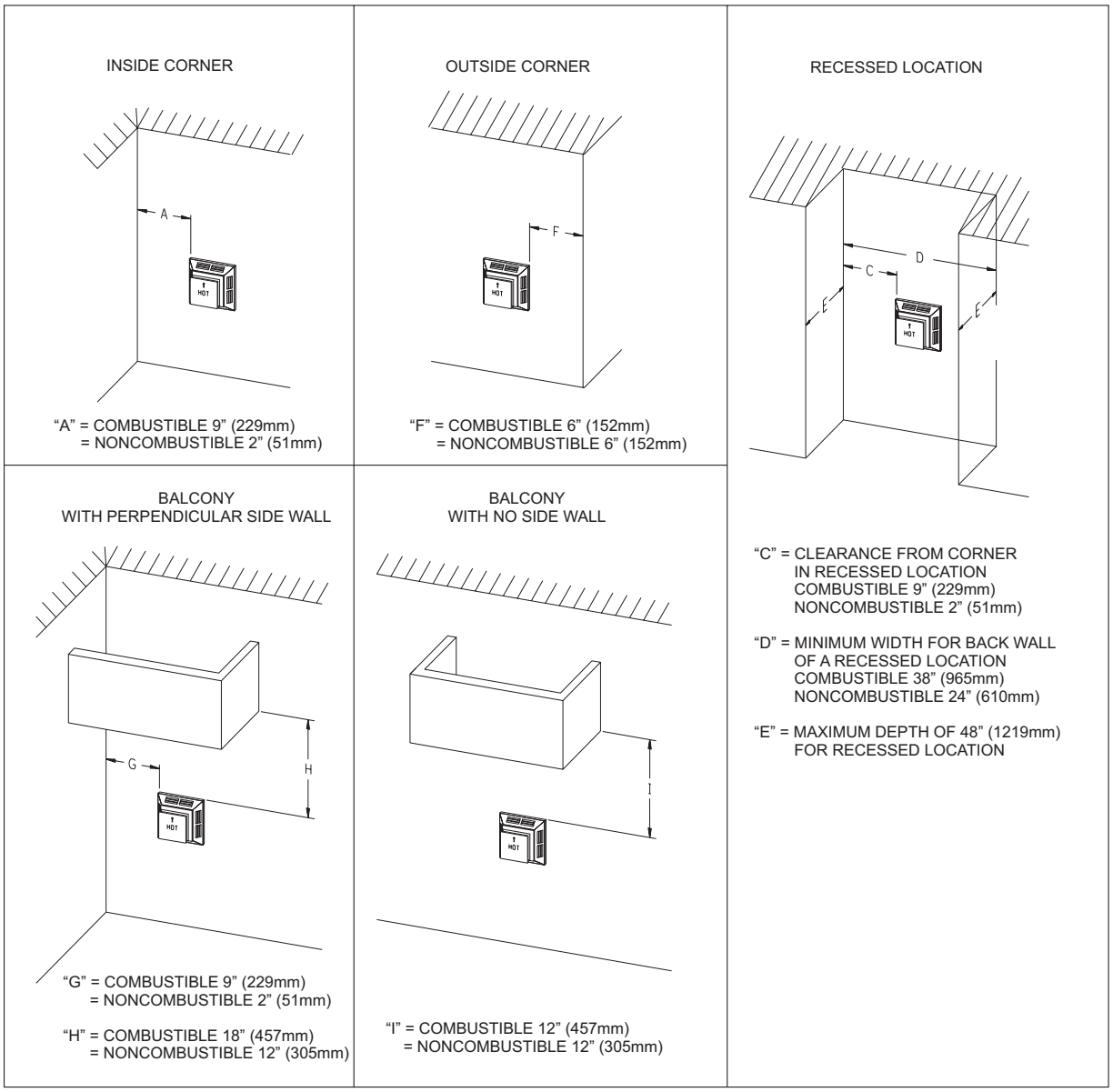


**Figure 27**

**Vertical Sidewall Installations**

**Important!** Minimum clearance between vent pipes and combustible materials is three (3") (76 mm) on top, and (1") (25 mm) on bottom and sides.

**Important!** When vent termination exits through foundation less than 20" below siding outcrop, the vent pipe must extend outward so that the horizontal vent terminal is located flush to, or beyond the outcrop siding.

**Information on Various Venting Routes and Components**

**Important:** It is always best to locate the fireplace in such a way that minimizes the number of offsets and horizontal vent length.

Since it is very important that the venting system maintain its balance between the combustion air intake and the flue gas exhaust, certain limitations as to vent configurations apply and must be strictly adhered to.

The graph showing the relationship between vertical and horizontal side wall venting will help to determine the various vent lengths allowable.

The horizontal vent run refers to the total length of vent pipe from the flue collar of the fireplace to the face of the outer wall.

The maximum horizontal vent run is 20 feet (6.10 m) when the vertical vent rise is 8 feet (2.44 m) (See Figure 17).

Venting terminals shall not be recessed into wall or siding.

# VENT CLEARANCES

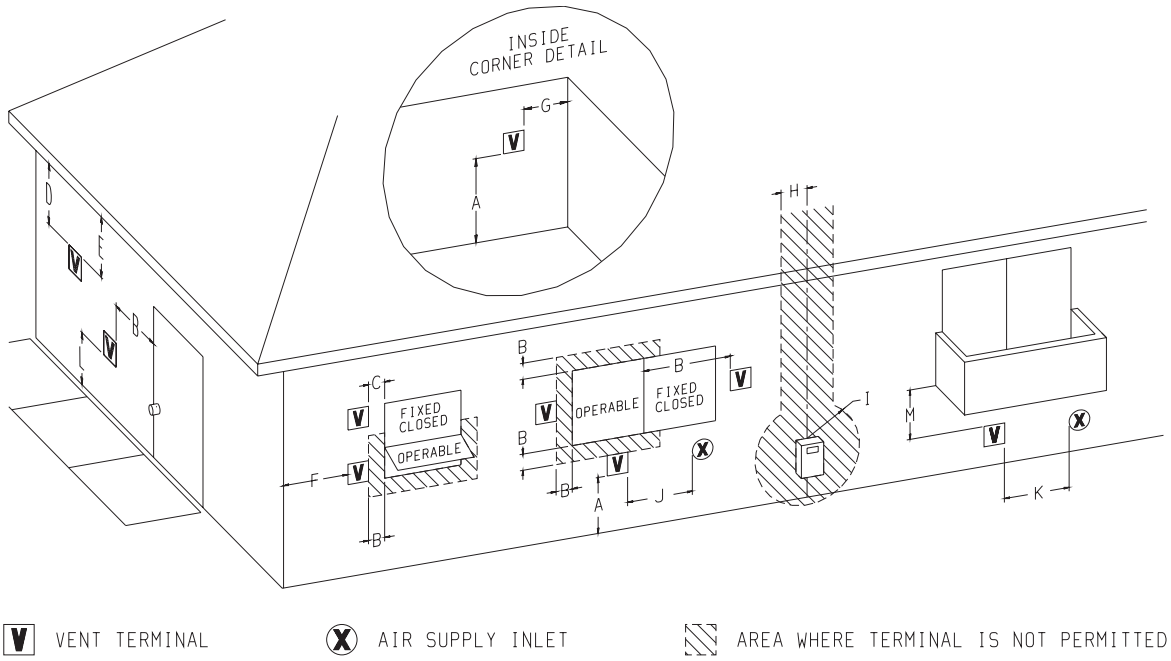


**Figure 28**

| | Canadian Installations1 | US Installations2 |
|---|---|---|
| A= Clearance above grade, veranda, porch, deck, or balcony | 12 in (30 cm) | 12 in (30cm) |
| B= Clearance to window or door that may be open | 6 in (15 cm) for appliances ≤ 10,000 Btuh (3 kW), 12 in (30 cm) for appliances > 10,000 Btuh (3 kW) and ≤ 100,000 Btuh (30 kW), 36 in (91 cm) for appliances > 100,000 Btuh (30 kW) | 6 in (15 cm) for appliances ≤ 10,000 Btuh (3 kW), 9 in (23 cm) for appliances > 10,000 Btuh (3 kW) and ≤ 50,000 Btuh (15 kW), 12 in (30 cm) for appliances > 50,000 Btuh (15 kW) |
| C= Clearance to permanently closed window | 12 in (30 cm) | 12 in (30 cm) |
| D= Vertical clearance ventilated soffit located above the terminal within a horizontal distance of 2 feet (61 cm) from the center line of the terminal | 24 in (61 cm) | 24 in (61 cm) |
| E= Clearance to unventilated soffit | 12 in (30 cm) | 12 in (30 cm) |
| F= Clearance to outside corner | 6 in (15 cm) | 6 in (15 cm) |
| G= Clearance inside corner | 9 in (23 cm) | 9 in (23 cm) |
| H= Clearance to each side of center line extended above meter/regulator assembly | 3 ft (91 cm) within a height 15 ft (4.5 m) above the meter/regulator assembly | 3 ft (91 cm) |

**ATTENTION: Vinyl Soffit, Vinyl Ceiling, Vinyl Overhang Disclaimer**

Clearances are to heat resistant material (i.e. wood, metal). This does not include vinyl. Empire Comfort Systems Inc. will not be held responsible for heat damage caused from terminating under vinyl overhangs, vinyl ceilings or vinyl ventilated/unventilated soffits.

| | Canadian Installations1 | US Installations2 |
|---|---|---|
| I= Clearance to service regulator vent outlet | 3 ft (91 cm) | 6 ft |
| J= Clearance to nonmechanical air supply inlet to building or the combustion air inlet to any other appliance | 6 in (15 cm) for appliances ≤ 10,000 Btuh (3 kW), 12 in (30 cm) for appliances > 10,000 Btuh (3 kW) and ≤ 100,000 Btuh (30 kW), 36 in (91 cm) for appliances > 100,000 Btuh (30 kW) | 6 in (15 cm) for appliances ≤ 10,000 Btuh (3 kW), 9 in (23 cm) for appliances > 10,000 Btuh (3 kW) and ≤ 50,000 Btuh (15 kW), 12 in (30 cm) for appliances > 50,000 Btuh (15 kW) |
| K= Clearance to a mechanical air supply inlet | 6 ft (1.83 m) | 3 ft (91 cm) above if within 10 ft (3 m) horizontally |
| L= Clearance above paved sidewalk or paved driveway located on public property | 7 ft (2.13 m) † | 7 ft (2.13 m) † |
| M= Clearance under veranda, porch deck, or balcony | 12 in (30 cm) ‡ | 12 in (30 cm) ‡ |

| | |
|---|---|
| 1 | In accordance with the current CSA B149.1, Natural Gas and Propane Installation Code |
| 2 | In Accordance with the current ANSI Z223.1/NFPA 54, National Fuel Gas Code |
| † | A vent shall not terminate directly above a sidewalk or paved driveway that is located between two single family dwellings and serves both dwellings |
| ‡ | Permitted only if veranda,, porch, deck, or balcony is fully open on a minimum of two sides beneath the floor. |
| * | For clearances not specified in ANSI Z223.1/NFPA 54 or CSA B149.1, one of the following shall be indicated: |

Clearance in accordance with local installation codes and the requirements of the gas supplier.

# VENT SYSTEM IDENTIFICATION

**Installing Vent Components (Figure 29)**

Begin the vent system installation by installing the first Simpson Duravent component, 90° elbow to the starting collars or straight pipe on the top of the appliance, then the straight pipe length and then horizontal or vertical termination kit.

**NOTE: All outer connection joints must be sealed with aluminum tape, screws or silicone sealant rated above 300°F/149°C. The inner flue joints do not require any sealant.**

Simpson Duravent vent system components lock into place by sliding the concentric pipe section with four (4) equally spaced interior beads onto the appliance collar or previously installed component end with four (4) equally spaced indented sections. When the internal beads of each starting outer pipe line up, rotate pipe section clockwise 90° (approximately 3 inches). The vent pipe is now locked together.

Continue adding components per the pre-planned vent system configuration. Be certain that each succeeding vent component is securely fitted and locked into the preceding component in the vent system.

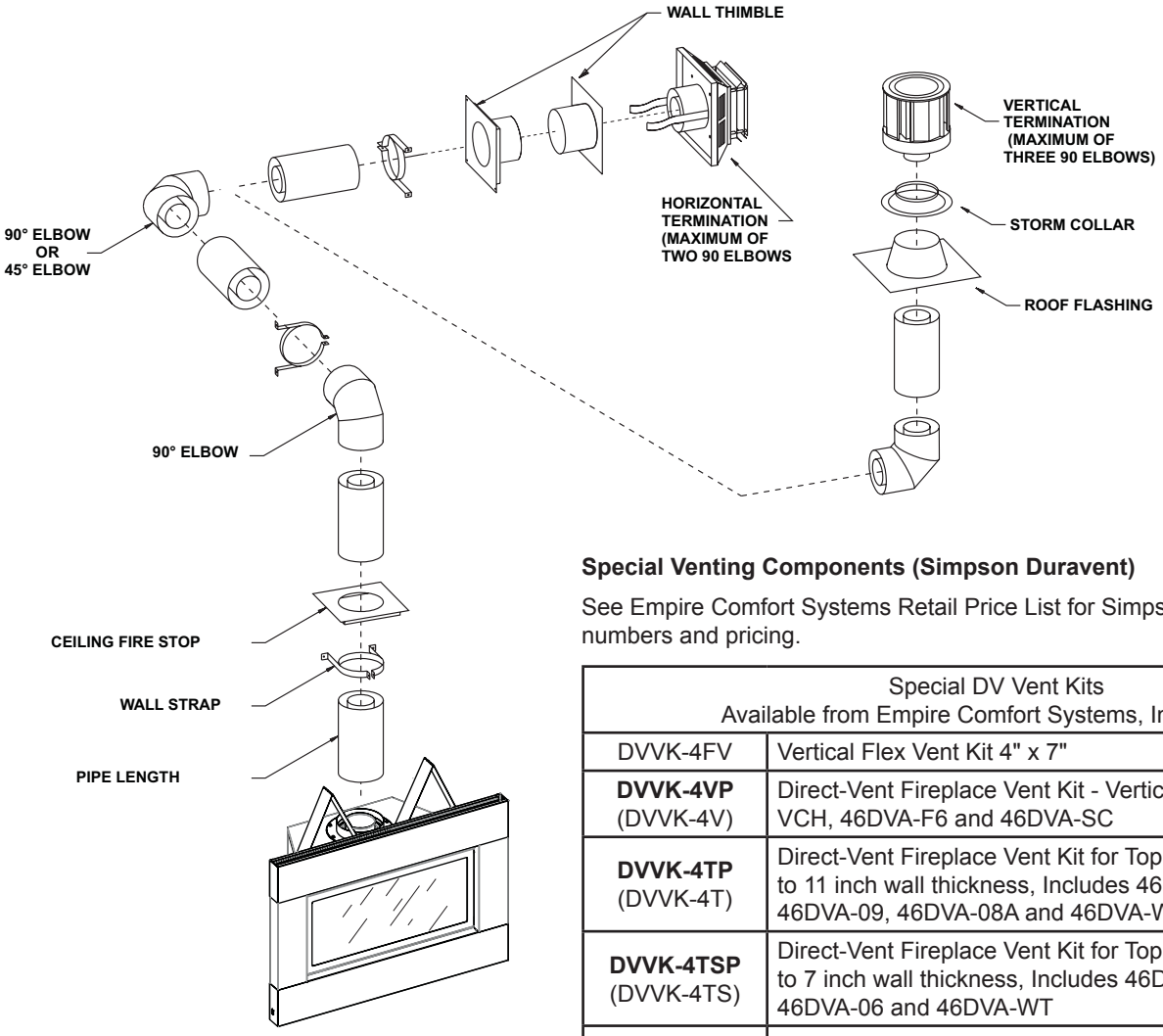


**Figure 29**

**Special Venting Components (Simpson Duravent)**

See Empire Comfort Systems Retail Price List for Simpson Duravent part numbers and pricing.

| Special DV Vent Kits<br>Available from Empire Comfort Systems, Inc. dealers | |
|---|---|
| DVVK-4FV | Vertical Flex Vent Kit 4" x 7" |
| **DVVK-4VP**<br>(DVVK-4V) | Direct-Vent Fireplace Vent Kit - Vertical, Includes 46DVA-VCH, 46DVA-F6 and 46DVA-SC |
| **DVVK-4TP**<br>(DVVK-4T) | Direct-Vent Fireplace Vent Kit for Top Vent, Thru-the-wall, 8 to 11 inch wall thickness, Includes 46DVA-HC, 46DVA-E90, 46DVA-09, 46DVA-08A and 46DVA-WT |
| **DVVK-4TSP**<br>(DVVK-4TS) | Direct-Vent Fireplace Vent Kit for Top Vent, Thru-the-wall, 5 to 7 inch wall thickness, Includes 46DVA-HC, 46DVA-E90, 46DVA-06 and 46DVA-WT |
| VIB6A | Vertical Inlet Baffle Kit for 6 5/8" diameter. |
| VIB7A | Vertical Inlet Baffle Kit for 7" diameter. |

**Installing Support Brackets (Figure 30)**

A horizontal pipe support MUST BE used for each 3 feet of horizontal run. The pipe supports should be placed around the pipe and nailed in place to framing members. There MUST BE a 3 inch clearance to combustibles above 6 5/8 inch diameter pipe and elbows and 1 inch clearance on both sides and bottom of 6 5/8 inch pipe to combustibles on all horizontal pipe sections and elbows.

Vertical runs of this vent systems must be supported every 4 feet above the appliance flue outlet by wall brackets attached to the 6 5/8 inch vent pipe and secured with nails or screws to structural framing members.

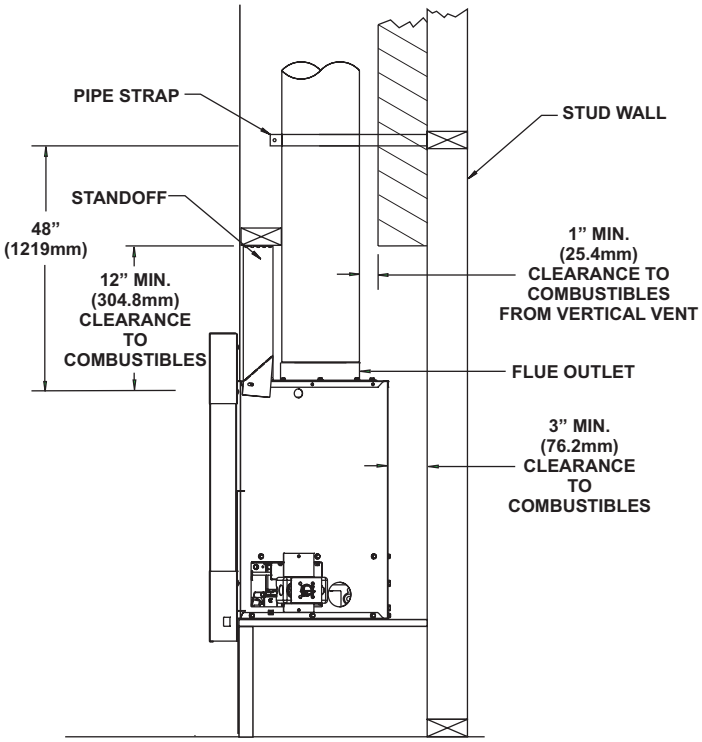


**Figure 30**

**Installing Firestops**

Firestops are required for safety whenever the vent system passes through an interior wall, an exterior wall, or a ceiling. These firestops act as a firebreak heat shield and as a means to insure that minimum clearances are maintained to the vent system.

**Horizontal Firestops (Figure 31)**

Horizontal runs in the vent system which pass through either interior or exterior walls, require the use of wall firestops on both sides of the wall through which the vent passes.

Position the firestops on both sides of the framed hole, previously cut. Refer to Figures 32 to 34 on page 25 for sizing information. Secure firestop with nails or screws. The heat shields of the firestops MUST BE placed towards the top of the hole. Continue the vent run through the firestops.

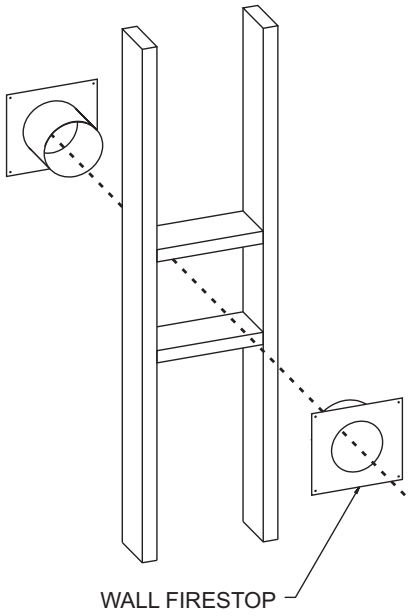


**Figure 31**

**Vertical Firestops (Figures 32, 33 and 34)**

Vertical runs of this system which pass through ceilings require the use of ONE (1) ceiling firestop at the hole in each ceiling through which the vent passes.

Position a plumb bob directly over the center of the vertical vent component and mark the ceiling to establish the center point of the vent. Drill a hole or drive a nail through this center point and check the floor above for any obstructions such as wiring or plumbing runs. Reposition the appliance and vent system, if necessary, to accommodate ceiling joists and/or obstructions.

Cut a 10 inch x 10 inch hole through the ceiling, using the center point previously marked. Frame the hole with framing lumber the same size as the ceiling joists. (See Figure 32.) If the area above the ceiling is NOT an attic, position and secure the ceiling firestop on the ceiling side of the previously cut and framed hole. (See Figure 33.) If the area above the ceiling is an attic, position and secure the firestop on top of the previously framed hole. (See Figure 34.)

**NOTE:** Remove insulation from the framed area in the attic before installing the firestop and/or vent pipes.

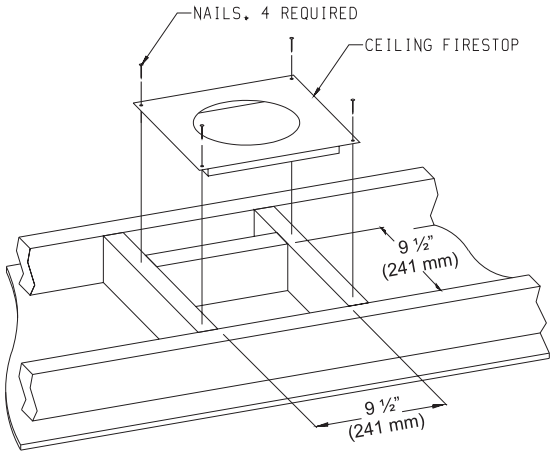


**Figure 34**

See **Vertical Termination** Pages 27 & 28.

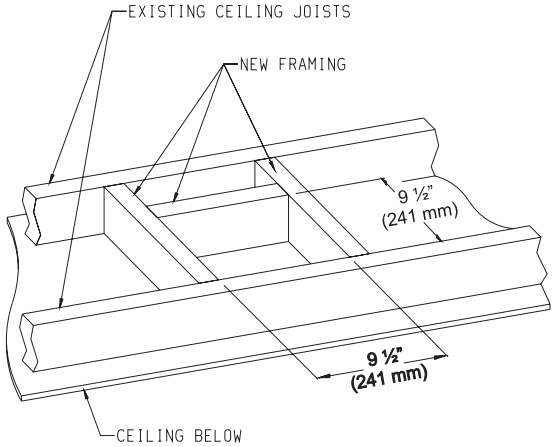


**Figure 32**

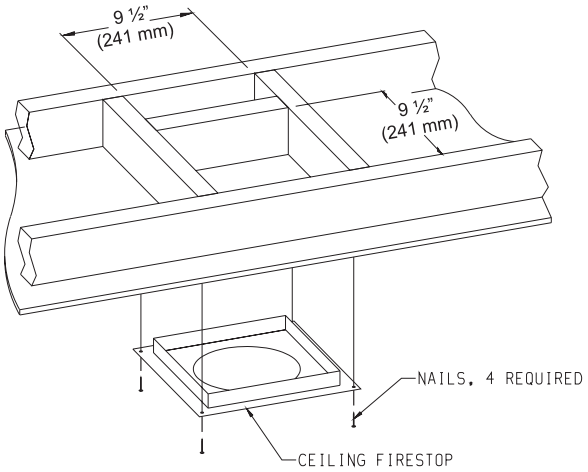


**Figure 33**

# HORIZONTAL TERMINATION

**NOTE:** Termination cap should pass through the wall firestop from the exterior of the building. Adjust the termination cap to its final exterior position on the building.

WARNING: Termination cap must be positioned so that arrow is pointing up.

Attach the termination cap with the four wood screws provided. Before attachment of the termination, run a bead of silicone sealant rated above 250°F on its outside edge too, so as to make a seal to the exterior wall.

NOTE**:** Wood screws can and should be replaced with appropriate fasteners for use on stucco, brick, concrete or other types of siding.

CAUTION**:** If exterior walls are finished with vinyl siding (or materials that could become discolored or warp), it is necessary to install a vinyl siding standoff.

The vinyl siding standoff will be installed between the vent termination and the exterior wall. (See Figure 35) This horizontal vent termination bolts onto the flat portion of the vinyl siding standoff, so an air space will exist between the wall and the termination cap.

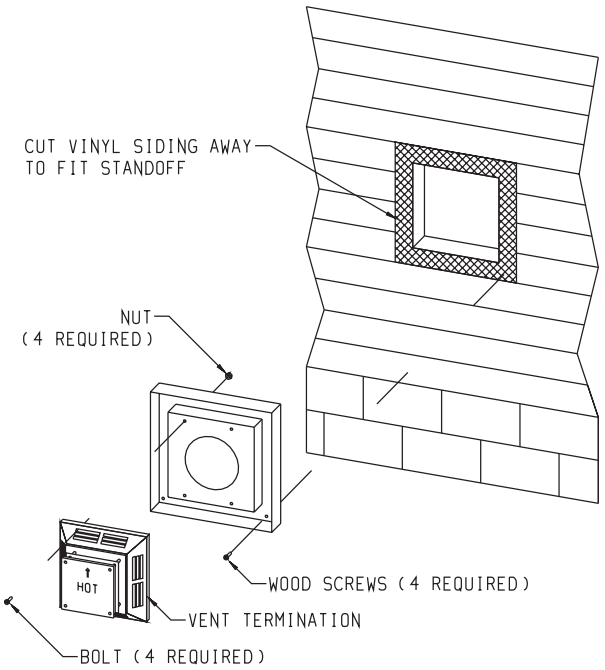


**Figure 35**

# VERTICAL TERMINATION

Locate and mark the center point of the vent pipe using a nail on the underside of the roof. Drive the nail through the center point. Mark the outline of the roof hole around this center point.

**NOTE:** Size of the roof hole dimensions depend on the pitch of the roof. There must be a 1 inch clearance (25 mm) to the vertical pipe sections. This clearance is to all combustible material.

Cover the opening of the vent pipe and cut and frame the roof hole. Use framing lumber the same size as the roof rafters and install the frame securely. Flashing anchored to frame must withstand high winds. The storm collar is placed over this joint to make a water-tight seal. Non-hardening sealant should be used to completely seal this flashing installation.

**Determining Minimum Vent Height Above the Roof.**

**WARNING: Major U.S. building codes specify minimum chimney and/or vent height above the roof top. These minimum heights are necessary in the interest of safety. These specifications are summarized in Figure 36**.

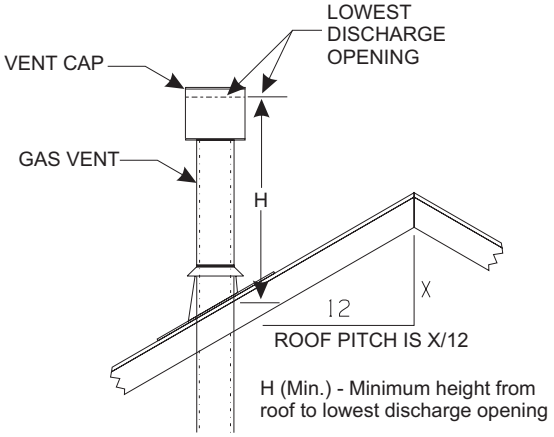


| ROOF PITCH | H (Min.) |
|---|---|
| Flat to 6/12 | 12" (305 mm) |
| 6/12 to 7/12 | 15" (381 mm) |
| Over 7/12 to 8/12 | 18" (457 mm) |
| Over 8/12 to 16/12 | 24" (610 mm) |
| Over 16/12 to 21/12 | 36" (914 mm) |

**Figure 36**

Note that for steep roof pitches, the vent height must be increased. In high wind conditions, nearby trees, adjoining roof lines, steep pitched roofs, and other similar factors can result in poor draft, or down-drafting. In these cases, increasing the vent height may solve this problem.

**General Maintenance**

Conduct an inspection of the venting system semi-annually. Recommended areas to inspect are as follows:

1. Check areas of the venting system which are exposed to the elements for corrosion. These will appear as rust spots or streaks and, in extreme cases, holes. These components should immediately be replaced.

2. Remove the cap and shine a flashlight down the vent. Remove any bird nests or other foreign material.
3. Check for evidence of excessive condensate, such as water droplets forming in the inner liner and subsequently dripping out at joints. Condensate can cause corrosion of caps, pipe and fittings. It may be caused by having excessive lateral runs, too many elbows and exterior portions of the system being exposed to cold weather.
4. Inspect joints to verify that no pipe sections or fittings have been disturbed and, consequently, loosened. Also, check mechanical supports, such as wall straps or plumbers' tape for rigidity.

Venting terminal shall not be recessed into a wall or siding.

A removable panel or other means must be provided in the enclosure for visual inspection of the flue connection.

NOTE: This also pertains to vertical vent systems installed on the outside of the building.

Slide the vertical vent cap over the ends of the vent pipe and secure. See Figure 37.

**Installing the Vent System in a Chase**

A chase is a vertical box-like structure built to enclose the gas appliance and/or it's vent system. Vertical vent runs on the outside of a building may be, but are not required to be installed inside a chase.

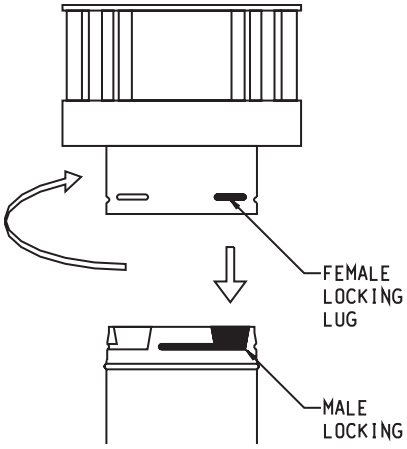


**Figure 37**

**CAUTION: Treatment of firestop spacers and construction of the chase may vary with the type of building. These instructions are not substitutes for the requirements of local building codes. Therefore, your local building codes must be checked to determine the requirements for these steps.**

**NOTE:** When installing this vent system in a chase, it is always good building practice to insulate the chase as you would the outside walls of your home. This is especially important for cold climate installations. Upon completion of building your chase framing, install the vent system by following the instructions in this manual. Remember to build the chase large enough so that minimum clearance of combustible materials (including insulation) to the vent system are maintained.

**Installation of Vertical Inlet Baffle**

The vertical inlet baffle is to be used only in a completely vertical vent installation. The vertical inlet baffle can be used when the vertical vent rise is between 10 feet and 40 feet. To maintain the yellow flame in the main burner, purchase Vertical Inlet baffle, DVF-139 from your Empire Comfort Systems, Inc. distributor or dealer for Simpson Duravent only.

In a vertical vent rise the flame on the main burner can be reduced due to the drawing action from the flue exhaust pipe and the air inlet pipe. A decrease in the height or the appearance of the yellow flame may occur when the vertical vent rise is between 10 feet and 40 feet. To enhance the yellow flame on the main burner, the vertical inlet baffle can be attached to the direct vent high wind vertical top.

**Please use the following steps to install the vertical inlet baffle.**

1. Place the vertical inlet baffle over the exterior of the air inlet openings on the direct vent high wind vertical top.
2. There are three sections of air openings on the exterior of the air inlet pipe.
   To achieve the **maximum** amount of yellow flame the vertical inlet baffle will cover-up three sections of air openings.
   To achieve the **minimum** amount of yellow flame the vertical inlet baffle will cover-up one section of air openings.
3. Attach vertical inlet baffle to the direct vent high wind vertical top with (2) 3/8" hex-head screws provided with vertical inlet baffle.
4. Installation of vertical inlet baffle is completed.

**Parts List**

| Description | Part Number | Quantity Supplied |
|---|---|---|
| Vertical Inlet Baffle | DVF-139 | 1 |
| 3/8" Hex-Head Screw | R-2656 | 2 |

**Reassembly and Resealing Vent Pipe System**

Attach vent pipe to inlet and outlet vent adaptor on fireplace. Replace the horizontal and vertical pipe lengths, elbows and horizontal or vertical termination kit.

All vent system components lock into place by sliding the concentric pipe section with four (4) equally spaced interior beads onto the appliance collar or previously installed component end with four (4) equally spaced indented sections. When the internal beads of each starting outer pipe line up, rotate pipe section clockwise 90° (approximately 3 inches). The vent pipe is now locked together.

Continue replacing components per the vent system configuration. Be certain that each succeeding vent component is securely fitted and locked into the preceding component in the vent system.

**Reassembly and Resealing Gas Accumulation Relief System Glass Frame Assembly and Combustion Chamber**

Whenever the glass frame assembly is pivoted open by a delayed ignition in the main burner, the glass frame assembly gaskets and combustion chamber must be examined by a qualified service person for damage. All damaged gaskets on the glass frame assembly and combustion chamber must be replaced by a qualified service person. If damage occurs to the combustion chamber, it must be replaced by a qualified service person. Contact Empire Comfort Systems, Inc. for replacement parts.

**Vertical Through the Roof Applications (Figure 38)**

Your Gas Fireplace has been approved for:

a) Vertical installations up to 40 feet in height.
b) Two sets of 45 degree elbow offsets within these vertical installations. From 0 to a maximum of 8 ft. a vent pipe can be used between elbows.
c) Wall straps must be used to support offset pipe every 4'.

This application will require that you first determine the roof pitch and use the appropriate venting components.

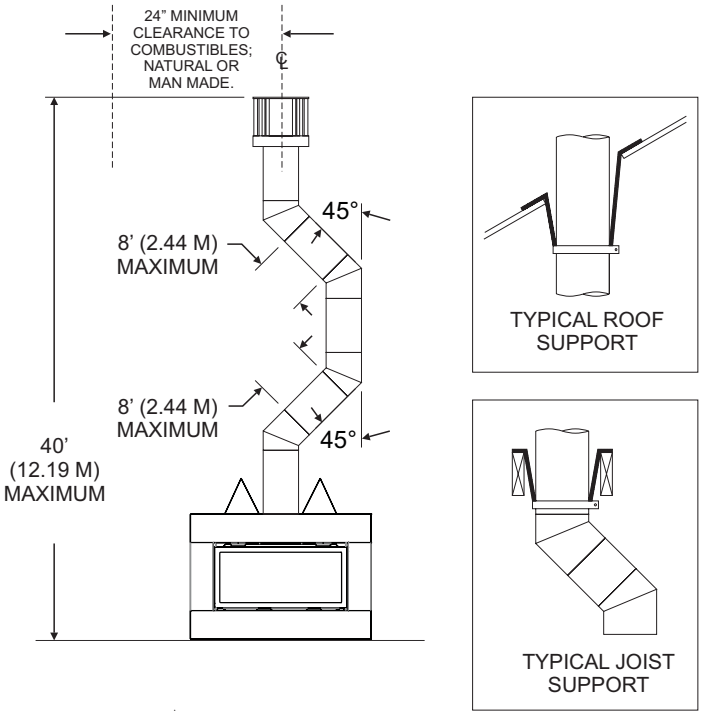


**Figure 38**

# ALTERNATE ON/OFF SWITCH INSTALLATION

**WIRING THE FIREPLACE**

***NOTICE*: Electrical wiring must be installed by a licensed electrician.**

**⚠ CAUTION**

***DISCONNECT REMOTE CONTROLS IF YOU ARE ABSENT FOR EXTENDED TIME PERIODS. THIS WILL PREVENT ACCIDENTAL FIREPLACE OPERATION.***

**Installation of Alternate Surround Panel ON/OFF Switch**

An ON/OFF switch and wire assembly are provided. They are included in the instruction packet.
Do not cut wire or insulation on metal edges.
***NOTICE*: Refer to surround panel installation instructions for additional information on attachment.**

**Contemporary Surrounds**

1. Find the coiled low voltage wire assembly and ON/OFF switch located in the instruction packet.

2a. **Millivolt Units:** Attach the flag terminal ends to the "TH/TP" and "TH" terminals on the front terminal block of the gas valve. See Figure 40.

2b. IP Unites: Disconnect the two black wires from the green and white wire connectors. Connect alternate On/Off switch wires to the green and white wires.
Note: This bypasses the On/Off switch located on the front of the control module tray.

3. Run the low voltage alternate switch wires over to the right or left surround panel. Then secure the wires with wire clips provided. **See Figure 39.**

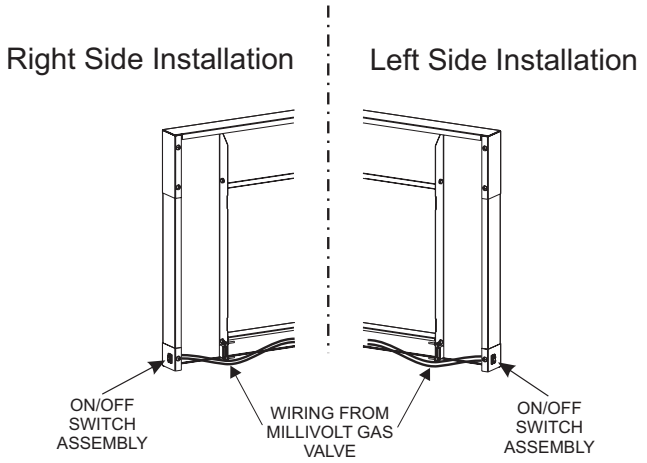


**Figure 39**

**Insert ON/OFF switch into side panel then attach wire assembly from valve terminals on millivolt units, or from the green and white wire connectors on IP units.**

4. Remove the switch knockout on the side surround panel, then install the ON/OFF switch. See Figure 39.

5. Connect the low voltage wires from the gas valve to the ON/OFF switch.

6. Attach the surround panel assembly to the fireplace. Hang the surround panel assembly on the face of the fireplace and center left to right.
**DF(25,33)M4 Surrounds:** Swing the surround panel assembly inward until the bottom magnets contact the fireplace body side flanges.
**For DS(25,33)66BL Surrounds:** Swing the surround assembly inward, then lift each leg slightly to engage the retainer hook into the side flange notches of the fireplace.
All surrounds: This secures the surround panel assembly to the fireplace without screws.

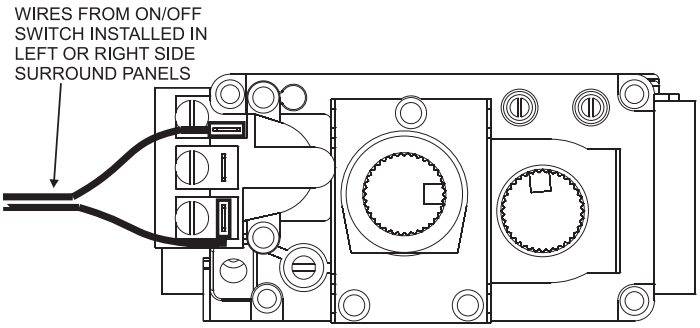


NOTE: TO OPERATE INSERT WITH SIDE PANEL ON/OFF SWITCH, BE SURE TO PLACE THE MAIN SWITCH (TO THE RIGHT SIDE OF GAS VALVE) TO "**OFF**" POSITION.

**Figure 40**

# SURROUND PANEL INSTALLATION

**INSTALLING THE SURROUNDS**

Follow the assembly instructions for surround panels packed with each surround panel kit.

**⚠ WARNING**

**WHEN FINISHING THE FIREPLACE, NEVER OBSTRUCT OR MODIFY THE AIR INLET/OUTLET LOUVERS ON THE FIREPLACE IN ANY MANNER.**

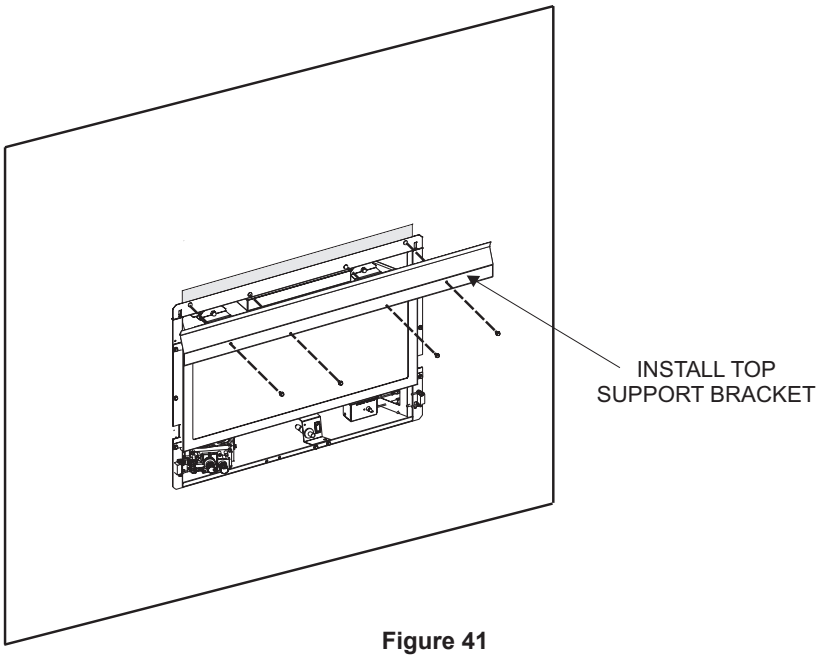


**Figure 41**

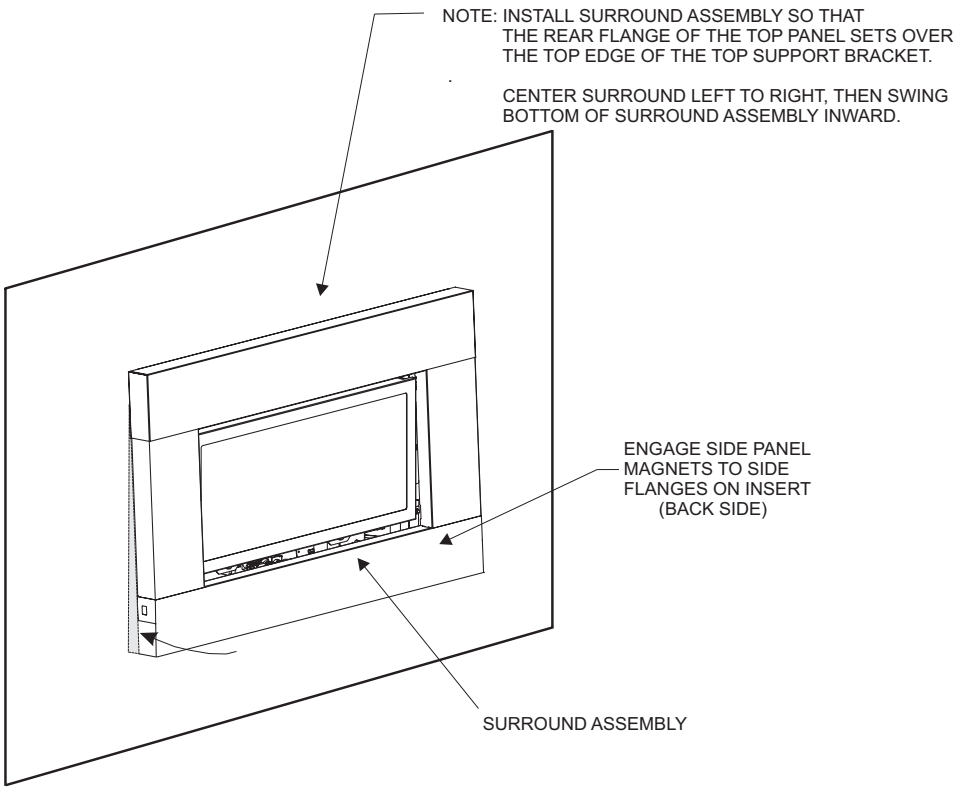


**Figure 42**

# OPTIONAL BLOWER ACCESSORY INFORMATION

**The appliance, when installed must be electrically connected and grounded in accordance with local codes or, in the absence of local codes, with the current CSA C22.1 Canadian Electrical Code.**

**U.S. Installations, follow local codes and the National Electrical Code, ANSI/NFPA No. 70.**

**Should this blower require servicing, the power supply must be disconnected. For rewiring of any replacement components, refer to Figures 43 and 44 and the parts list included with the blower assembly instructions.**

**BLOWER ACCESSORY**

**Operation**

The fireplace is equipped to receive an optional FBB8 blower accessory that includes a fan control switch, plus a rheostat (speed control).

If you choose to install the optional blower, you can expect it to operate as follows:

From a cold start, the temperature activated fan control switch will normally take 5-10 minutes to heat up and energize the blower.

Once the blower is energized, adjust the blower speed control as desired, then replace the surround kit assembly.

When the fireplace is shut off, it may take 30-40 minutes for the heated unit to dissipate (cool down) enough for the blower to shut off automatically. ***NOTICE***: The blower shut off times will vary on blower speed and BTU input level setting control by adjustment of the HI/LO knob located on the gas valve.

Note: For installation of FBB8 blower accessory, refer to the instructions included with the blower kit.

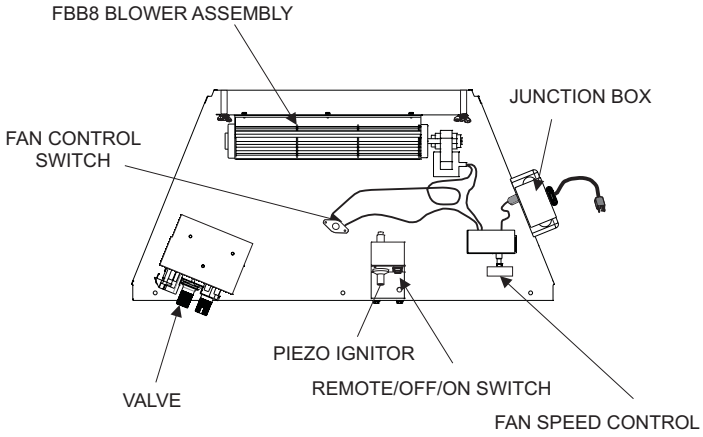


Note: The fan control switch is secured with two 8-32 Hex nuts to the bottom side of the firebox. Threaded studs are provided at the center of the fireplace, approximately 5” behind the front of the fireplace.

**Figure 43**

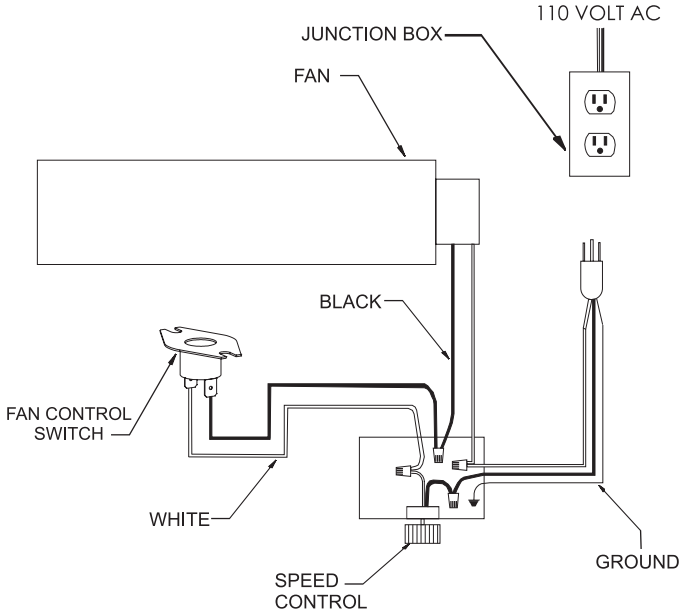


**Figure 44**

# OPTIONAL DECORATIVE GLASS PLACEMENT

**WARNING: Failure to position the parts in accordance with the diagrams and instructions below or failure to use only parts specifically approved for use with this heater may result in property damage or personal injury.**

**NOTE: The DVL Fireplace may be operated with or without the Decorative glass accessory options. Follow the directions below should you choose to enhance your Loft Fireplace with any one of the available decorative glass options.**

**DECORATIVE GLASS ACCESSORY PLACEMENT**

The Decorative Glass options are available in various colors and package sizes. Choose the proper size kit for use with your particular Loft Fireplace. See Page 38.

**CAUTION: Use of gloves and eye protection is required while applying the decorative glass.**

**INSTALLATION**

1. Application of the Decorative Glass should only be performed after the DVL Fireplace has been fully installed, secured and tested for leaks. If operating the burner with a Remote Control, make sure all batteries are installed and that the burner operates with the remote correctly.

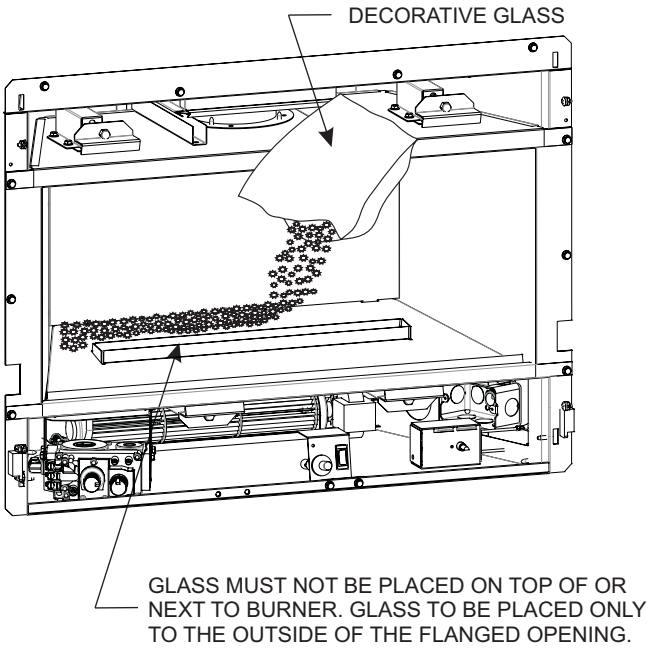


**Figure 45**

2. To install the Decorative Glass, cut off a corner of the plastic bag and proceed to apply the glass to the rear shelf on the Loft burner cover (area behind the burner). See Figure 45. Apply only enough glass to cover the black metal surfaces. Do not allow the glass to fall around the burner tube. See Figure 46. Apply the remaining decorative glass to the front sloped surface of the Top Cover. Start by placing the glass along the front edge of the top cover, then gradually place the glass up the sloped top cover until completely covered. Do not allow the glass to fall around the burner tube. See Figure 47.

**CAUTION: Glass must not be placed on the burner.**

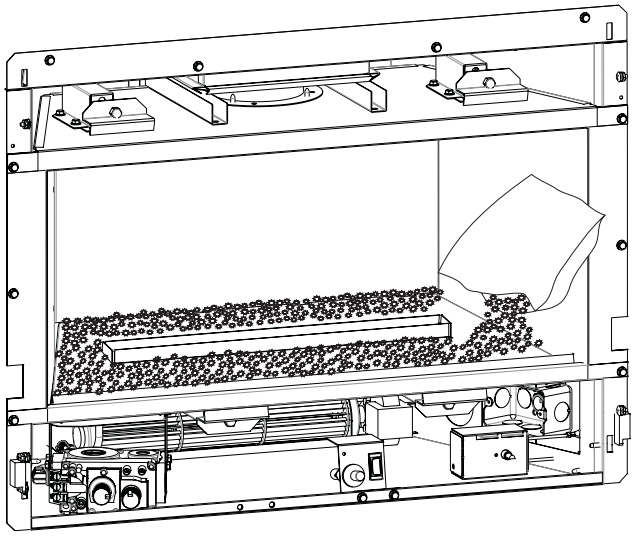

**Figure 46**

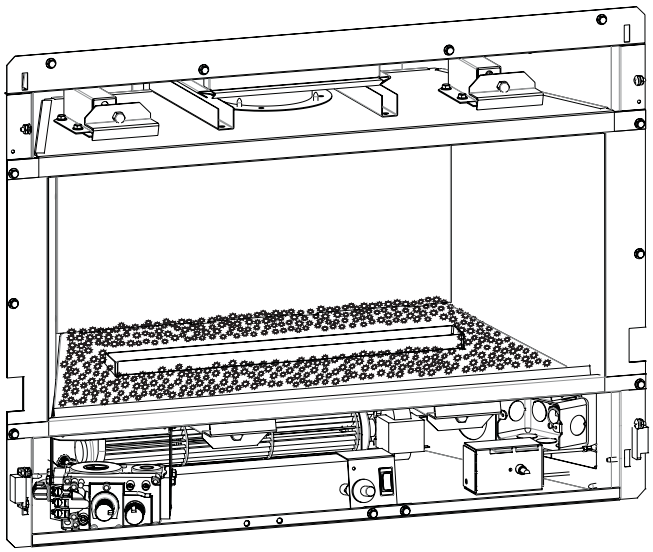

**Figure 47**

**750 Millivolt System**
The standing pilot (750 millivolt system) is a continuous burning pilot. The pilot remains ON even when the main burner is OFF.

When you ignite the pilot, the thermopile produces millivolts (electrical current) which energizes the magnet in the gas valve. After 30 seconds to 1 minute time period you can release the gas control knob and the pilot will stay ON. Allow your pilot flame to operate an additional one (1) to two (2) minutes before you turn the gas control knob from the PILOT position to the ON position. This time period allows the millivolts (electrical current) to build-up to a sufficient level allowing the gas control to operate properly.

1. Follow the SAFETY and LIGHTING INSTRUCTIONS for standing pilot controls found in this manual and on labels found in control compartment behind the door assembly.

**⚠ WARNING**

**During the initial purging and subsequent lightings, never allow the gas valve control knob to remain depressed in the "pilot" position without pushing the piezo ignitor button at least once every second.**

2. During the operating season, leave the control valve knob in the "ON" position. This will allow the pilot flame to remain lit. Turn the burner flame on or off with the fireplace REMOTE/OFF/ON switch, wall switch or remote controls.

***NOTICE***: The gas control valve allows you to increase or decrease the height of the main burner flame. The control valve has a pressure regulator with a knob as shown in **Figure 48**. Rotate the knob clockwise to "HI" to increase the flame height and counterclockwise to "LO" to decrease the flame height.

3. When the operating season is over, turn the REMOTE/OFF/ON switch to "OFF" and the control valve to "OFF". The system, including the pilot light, will be shut down.

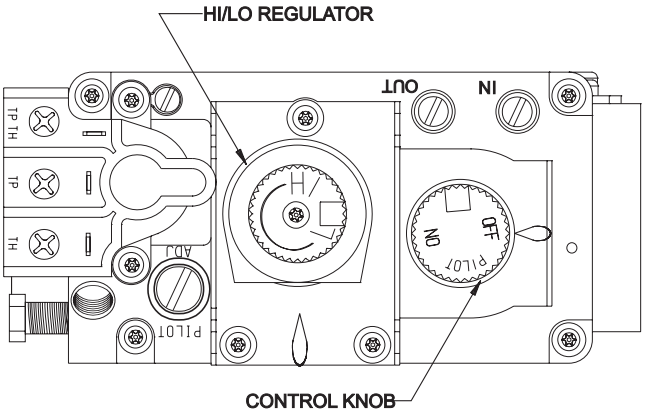

**Figure 48**

The OWNER should carefully read and follow these operating instructions at all times. Lower the door assembly to view the gas controls for the fireplace.

**Initial Lighting**
Upon completing the gas line or turning the gas valve on after it has been in the "OFF" position, a small amount of air will be in the lines. When first lighting the fireplace, it will take a few minutes for the lines to purge themselves of this air. Once the purging is complete, the fireplace will light and operate satisfactorily.

Subsequent lightings of the appliance will not require such purging if the gas valve is not turned to "OFF."

**Pilot Flame (Figure 49)**
The thermopile/thermocouple (standing pilot) tips should be covered with flame.

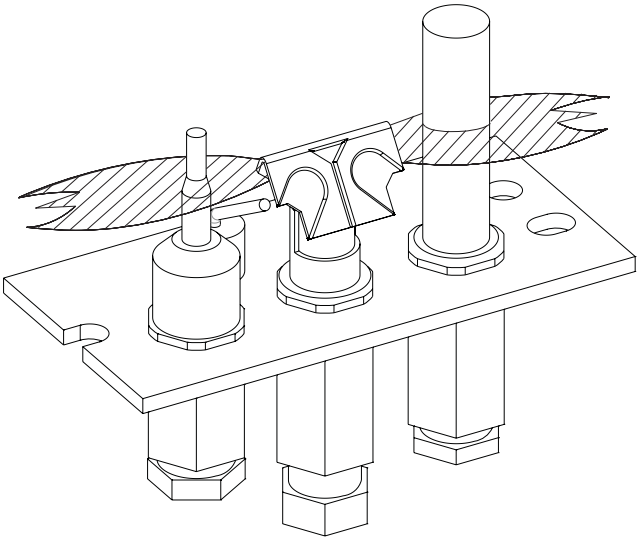
**Figure 49**

# STANDING PILOT LIGHTING INSTRUCTIONS

## FOR YOUR SAFETY READ BEFORE LIGHTING

⚠ WARNING: If you do not follow these instructions exactly, a fire or explosion may result causing property damage, personal injury or loss of life.

A. This appliance has a pilot which must be lighted by hand. When lighting the pilot, follow these instructions exactly.

B. Before lighting smell all around the appliance area for gas. Be sure to smell next to the floor because some gas is heavier than air and will settle on the floor.

What To Do If You Smell Gas
- Do not try to light any appliance.
- Do not touch any electrical switch;
- Do not use any phone in your building.
- Immediately call your gas supplier from a neighbor's phone. Follow the gas supplier's instructions.
- If you cannot reach your gas supplier, call the fire department.

C. Use only your hand to push in or turn the gas control knob. Never use tools. If the knob will not push in or turn by hand, don't try to repair it; call a qualified service technician. Force or attempted repair may result in a fire or explosion.

D. Do not use this appliance if any part has been under water. Immediately call a qualified service technician to inspect the appliance and to replace any part of the control system and any gas control which has been under water.

## LIGHTING INSTRUCTIONS

1. Stop! Read the safety information above.
2. Set REMOTE/OFF/ON switch to OFF.
3. Turn off all electric power to the appliance (if applicable).
4. Lower bottom louver assembly.
5. Push in gas control knob slightly and turn clockwise to "OFF."

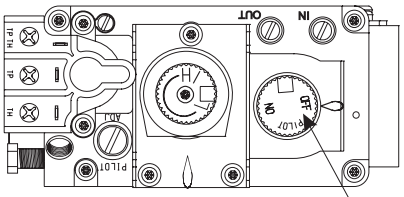


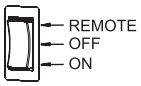


Note: Knob cannot be turned from "PILOT" to "OFF" unless knob is pushed in slightly. Do not force.

6. Wait ten (10) minutes to clear out any gas. Then smell for gas, including near the floor. If you then smell gas, STOP! Follow "B" in the safety information above. If you do not smell gas, go to the next step.
7. Find pilot - Follow metal tube from gas control. The pilot is behind the burner on the right side.
8. Turn gas control knob counterclockwise to "PILOT."

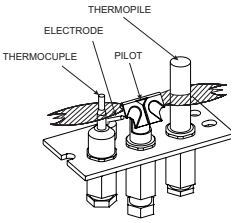


9. Push in control knob all the way and hold in. Repeatedly push the piezo ignitor button until the pilot is lit. Continue to hold the control knob in the for about one (1) minute after the pilot is lit. Release knob, and it will pop back up. Pilot should remain lit. If it goes out, repeat steps 5 through 9.
   - If the control knob does not pop up when released, STOP and IMMEDIATELY call a qualified service technician or gas supplier.
   - If the pilot will not stay lit after several tries, turn the gas control knob to "OFF" and call your service technician or gas supplier.
10. Turn gas control knob counterclockwise to "ON."
11. Close bottom louver assembly.
12. Turn on all electric power to the appliance (if applicable).
13. Set REMOTE/OFF/ON switch to desired setting.

## TO TURN OFF GAS TO FIREPLACE

1. Set REMOTE/OFF/ON switch to OFF.
2. Turn off all electric power to the appliance if service is to be performed (if applicable).
3. Lower bottom louver assembly.
4. Push in gas control knob slightly and turn clockwise to "OFF." Do not force.
5. Close bottom louver assembly.

# STANDING PILOT WIRING

**For Standing Pilot Ignition Wiring**

**Appliance Requirements**

**⚠ WARNING**

**DO NOT CONNECT 110-120 VAC TO THE GAS CONTROL VALVE OR THE APPLIANCE WILL MALFUNCTION AND THE VALVE WILL BE DESTROYED.**

**Optional Wall Switch**

Position the wall switch in the desired position on a wall. Run a maximum of 25 feet (7.8m) or less length of 18 A.W.G. minimum wire and connect it to the fireplace valve pigtails.

**⚠ WARNING**

**DO NOT CONNECT THE 110-120 VAC TO THE WALL SWITCH OR THE CONTROL VALVE WILL BE DESTROYED.**

**⚠ WARNING**

**LABEL ALL WIRES PRIOR TO DISCONNECTION WHEN SERVICING CONTROL. WIRING ERRORS CAN CAUSE IMPROPER AND DANGEROUS OPERATION. VERIFY PROPER OPERATION AFTER SERVICING.**

## STANDING PILOT WIRING DIAGRAM

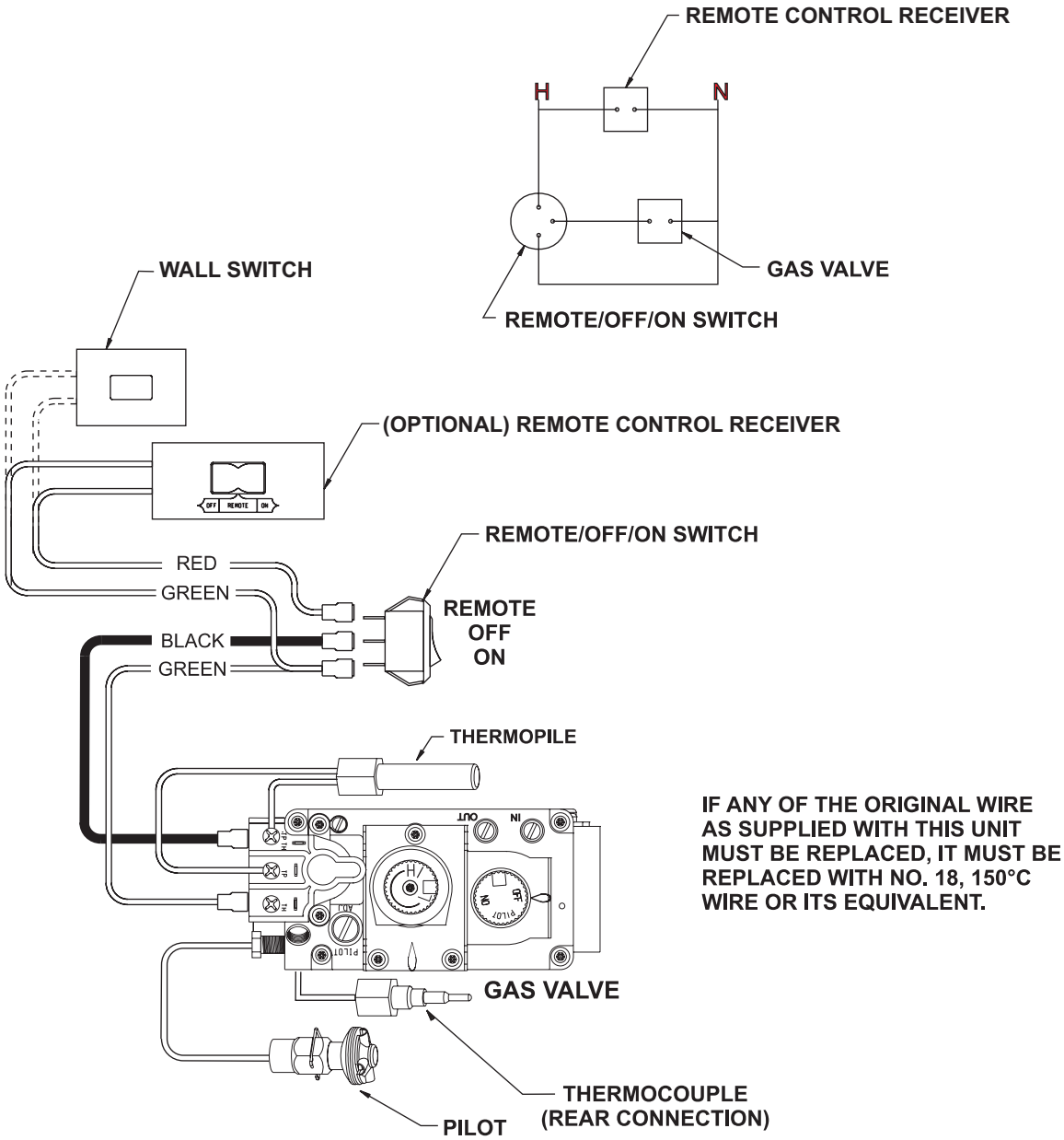

# STANDING PILOT TROUBLESHOOTING

**With proper installation and maintenance, your new Direct Vent Gas Fireplace will provide years of trouble-free service. If you do experience a problem, refer to the Trouble Shooting Guide below. This guide will assist a qualified service person in the diagnosis of problems and the corrective action to be taken.**

1. **Spark ignitor will not light pilot after repeated triggering of piezo ignitor button.**
   a. Ensure the electrode wire (piezo wire) is properly connected to the piezo and electrode.
   b. Defective ignitor (no spark electrode)
   —Check for spark at electrode and pilot; if no spark and electrode wire is properly connected, replace ignitor.
   c. No gas or low gas pressure.
   —Check remote shut off valves from fireplace. Usually there is a valve near the main. There can be more than one (1) valve between the fireplace and main.
   —Low pressure can be caused by a variety of situations such as a bent line, too narrow diameter of pipe, or low line pressure. Consult with plumber or gas supplier.
   d. No LP in tank.
   —Check LP (propane) tank. Refill tank.
2. **Pilot will not stay lit after carefully following lighting instructions.**
   a. Defective thermocouple.
   —Check that pilot flame impinges on thermocouple. Clean and/or adjust pilot for maximum flame impingement.
   —Ensure the thermocouple connection at the gas valve is fully inserted and tight (hand tight plus 1/4 turn). Faulty thermocouple if reading is below specified minimum of 15 millivolts.
   —Disconnect the thermocouple from the valve, place one millivolt meter lead wire on the end of the thermocouple and the other millivolt meter lead wire on the thermocouple copper wire. Start the pilot and hold the valve knob in. If the millivolt reading is less than 15 millivolt, replace the thermocouple.
   b. Defective valve.
   —If thermocouple is producing more than 15 millivolts, replace faulty valve.
3. **Pilot burning, no gas to burner, valve knob "ON", REMOTE/OFF/ON switch "ON."**
   a. REMOTE/OFF/ON switch, wall switch, remote control or wires defective.
   —Check REMOTE/OFF/ON switch and wires for proper connections. Place jumper wires across terminal at switch. If burner comes on, replace defective switch. If OK, place jumper wires across switch wires at gas valve-if burner comes on, wires are faulty or connections are bad.
   b. Thermopile may not be generating sufficient millivolts.
   —If the pilot flame is not close enough physically to the thermopile, adjust the pilot flame.
   —Be sure the wire connections from the thermopile at the gas valve terminals are tight and the thermopile is fully inserted into the pilot bracket.
   —Check the thermopile with a millivolt meter. Take the reading at TH-TP & TP terminals of the gas valve. The meter should read 350 millivolts minimum, while holding the valve knob depressed in the PILOT position, with the pilot lit, and the REMOTE/OFF/ON switch in the OFF position. Replace the faulty thermopile if the reading is below the specified minimum.
   —With the pilot in the ON position, disconnect the thermopile leads from the valve. Take a reading at the thermopile leads. The reading should be 350 millivolts minimum. Replace the thermopile if the reading is below the minimum.
   c. Defective valve.
   —Turn valve knob to ON. Place REMOTE/OFF/ON switch to ON. Check with millivolt meter at thermopile terminals. Millivolt meter should read greater than 200 millivolts. If the reading is okay and the main burner does not ignite, replace the gas valve.
   d. Plugged main burner orifice.
   —Check main burner orifice for blockage and remove.
4. **Frequent pilot outage problem.**
   a. Pilot flame may be too high or too low, or blowing (high), causing pilot safety to drop out.
   —Clean and adjust flame for maximum flame impingement on the thermocouple. Follow lighting instructions carefully.
5. **The pilot and main burner extinguish while in operation.**
   a. No LP (Propane) in tank.
   Check LP (Propane) tank. Refill fuel tank.
   b. Inner vent pipe leaking exhaust gases back into system.
   —Check for leaks.
   c. Glass too loose, gasket leaks in corners after usage.
   —Be certain glass assembly is installed correctly.
   d. Horizontal vent improperly pitched.
   —The horizontal vent cap should slope down only enough to prevent any water from entering the unit. The maximum downwards slope is 1/4 inch.
   e. Bad thermopile or thermocouple.
   —Replace if necessary.
   f. Improper vent cap installation.
   —Check for proper installation and freedom from debris or blockage.
6. **Glass soots, and/or soot deposits collected internally.**
   a. Flame impingement on decorative glass.
   —Check and adjust glass positioning. See Page 32. Contact Empire Comfort Systems, Inc.
   b. Debris around throat of main burner.
   —Inspect the opening at the base of the main burner. It is imperative that NO material be placed in this opening.
7. **Flame burns blue and lifts off main burner.**
   a. Insufficient oxygen being supplied.
   —Check to make sure vent cap is installed properly and free of debris. Make sure that vent system joints are tight and have no leaks.
   —Check to make sure that no material has been placed at the main burner base.

**5.25 VDC ELECTRONIC CONTROL VALVE**

The electronic control valve system includes the ability to switch the pilot from a standing pilot mode to an intermittent pilot mode.

- **IPI Mode** - In the Intermittent Pilot mode, when the unit is turned ON, it will cause spark to the pilot, light the pilot, then allow the burner to light. When the unit is turned to OFF, both the burner and pilot will be OFF.
- **CPI Mode** - In the Continuous Pilot mode, the pilot remains ON continuously even when the burner is turned OFF.

Note: A small pilot selector switch is located on the module tray that is used to switch from IPI (left position) to the CPI (right position). See Figure 23.

When the unit is turned to ON, the electrical current will energize a spark to the pilot igniter. Once the pilot sensor heats up (after a few seconds), the valve will be energized, allowing gas to flow to the burner.

1. Follow the SAFETY and LIGHTING INSTRUCTIONS for Intermittent Pilot controls found in this manual, and on labels found in the control compartment located in the lower cavity of the appliance.
2. During the operating season (or in power outage periods), it is recommended that the pilot remain in the CPI (standing pilot mode) to reduce cold start issues, and/or conserve battery backup power during a power outage.
3. The gas valve has inlet and outlet pressure taps as shown in Figure 23. Refer to page 9 for gas pressure requirements.

**Note:** The gas control has a manual HI/LO flame adjustment knob (regulator) that allows you to increase or decrease the height of the burner flame. See Figure 23. Rotate the HI/LO knob counterclockwise to “HI” to increase the flame height, and clockwise to “LO” to decrease the flame height.

**OPTIONAL REMOTE CONTROLS**

Optional remote controls are available for use with this appliance. It is recommended that the remote receiver be placed either in a wall outlet box with extended wiring, on the fireplace hearth, behind the left side surround panel, or in the control compartment area as far forward in the fireplace as possible.

The placement options for the remote receiver are given to allow flexibility, however battery life will be extended when the receiver is placed in cooler areas.

To connect the remote receiver to the appliance, first disconnect the ON/OFF switch wires from the white and green wire connectors and connect the wires from the remote receiver to the green and white wire connectors. See Page 37.

Follow the instructions included with the remote control for programming and other operational information.

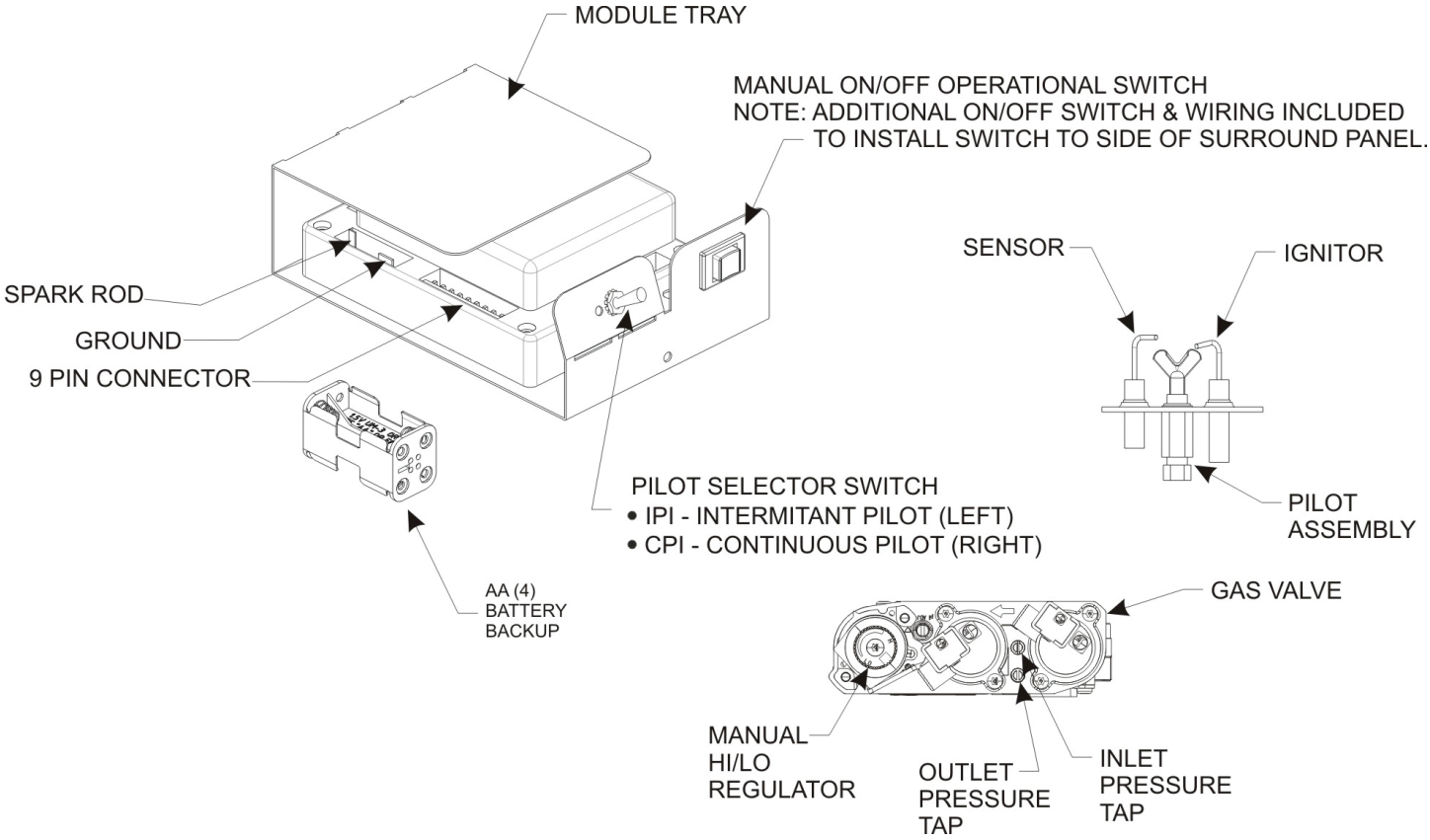


**Figure 23**

# IPI ELECTRONIC SYSTEM WIRING DIAGRAM

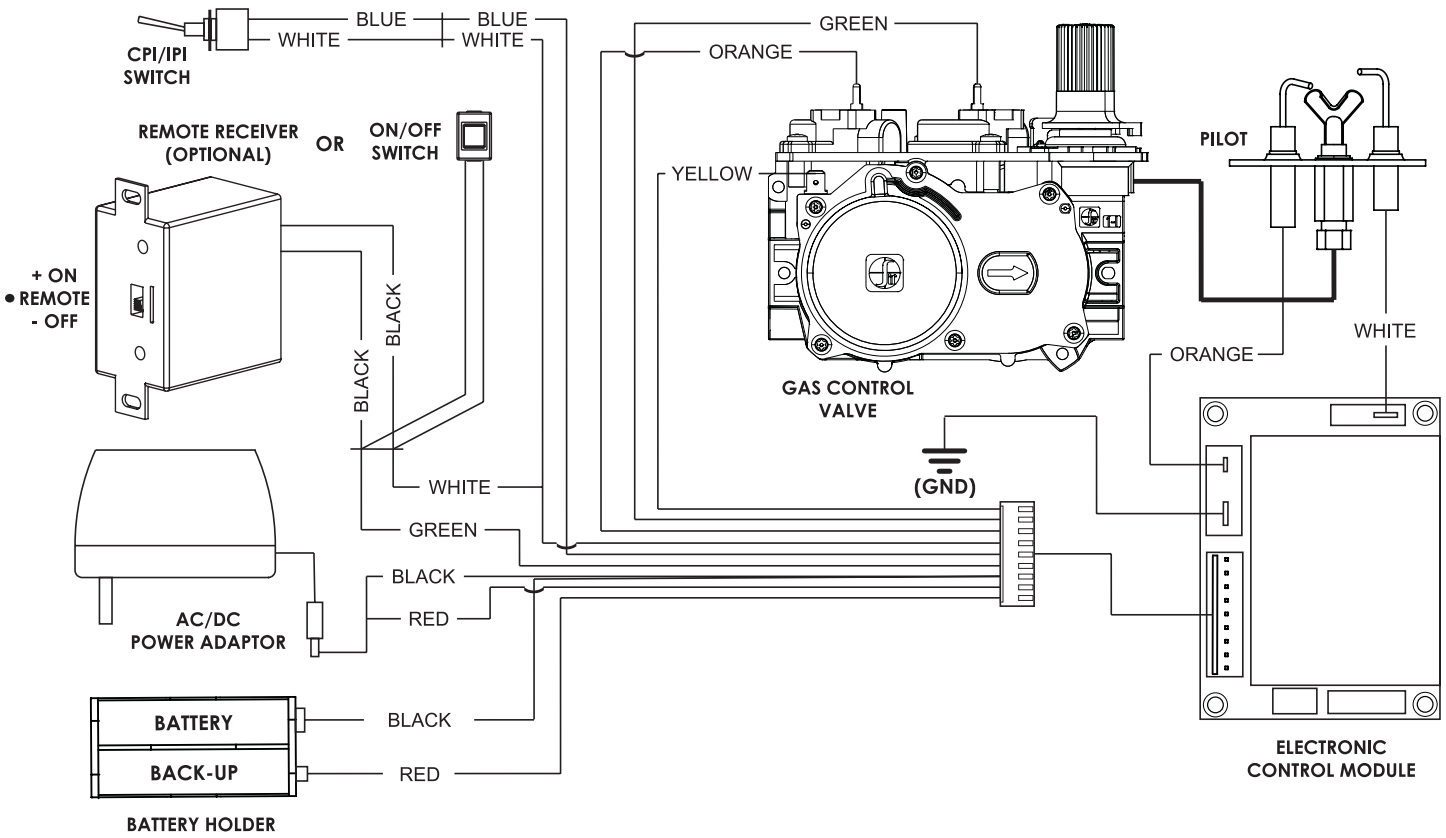


If any of the original wire as supplied with this unit must be replaced, it must be replaced with equivalent gauge and temperature rated wire.

This appliance is only for use with the type of gas indicated on the rating plate and may be installed in an aftermarket, permanently located, manufactured (mobile) home where not prohibited by local codes. This appliance is not convertible for use with other gases, unless a certified kit is used.

**CAUTION:** Do not operate the appliance with panel(s) removed, cracked or broken. Replacement of the panel(s) should be done by a licensed or qualified service person.

**WARNING:** Improper installation, adjustment, alteration, service or maintenance can cause property damage, personal injury or loss of life. Installation and service must be performed by a qualified installer, service agency or the gas supplier.

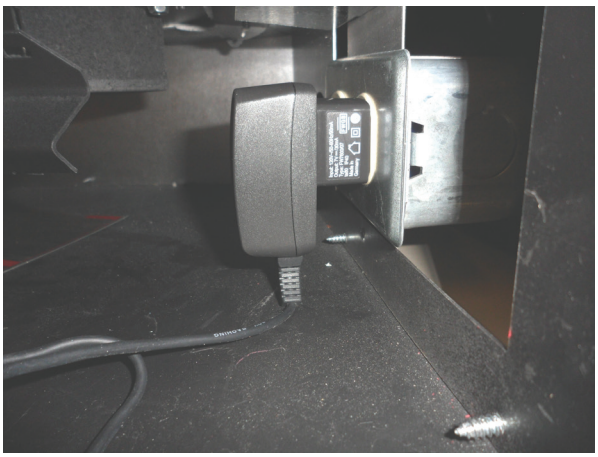

**AC/DC Adapter**
To install the AC/DC Adapter, connect the round male connector to the matching connector on the wiring harness (Black/red wires) as shown in the wiring diagram above. Plug the AC/DC Adapter into the Junction Box Receptacle as pictured with the power cord touching the bottom of the fireplace.

# INTERMITTENT PILOT LIGHTING INSTRUCTIONS

## FOR YOUR SAFETY READ BEFORE LIGHTING

⚠ WARNING: If you do not follow these instructions exactly, a fire or explosion may result causing property damage, personal injury or loss of life.

A. This appliance has a pilot which can be lighted with the manual on/off switch, a remote control, or by switching the receiver switch to the “ON” position. When lighting the pilot, follow these instructions exactly.

B. BEFORE LIGHTING smell all around the appliance area for gas. Be sure to smell next to the floor because some gas is heavier than air and will settle on the floor.
**WHAT TO DO IF YOU SMELL GAS**
Do not try to light any appliance. Do not touch any electrical switch. Do not use any phone in your building. Immediately call your gas supplier from a neighbor’s phone. Follow the gas supplier’s instructions. If you can not reach your gas supplier, call the fire department.

C. Use only the remote control or manual remote receiver switch to operate the gas valve. Never use tools. If valve does not operate, don’t try to repair it, call a qualified service technician. Force or attempted repair may result in a fire or explosion.

D. Do not use this appliance if any part has been under water. Immediately call a qualified service technician to inspect the appliance and to replace any part of the control system and any gas control which has been under water.

## LIGHTING INSTRUCTIONS

1. STOP! Read the safety information above.
2. Turn OFF electric power to the appliance.
3. Remove front surround panel assembly or bottom louver if included.
4. Turn gas cock counterclockwise ↺ to “On” position.
5. Wait ten (10) minutes to clear out any gas. Then smell for gas, including near the floor. If you smell gas, STOP! Follow “B” in the safety information above on this page. If you do not smell gas, go to the next step.
6. Turn ON electric power to the appliance.
7. Find pilot - Follow metal tube from gas control. The pilot is behind the burner on the right side.
8. Turn main flame to on. If the pilot does not light within 60 seconds, stop and go to Step 5.
9. Refer to remote control instructions for detailed information, control features, and operation. Note: There is a CPI/IPI switch that allows for a continuous standing pilot mode or an intermittent pilot mode. See appliance manual for location of this switch. If the pilot or burner does not stay lit (in the standing pilot mode), stop and immediately call a qualified service technician or gas supplier.
10. If the burner or pilot does not operate properly after several tries, turn the gas cock clockwise ↻ to “OFF” and call your service technician or gas supplier.
11. Replace the front surround assembly or close bottom louver assembly.
12. Operation of the gas valve is controlled by a manual on/off switch or a hand held remote control. Refer to remote instructions for detailed operation information.

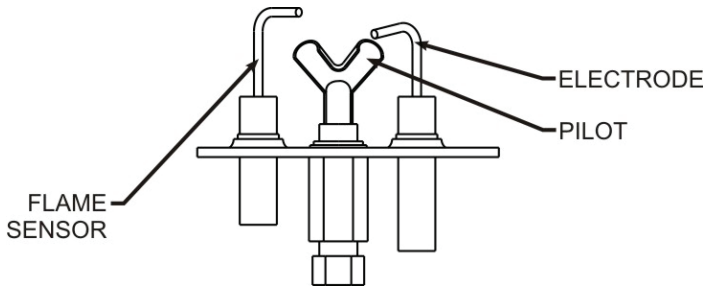


**GAS COCK**

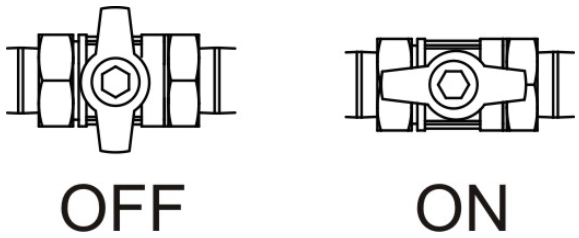


## TO TURN OFF GAS TO FIREPLACE

1. Turn off all electric power to the appliance if service is to be performed (if applicable).
2. Gain access to control compart. Remove surround panel assembly if necessary.
3. Locate On/Off gas cock and turn clockwise to ↻ “OFF”. Do not force.
4. Close bottom louver assembly, if included.

# INTERMITTENT PILOT CONTROL SYSTEM TROUBLESHOOTING

**Brief Description of the Components**

The gas valve is fitted with a manual HI/LO knob to allow for manual modulation of the gas outlet pressure to the appliance burner. The controls are designed to be used with either LPG or Natural Gas and can be converted by use of an OEM supplied conversion kit.

The Digital Fireplace Control (DFC) is an automatic gas ignition system based on a single microcontroller core. This control manages all functions related to ignition, flame sensing and supervision for atmospheric applications.

The DFC can be set to provide continuous or intermittent ignition control sequences and flame monitoring with safety shutdown in case of failure.

The DFC is set up as a stand alone (AC powered system with battery back up. See Lighting Instructions on page 38 and Wiring Diagram on page 37.

Troubleshooting

Before proceeding with the procedures in the following troubleshooting table, verify that the power supply (AC/DC adapter) is present and that the batteries inside the receiver and/or optional battery pack are fresh and installed with correct polarity.

Make sure all the connections between the wire harnesses and system components are proper and positive.

Verify that the static inlet pressure meets the manufacturer's recommended inlet pressure. If necessary adjust the line pressure regulator.

If the recommended actions for the following troubleshooting chart do not help to address the problem consider replacing wiring harnesses.

**WARNING:**
**Any actions performed on the gas valve must be performed in accordance with this instruction manual. Likewise, any actions performed on the DFC or other system components must be done in accordance with the individual component instructions.**
**Replacement of components must be performed in accordance with this instructions manual.**

# INTERMITTENT PILOT CONTROL SYSTEM TROUBLESHOOTING

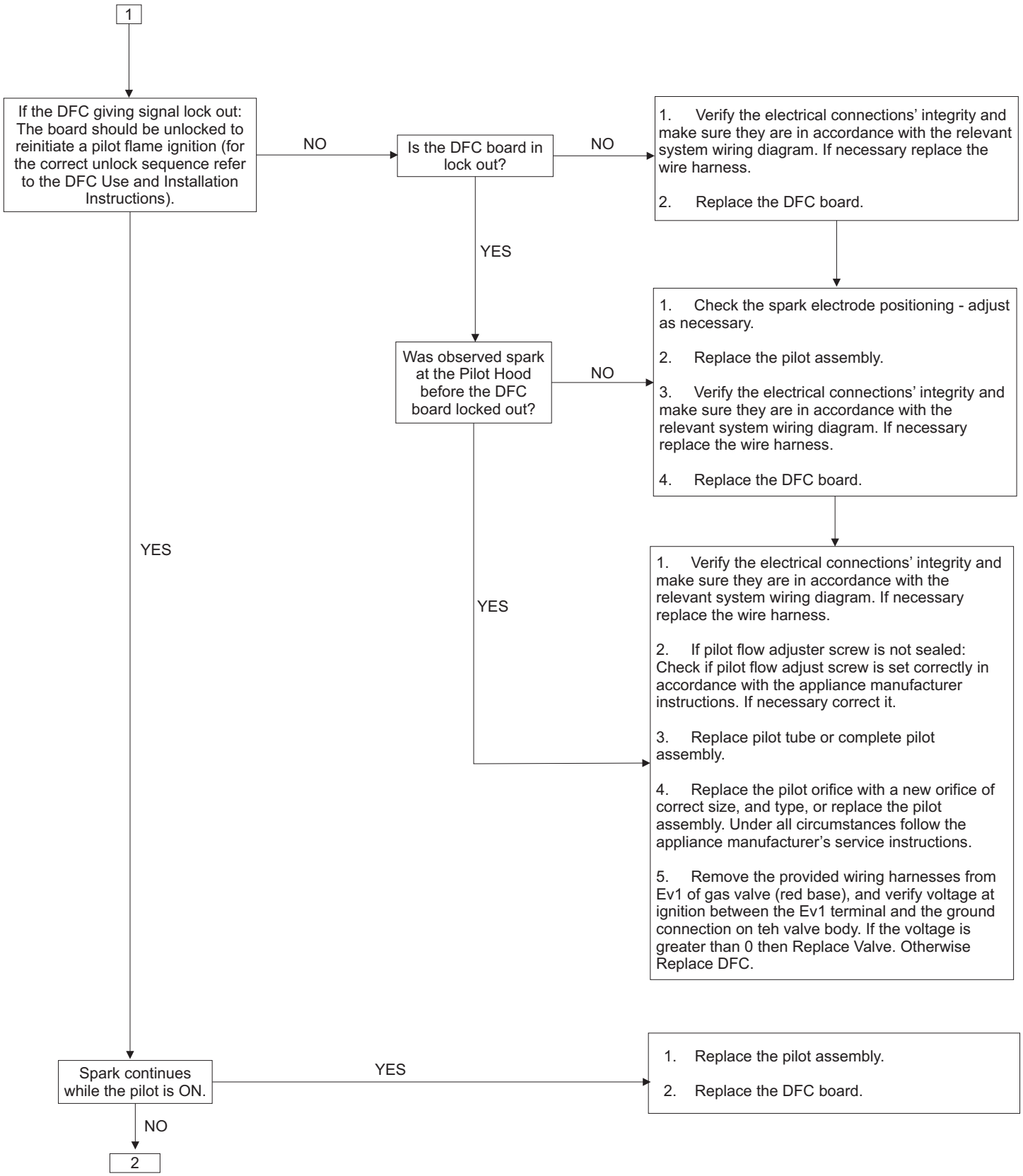

# INTERMITTENT PILOT CONTROL SYSTEM TROUBLESHOOTING

2

**Main burner lights when the pilot only should light.**

YES →

1. Replace DFC board.
2. Replace the gas valve.

NO ↓

**Pilot holds the flame?.**

NO →

1. Verify the pilot flame fully engulfs the tip of the sense electrode. If not replace the pilot assembly.
2. Replace the pilot assembly.
3. Carefully clean the electrical connections of the sense cable, and the DFC board sense cable connection.
4. Replace the sense cable, or the cable-sense electrode assembly, or the pilot assembly.
5. Verify the pilot is properly grounded.
6. Replace the pilot orifice with a new orifice of correct size, and type, or replace the pilot assembly.
7. If pilot flow adjuster screw is not sealed, correct it.

YES ↓

**Main burner ignites?**

NO →

1. Verify the electrical connections' integrity and make sure they are in accordance with the relevant system wiring diagram. If necessary replace the wire harness.
2. Check if the optional remote transmitter is in "thermostat" or "on" mode and verifyt there is a call for heat (f using a thermostat remote). Adjust the setting for heat.
3. Verify that the pilot hood is properly fitted and a pilot flame is directed to properly ignite the main appliance burner.
4. Replace the main burner orifice with a new orifice of correct size and type, or replace the pilot assembly. Under all circumstances follow the service instructions.
5. Remove the provided wiring harnesses from EV2 of gas valve (red base), and verify voltage at ignition between the EV1 terminal and the ground connection on the valve body.
   5.1 If the voltage is greater than 0 then Replace Valve.
   5.2 Or Replace DFC.
6. Check the pressure at the outlet pressure test point out according to the manufacturer's instruction. If not in accordance, replace the gas valve.

YES ↓

**Main burner remains ON**

NO →

1. Verify the electrical connections' integrity and make sure they are in accordance with the relevant system wiring diagram. If necessary replace the wire harness.
2. Check the pressure at the outlet pressure test point out according the manufacturer's instruction. If not in accordance replace the gas valve.
3. With the system in the OFF position, connect the voltmeter between the EV2 terminal (green base) on the valve, and the ground on the valve body.
   Turn the system ON, let pilot light, and observe the following voltage sequence: once the pilot flame is proved, the voltage on EV2 should spike to approx. 5 VdC for approx. 2 sec and then drop to approx. 0.6 VdC continuously.
   3.1 If the sequence is respected, replace the gas valve.
   3.2 If the sequence is not respected, replace the DFC board.

↓

**Main burner modulates properly?**

→

1. Replace the main burner orifice with a new orifice of correct size (partial blockage possible). Verify that the main burner flame modulates. If it does not modulate replace the gas valve.
2. Verify that the gas valve outlet pressure limits are in accordance with the manufacturer specifications. If not replace the gas valve.

**FOR MANUAL HI/LO VERSION**

3. Verify the flame changes while rotating the HI/LO knob on the front of the gas valve. If there is no change replace the gas valve.

# MAINTENANCE AND SERVICE

Although the frequency of servicing and maintenance will depend on use and the type of installation, you should have a qualified service technician perform an appliance checkup at the beginning of each heating season. Specific guidelines regarding each appliance maintenance task are listed below.

***IMPORTANT: TURN OFF THE GAS BEFORE SERVICING YOUR APPLIANCE.***

**Cleaning Burner and Controls**

**Frequency:** Once annually.

**By:** Qualified service technician.

**Task:** Brush or vacuum the control compartment, fireplace logs and burner areas surrounding the logs.

**Checking Flame Patterns, Flame Height**

**Frequency:** Periodically.

**By:** Qualified service technician/Home owner.

**Task:** Make a visual check of your fireplace's flame patterns.

Make sure the flames are steady - not lifting or floating. The thermopile/thermocouple (standing pilot) tips should be covered with flame. **See Figure 49.**

**Checking Vent System**

**Frequency:** Before initial use and at least annually thereafter, more frequently if possible.

**By:** Qualified service technician/Home owner.

**Task:** Inspect the external vent cap on a regular basis to ensure that no debris is interfering with the flow of air. Inspect entire vent system for proper function.

**NOTICE: Prior to operating this unit, be sure to clean the interior porcelain coated liner panels and glass door with a soft clean cloth. Due to normal manufacturing processes, fingerprints along with excess sealing materials may be present and should be removed. When cleaning, do not use abrasives on the porcelain liners or the glass door assembly.**

**Cleaning**

Use a soft brush attachment on a vacuum cleaner to gently remove dust or soot deposits from liners and burner.

**Cleaning Glass Door**

**Frequency:** After the first 3 to 4 hours of use. As necessary after initial cleaning.

**By:** Home owner.

**Task:** Remove and clean glass after the first 3 to 4 hours of use. After the initial cleaning, clean as necessary. Film deposits on the inside of the glass door should be cleaned off using a household glass cleaner.

**Caution**: Use only ammonia free, non-abrassive glass cleaners.

| ⚠ CAUTION |
| --- |
| **DO NOT handle or attempt to clean the door when it is hot and DO NOT use abrasive cleaners.** |

**Glass Door Replacement**

Do not operate the fireplace if the high-temperature ceramic glass is cracked or broken.

Do not attempt to replace the ceramic glass panel. A complete replacement glass door assembly should be ordered as listed in the Parts List on page 40, if needed.

Do not use substitute materials for replacement of glass door components.

Do not abuse the glass door by striking the glass.

Do not abuse the glass door by slamming or forcing the door shut.

When installing the glass door assembly, place the top door flange over the firebox top, center left to right, then gently swing the door bottom inward and secure with the two (2) spring loaded door latches to top flange of door frame. Secure two (2) additional spring clamps at the bottom door frame flange.

# ACCESSORIES

The following accessory parts can be obtained from your Empire Comfort Systems dealer. If you need additional information beyond what your dealer can furnish, contact Empire Comfort Systems Inc., Nine Eighteen Freeburg Ave., Belleville, Illinois 62220.

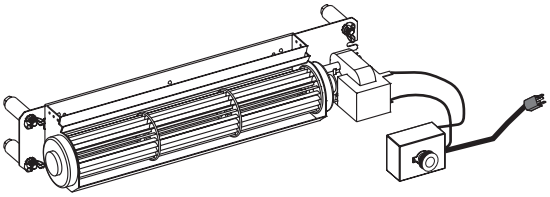

FBB8 Blower

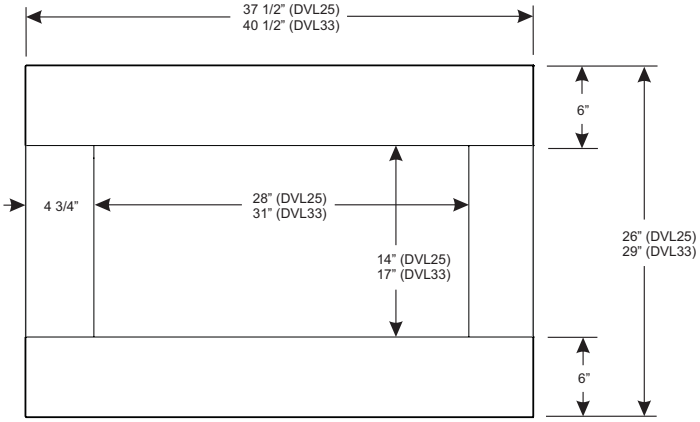


Standard Contemporary Surround
(Available in black or black and stainless)

# DECORATIVE ACCESSORIES

| Style | Model Number |
|---|---|
| 4-Sided Surround 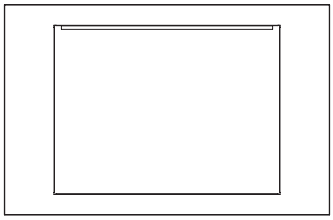 | DS(25,33)66BL<br>• Black |
| Eclipse 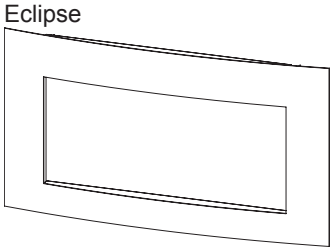 | DFB(25,33)R(BL,HP,SS)<br>• Black<br>• Hammered Pewter<br>• Stainless Steel<br><br>Must also use 4-sided surround |

**OPTIONAL DECORATIVE GLASS ACCESSORIES**

Contact your dealer for available optional decorative glass media recommended for use with this fireplace model. See below for the square foot area of the burner cover. Use the square foot area information as a guide to order the proper amount of media material recommended.

| Model | Burner Cover Area (Sq. Ft.) |
|---|---|
| DVL25FP | 1.25 |
| DVL33FP | 1.60 |

# PARTS VIEW

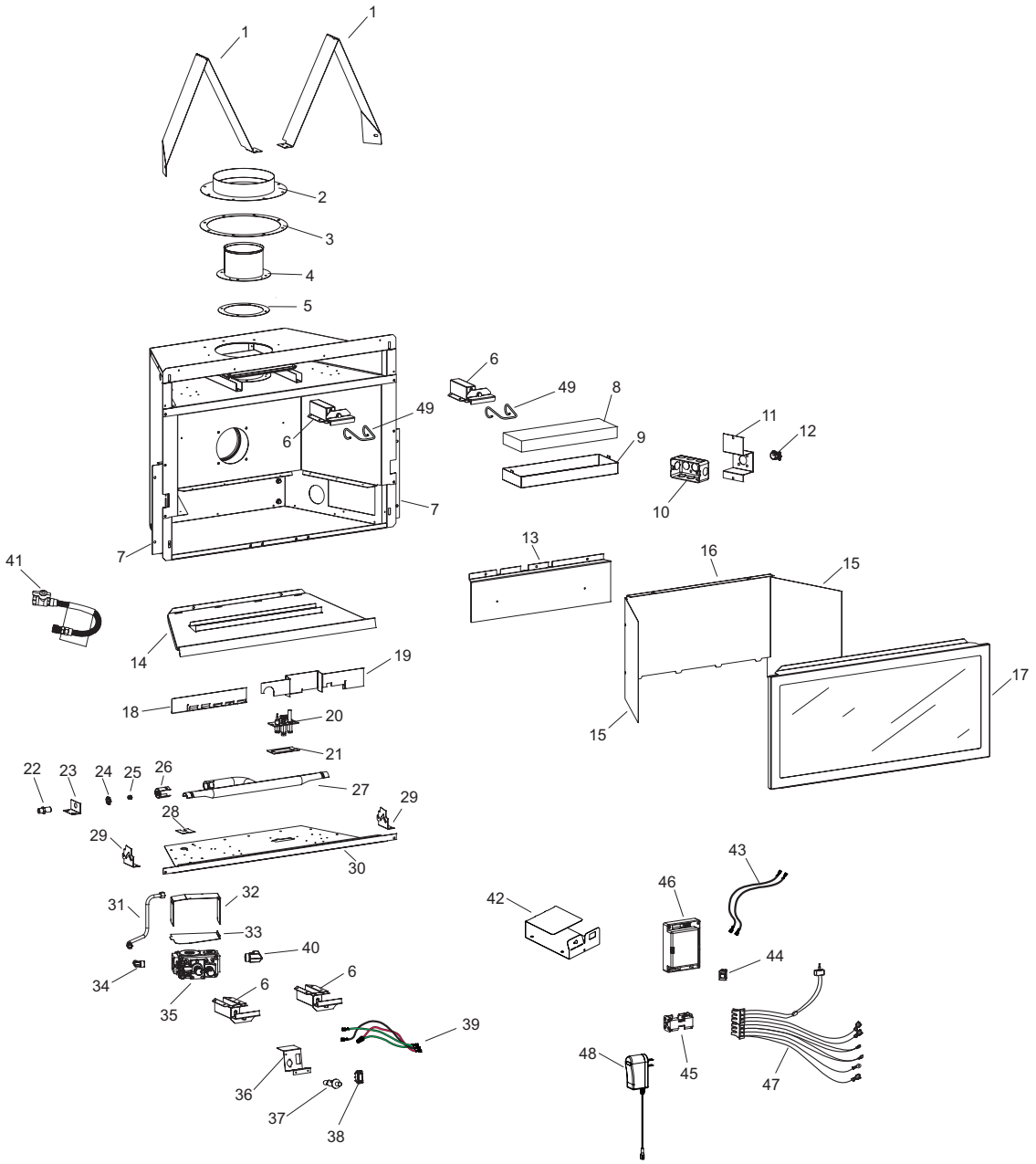


# PARTS LIST

| INDEX NO. | PART NO. | | | | DESCRIPTION |
|---|---|---|---|---|---|
| | DVL25FP32(N,P) | DVL33FP32(N,P) | DVL25FP72(N,P) | DVL33FP72(N,P) | |
| 1 | 28076 | 28076 | 28076 | 28076 | TOP STANDOFF |
| 2 | R7566 | R7566 | R7566 | R7566 | INLET VENT ADAPTOR |
| 3 | R7573 | R7573 | R7573 | R7573 | INLET VENT GASKET |
| 4 | 17155 | 17155 | 17155 | 17155 | FLUE OUTLET ASSEMBLY |
| 5 | M163 | M163 | M163 | M163 | GASKET, FLUE CONNECTOR |
| 6 | 16223 | 27718 | 16223 | 27718 | SPRING RETAINER ASSEMBLY |
| 7 | 30577 | 30577 | 30577 | 30577 | NAILING FLANGE |
| 8 | R10854 | R10854 | R10854 | R10854 | INSULATION, 1.250 X 4 X 12 |
| 9 | 28065 | 28065 | 28065 | 28065 | PAN, INSULATION |

# PARTS LIST

| INDEX NO. | PART NO. | | | | DESCRIPTION |
|---|---|---|---|---|---|
| | DVL25FP32(N,P) | DVL33FP32(N,P) | DVL25FP72(N,P) | DVL33FP72(N,P) | |
| 10 | R3490 | R3490 | R3490 | R3490 | JUNCTION BOX |
| 11 | 27730 | 27730 | 27730 | 27730 | JUNCTION BOX MOUNTING BRACKET |
| 12 | R7571 | R7571 | R7571 | R7571 | 3/8” ROMEX CONNECTOR |
| 13 | 27666 | 27691 | 27666 | 27691 | LOG SHELF |
| 14 | 27726 | 28070 | 27726 | 28070 | BURNER COVER, PORCELAIN |
| 15 | 27668 | 27679 | 27668 | 27679 | LINER SIDE, PORCELAIN |
| 16 | 27670 | 27681 | 27670 | 27681 | LINER REAR, PORCELAIN |
| 17 | 27712 | 27713 | 27712 | 27713 | GLASS DOOR FRAME ASSEMBLY |
| 18 | 27731 | 27856 | 27731 | 27856 | RESTRICTOR, BURNER - LEFT |
| 19 | 27855 | 27857 | 27855 | 27857 | RESTRICTOR, BURNER - RIGHT |
| 20a | R10737 | R10737 | R10423 | R10423 | PILOT ASSEMBLY, NAT |
| 20b | R10738 | R10738 | R10424 | R10424 | PILOT ASSEMBLY, LPG |
| 21 | M173 | M173 | M173 | M173 | GASKET, PILOT |
| 22 | P212 | P212 | P212 | P212 | FITTING, ORIFICE |
| 23 | 27086 | 27086 | 27086 | 27086 | BURNER END SUPPORT |
| 24 | R7575 | R7575 | R7575 | R7575 | JAMB NUT |
| 25a | P288 (2.10mm) | P286 (#42) | P288 (2.10mm) | P286 (#42) | ORIFICE (NAT. GAS) |
| 25b | P182 (# 55) | P208 (1.45mm) | P182 (# 55) | P208 (1.45mm) | ORIFICE (LP GAS) |
| 26 | R7624 | R7624 | R7624 | R7624 | AIR SHUTTER |
| 27 | R10732 | R10879 | R10732 | R10879 | TUBE BURNER |
| 28 | 11269 | 11269 | 11269 | 11269 | GAS LINE BRACKET |
| 29 | 28067 | 28067 | 28067 | 28067 | BURNER SUPPORT - RIGHT |
| 30 | 27659 | 28066 | 30950 | 30951 | BURNER BASE |
| 31 | 28074 | 28075 | 30585 | 30587 | TUBING ASSEMBLY, INLET |
| 32 | 28063 | 28063 | 30589 | 30589 | VALVE BRACKET |
| 33 | 28064 | 28064 | 30588 | 30588 | SHIELD, VALVE |
| 34 | R6207 | R6207 | R6207 | R6207 | ELBOW, 5/16 X 3/8 90 DEGREE |
| 35a | R7577 | R7577 | R11125 | R11125 | VALVE, SIT GAS - NAT |
| 35b | R7578 | R7578 | R11126 | R11126 | VALVE, SIT GAS - LP |
| 36 | 22953 | 22953 | - | - | PIEZO BRACKET |
| 37 | R9760 | R9760 | - | - | IGNITOR, PIEZO W/RED |
| 38 | R3436 | R3436 | - | - | SWITCH, REMOTE OFF/ON |
| 39 | R10947 | R10947 | - | - | WIRE ASSEMBLY |
| 40 | R10882 | R10882 | - | - | ELBOW, 90 DEGREE BRASS 3/8 NPT X 3/8 FLARE |
| 41 | R10961 | R10961 | R10961 | R10961 | FLEXLINE W/SHUTOFF VALVE |
| 42 | - | - | 29382 | 29382 | TRAY, MODULE |
| 43 | - | - | R2667 | R2667 | WIRE 5 1/2” BLACK (QTY. 2) |
| 44 | - | - | R2522 | R2522 | ON/OFF SWITCH |
| 45 | - | - | R11122 | R11122 | BATTERY HOLDER |
| 46 | - | - | R11127 | R11127 | DFC CONTROL BOARD |
| 47 | - | - | R11123 | R11123 | WIRE HARNESS |
| 48 | - | - | R11128 | R11128 | AC ADAPTOR, 7.0 VDC |
| 49 | R11181 | R11181 | R11181 | R11181 | LATCH EXTENSION (QTY. 2) |

**USE ONLY MANUFACTURER’S REPLACEMENT PARTS. USE OF ANY OTHER PARTS COULD CAUSE INJURY OR DEATH.**

# MASTER PARTS DISTRIBUTOR LIST

To Order Parts Under Warranty, please contact your local Empire dealer. See the dealer locator at www.empirecomfort.com. To provide warranty service, your dealer will need your name and address, purchase date and serial number, and the nature of the problem with the unit.

To Order Parts After the Warranty Period, please contact your dealer or one of the Master Parts Distributors listed below. This list changes from time to time. For the current list, please click on the Master Parts button at www.empirecomfort.com. Please note: Master Parts Distributors are independent businesses that stock the most commonly ordered Original Equipment repair parts for Heaters, Grills, and Fireplaces manufactured by Empire Comfort Systems Inc.

**Dey Distributing**
1401 Willow Lake Boulevard
Vadnais Heights, MN 55101

**Phone:** 651-490-9191
**Toll Free:** 800-397-1339
**Website:** www.deydistributing.com
**Parts: Heater, Hearth and Grills**

**Victor Division of F. W. Webb Company**
200 Locust Street
Hartford, CT 06114

**Phone:** 860-722-2433
**Toll Free:** 800-243-9360
**Fax:** 860-293-0479
**Toll Free Fax:** 800-274-2004
**Websites:** www.fwwebb.com & www.victormfg.com
**Parts: Heater, Hearth and Grills**

**East Coast Energy Products**
10 East Route 36
West Long Branch, NJ 07764

**Phone:** 732-870-8809
**Toll Free:** 800-755-8809
**Fax:** 732-870-8811
**Website:** www.eastcoastenergy.com
**Parts: Heater, Hearth and Grills**

**Able Distributors**
2501 North Central Avenue
Chicago, IL 60639

**Phone:** 773-889-5555
**Toll Free:** 800-880-2253
**Fax:** 773-466-1118
**Website: www. abledistributors.com**
**Parts: Heater**

# HOW TO ORDER REPAIR PARTS

**Parts Not Under Warranty**

Parts can be ordered through your Service Person, Dealer, or a Master Parts Distributor. See this page for the Master Parts Distributors list. For best results, the **service person or dealer** should order parts through the distributor. Parts can be shipped directly to the **service person/dealer**.

**Warranty Parts**

Warranty parts will need a proof of purchase and can be ordered by your Service Person or Dealer. Proof of purchase is **required** for warranty parts.

All parts listed in the Parts List have a Part Number. When ordering parts, first obtain the Model Number and Serial Number from the name plate on your equipment. Then determine the Part Number (**not** the Index Number) and the Description of each part from the following illustration and part list. Be sure to give all this information . . .

Appliance Model Number _____ Part Description _____

Appliance Serial Number _____ Part Number _____

Type of Gas (Propane or Natural) _____

Do not order bolts, screws, washers or nuts. They are standard hardware items and can be purchased at any local hardware store.

Shipments contingent upon strikes, fires and all causes beyond our control.

# WARRANTY TERMS

Empire Comfort Systems Inc. warranties this hearth product to be free from defects at the time of purchase and for the periods specified below. Hearth products must be installed by a qualified technician and must be maintained and operated safely, in accordance with the instructions in the owner's manual. This warranty applies to the original purchaser only and is not transferable. All warranty repairs must be accomplished by a qualified gas appliance technician.

***Limited Lifetime Parts Warranty – Combustion Chamber, Heat Exchanger, and Factory-Installed Glass***

If the combustion chamber, heat exchanger (see parts list) or factory-installed glass fails because of defective workmanship or material, Empire will repair or replace at Empire's option.

***Limited Three-Year Parts Warranty – All Other Components***

(Except Remote Controls, Thermostats, Accessories and Replacement Parts)

Should any part fail because of defective workmanship or material within three years from the date of purchase, Empire will repair or replace at Empire's option..

***Limited One-Year Parts Warranty – Remote Controls, Thermostats, Accessories, and Parts***

Should any remote control, thermostat, accessory, or other part fail because of defective workmanship within one year from the date of purchase, Empire will repair or replace at Empire's option.

***Duties Of The Owner***

The appliance must be installed by a qualified installer and operated in accordance with the instructions furnished with the appliance.

A bill of sale, cancelled check, or payment record should be kept to verify purchase date and establish warranty period.

Ready access to the appliance for service.

***What Is Not Covered***

Damages that might result from the use, misuse, or improper installation of this appliance.

Travel, diagnostic costs and freight charges on warranted parts to and from the factory.

Claims that do not involve defective workmanship or materials.

Unauthorized service or parts replacements.

Removal and reinstallation cost.

Inoperable due to improper or lack of maintenance.

***How To Get Service***

To make a claim under this warranty, please have your receipt available and contact your installing dealer. Provide the dealer with the model number, serial number, type of gas, and purchase verification. The installing dealer is responsible for providing service and will contact the factory to initiate any warranted parts replacements. Empire will make replacement parts available at the factory. Shipping expenses are not covered.

If, after contacting your Empire dealer, service received has not been satisfactory, contact: Consumer Relations Department, Empire Comfort Systems Inc., PO Box 529, Belleville, Illinois 62222, or send an e-mail to info@empirecomfort.com with "Consumer Relations" in the subject line.

***Your Rights Under State Law***

This warranty gives your specific legal rights, and you may also have other rights, which vary from state to state.

**Empire Comfort Systems Inc.**
**Belleville, IL**

If you have a general question about our products, please e-mail us at info@empirecomfort.com.

If you have a service or repair question, please contact your dealer.

**www.empirecomfort.com**