This Owner's Manual is provided and hosted by Appliance Factory Parts.

Appliance Factory Parts
Experts in BBQ, Humidifier, & Appliance Parts
1-800-955-7075

# White Mountain Hearth OP36FB2MF-3 Owner's Manual

Shop genuine replacement parts for White Mountain Hearth OP36FB2MF-3

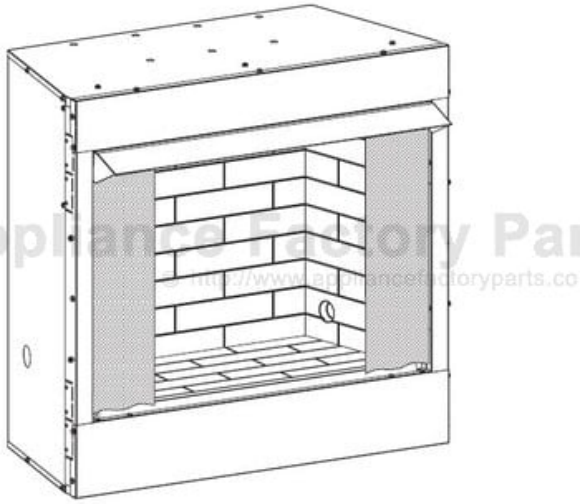

Find Your White Mountain Hearth Fireplace Parts - Select From 539 Models

-------- Manual continues below --------

# INSTALLATION INSTRUCTIONS AND OWNER'S MANUAL

**INSTALLER: Leave this manual with the appliance.**
**CONSUMER: Retain this manual for future reference.**

**⚠ WARNING**

**If the information in this manual is not followed exactly, a fire or explosion may result causing property damage, personal injury or loss of life.**

**FOR USE ONLY WITH A LISTED GAS-FIRED UNVENTED DECORATIVE ROOM HEATER NOT TO EXCEED 50,000 BTU/H.**

**DO NOT BUILD A WOOD FIRE.**

**Carefully review the instructions supplied with the decorative type unvented room heater for the minimum firebox size requirement.**

**DO NOT INSTALL AN APPLIANCE IN THIS FIREBOX UNLESS THIS FIREBOX MEETS THE MINIMUM DIMENSIONS REQUIRED FOR THE INSTALLATION.**

**⚠ DANGER**

**If you smell gas:**
1. **Shut off gas to the appliance.**
2. **Extinguish any open flame.**
3. **If odor continues, keep away from the appliance and immediately call your gas supplier or fire department.**

**⚠ WARNING**

**Improper installation, adjustment, alteration, service or maintenance can cause injury or property damage. Read the installation, operating and maintenance instructions thoroughly before installing or servicing this equipment.**

## OUTDOOR VENTLESS FIREBOX

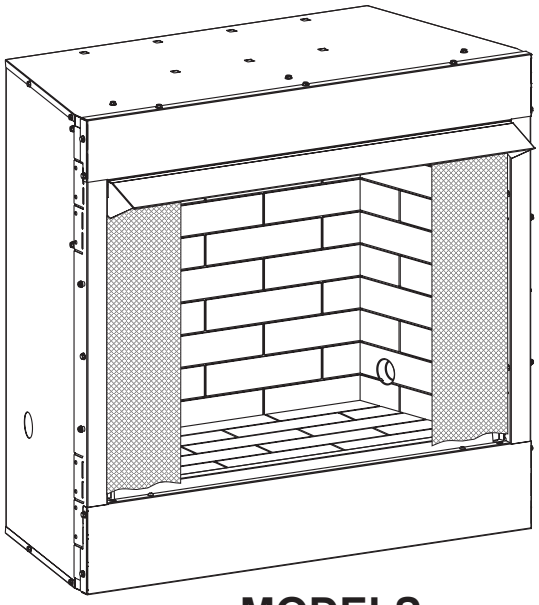

GAS-FIRED
C UL US
LISTED
MH45080

## MODELS:

**OP32FB2MF-3***
**OP36FB2MF-3**
**OP42FB2MF-3**

*** Please note, Empire Comfort Systems does not offer an outdoor gas burner to fit the OP32FB2MF firebox. You will need to find a suitable burner from another manufacturer.**

This product complies with ANSI Z.21.91 for outdoor use with Z21.97 burners, 50,000 BTU Max.

NATIONAL FIREPLACE INSTITUTE
NFI
CERTIFIED
www.nficertified.org

We suggest that our gas hearth products be installed and serviced by professionals who are certified in the U.S. by the National Fireplace Institute® (NFI) as NFI Gas Specialists.

# TABLE OF CONTENTS


| SECTION | PAGE |
|---|---|
| BEFORE YOU START | 3 |
| CARTON CONTENTS & HARDWARE PACKAGE | 3 |
| IMPORTANT SAFETY INFORMATION | 4 |
| HOMEOWNER REFERENCE INFORMATION | 5 |
| INTRODUCTION | 5 - 6 |
| ACCESSORIES | 6 |
| FIREBOX DIMENSIONS | 7 |
| CLEARANCES | 8-9 |
| PLANNING INSTALLATION | 10-11 |
| FIREBOX INSTALLATION INSTRUCTIONS | 11-12 |
| INSTALLING HOOD | 12 |
| GAS LINE CONNECTION | 13 |
| MAINTENANCE | 13 |
| PARTS VIEW | 14 |
| PARTS LIST | 14 |
| MASTER PARTS DISTRIBUTOR LIST | 15 |
| HOW TO ORDER REPAIR PARTS | 15 |
| WARRANTY TERMS | 16 |

# BEFORE YOU START

**Sample Warnings and Definitions:**

| ⚠ DANGER |
|---|
| Indicates a hazardous situation which, if not avoided, will result in death or serious injury. |

| ⚠ WARNING |
|---|
| Indicates a hazardous situation which, if not avoided, could result in death or serious injury. |

| ⚠ CAUTION |
|---|
| Indicates a hazardous situation which, if not avoided, could result in minor or moderate injury. |

***NOTICE:*** Indicates information considered important but not hazard related.

1. Read the Safety Information on page 4.
2. Determine where to install the firebox. See pages 10-11.
3. Frame the opening. See page 11.
4. Install optional drain tray. (See instructions with drain tray)
5. Install the firebox. See pages 12.
6. Install the gas lines. See page 13.
7. Install hood, optional bifold door or optional extension hood.
8. Install and light the burner (sold seperately).
9. Show homeowner how to do basic maintenance.

# HARDWARE PACKAGE & CARTON CONTENTS

**Hardware Package**

SCREW, 10-32 X ½ TYPE F
PHILLIPS PAN HEAD (QTY 4)

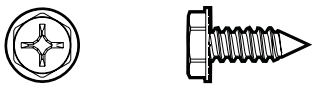

SCREW, 10-24 X ½ TYPE
PHILLIPS HEX HEAD (QTY 2)

**Hood**

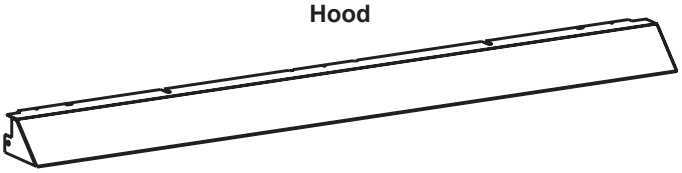

**Note:** See parts view and parts list on page 14 for ordering replacement parts.
**Note:** Do not order bolts, screws, washers or nuts. They are standard hardware items and can be purchased at hardware stores.

# IMPORTANT SAFETY INFORMATION

## FOR THE INSTALLER

- Leave instruction manual with the homeowner
- This firebox complies with ANSI Z21.91 for outdoor use with Z21.97 burners, 50,000 BTU MAX.
- Installation and repair should be done by a qualified service person. This firebox should be inspected before use and at least annually by a qualified service person.
- During manufacture, this firebox is treated with oils, films and bonding agents. These are not harmful but may produce smoke and odor as they burn off during initial operation. This is normal.
- Any modification to this firebox or to controls can be dangerous. Improper installation or use of the firebox can cause serious injury or death from fire, burns, explosion or carbon monoxide poisoning.
- The firebox hood must not be modified.
- Use Non-Combustible Materials where indicated for the firebox installation. Non-combustible materials do not ignite. These include metal, brick, ceramic, concrete, slate, glass, and plaster. Adhesives must be rated for high temperatures (300°F +). Any mechanical fasteners used to install material must also be non-combustible, including wall anchors and tile spacers. Materials that pass the ASTM E 136 test (Standard Test Method for Behavior of Materials in a Vertical Tube Furnace at 750C) are considered non-combustible.
- When the firebox is installed directly on carpeting, tile or other combustible material, other than wood flooring, the firebox must be installed on a metal or wood panel extending the full width and depth of the enclosure.

## FOR THE HOMEOWNER

- Alert children and adults to the hazards of high surface temperatures. Keep children and other at-risk individuals away to avoid burns or clothing ignition.
- Carefully supervise young children when they are in the same area as the firebox.
- Do not hang or place clothing or other flammable materials on or near the firebox.
- Do not allow Combustible Materials adjacent to or in contact with face of the firebox. Combustible materials include wood, or other materials that will burn even when treated with fire-retardant chemicals.
- Keep firebox area clear and free from combustible materials, gasoline and other flammable vapors and liquids.
- Do not allow fans to blow directly into or at the firebox.
- Avoid any drafts that alter burner flame patterns.
- Do not operate this firebox with glass doors or weather door in the closed position. A firebox screen must be in place when the burner is being used.
- Do not use this firebox if any part has been underwater. Immediately call a qualified service technician to inspect the firebox and to replace any part of the control system and any gas control which has been under water.

# HOMEOWNER REFERENCE INFORMATION

We recommend that you record the following information about your firebox.

Model Number: _____ Date purchased: _____

Serial Number: _____ Location of firebox: _____

Dealer Name: _____ Dealer Phone: _____

Notes: _____

# INTRODUCTION

**Instructions to Installer**

1. Leave instruction manual with owner after installation.
2. Show home owner Product Registration Card supplied with firebox.
3. Fill in the Homeowner Reference Information above.
4. Show owner how to start and operate outdoor burner (not provided).

Always consult your local Building Department regarding regulations, codes or ordinances which apply to the installation of an outdoor firebox.

This application is only for use with the type of gas indicated on the burner rating plate. Burner sold separately.

**⚠ WARNING**

Any change to this FIREBOX can be dangerous.
Improper installation or use of the firebox can cause serious injury or death from fire, burns, explosion or carbon monoxide poisoning.

This firebox is design certified in accordance with American National Standard Z21.91 for outdoor use with Z21.97 burners.

**Note: This firebox has been tested and approved up to 50,000 BTU's. DO NOT USE WITH BURNERS OVER 50,000 BTU's.**

**Important**

All correspondence should refer to complete Model Number, and Serial Number. Refer to the Homeowner Reference Information above.

**Moisture Resistance**

This outdoor firebox will shed moderate amounts of water, but is not waterproof. Water and condensing water vapor may enter the chase under certain conditions.
The firebox will not perform as an exterior wall. Moisture penetration must be considered for construction that places the firebox in structure walls or on moisture sensitive surfaces.
When installed next to exterior walls: Empire Comfort Systems recommends the firebox chase be constructed outside the structure's weather envelope. Where the platform meets the wall, use a flashing detail similar to that required for attached decks.
Chase platforms, including hearths should slope away from the structure at 1/4 inch per foot. The firebox can be shimmed level.
When installed on surfaces where water may collect or cause damage: Empire Comfort Systems recommends a slope of 1/8 inch to 1/4 inch per foot towards the drain port suggested. The firebox can be shimmed level.
Hearths should slope away from the front of the firebox and chase at 1/8 inch to 1/4 inch per foot. Metal safety strips must be on top of any combustible hearth materials used for moisture management.
When purchasing a firebox we recommend you also buy a weather cover or glass door accessory to protect the firebox from moisture. Never install the firebox where moisture cannot drain easily.

**Screened Porch Installation**

The firebox may be installed safely and is design certified by UL to be installed in a screen porch with the following guidelines.

| | |
|---|---|
| Minimum Porch Area | 96 sq ft |
| Minimum Ceiling Height | 84 inch |

See Pages 10 - 11, Planning Installation.

# INTRODUCTION

**Qualified Installing Agency**
Installation and replacement of gas piping, gas utilization equipment or accessories and repair and servicing of equipment shall be performed only by a qualified agency. The term "qualified agency" means any individual, firm, corporation or company which either in person or through a representative is engaged in and is responsible for (a) the installation or replacement of gas piping or (b) the connection, installation, repair or servicing of equipment, who is experienced in such work, familiar with all precautions required and has complied with all the requirements of the authority having jurisdiction.

When the firebox is connected to a fixed piping system, the installation must conform with local codes, or in the absence of local codes with the *National Fuel Gas Code, ANSI Z223.1*/ NFPA 54*, or *International Fuel Gas Code*.
**Available from the American National Standards Institute, Inc. 1430 Broadway, New York, N.Y. 10018.*

**During manufacture and fabricating, components of this appliance are treated with oils, films, and/or bonding agents. These are not harmful, but may produce smoke and smells as they are burned off during initial operation of the appliance. This is normal.**

Solid fuels shall not be burned in this firebox.

**Cleaning Instructions at Installation**
This firebox is built using mostly high-grade stainless steel to resist rust-through. In outdoor applications, all stainless steel will develop a dull patina and, depending on the local environment and on the materials used in the installation, may develop some surface oxidation (rust). This does not affect the performance of the firebox, and does not require any action to correct. If you prefer keeping your firebox front looking factory-fresh, clean it as required with stainless steel cleaner.
When installation application includes highly acidic applications such as acid wash or stone etching, do not remove the protective PVC film from the stainless steel until after this application is complete. Once the film has been removed we recommend that the appliance be cleaned with a stainless steel cleaner immediately.
Please note that areas where the film has been formed (corners, hems, etc.) may require extra cleaning due to the properties of the film. Ensure that all protective film has been removed from the firebox prior to burning the firebox.

**Commonwealth of Massachusetts:** The installation must be made by a licensed plumber or gas fitter in the Commonwealth of Massachusetts.

Sellers of unvented propane or natural gas-fired supplemental room burners shall provide to each purchaser a copy of 527 CMR-30 upon sale of the unit.

In the Commonwealth of Massachusetts, unvented propane and natural gas-fired space burners shall be prohibited in bedrooms and bathrooms.

# ACCESSORIES

The following accessory parts can be obtained from your Empire Comfort Systems dealer. Contact your Empire Dealer for more accessory options. If you need additional information beyond what your dealer can furnish, contact Empire Comfort Systems Inc., 918 Freeburg Ave., Belleville, Illinois 62220-2623.

| Model Number | Description |
|---|---|
| BD32SS | 32-Inch Bifold Glass Door |
| BD36SS | 36-Inch Bifold Glass Door |
| BD42SS | 42-Inch Bifold Glass Door |
| DT32SS | 32-Inch Drain Tray - Stainless Steel |
| DT36SS | 36-Inch Drain Tray - Stainless Steel |
| DT42SS | 42-Inch Drain Tray - Stainless Steel |
| WD32SS | 32-Inch Weather Door - Stainless Steel |
| WD36SS | 36-Inch Weather Door - Stainless Steel |
| WD42SS | 42-Inch Weather Door - Stainless Steel |
| VB4H32SS | 32-Inch Extended Hood - Stainless Steel |
| VB4H36SS | 36-Inch Extended Hood - Stainless Steel |
| VB4H42SS | 42-Inch Extended Hood - Stainless Steel |

# FIREBOX DIMENSIONS

**OUTER FIREBOX DIMENSIONS**

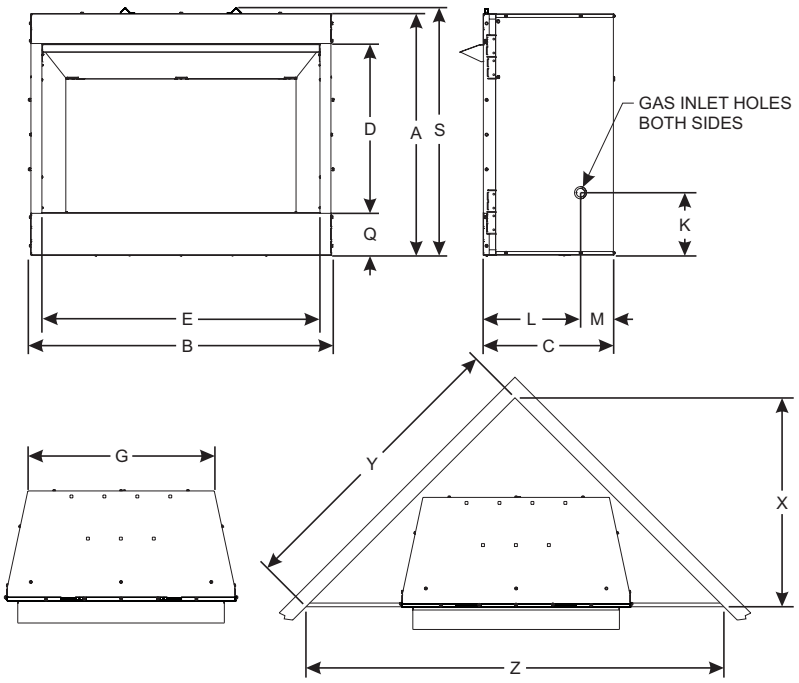


**INNER FIREBOX DIMENSIONS**

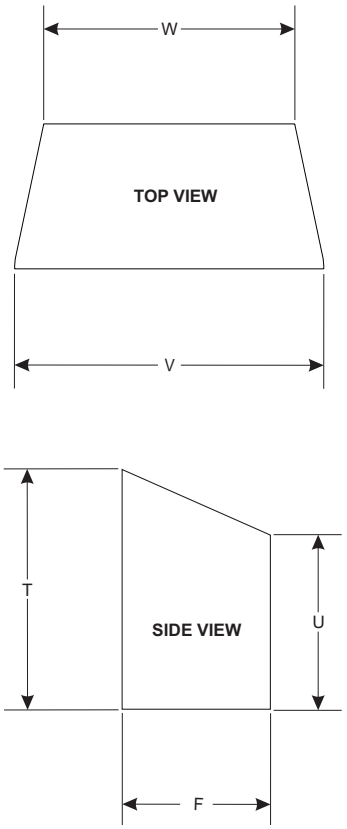


| INDEX LETTER | DIMENSION DESCRIPTION | DIMENSIONS (in inches) | | |
|---|---|---|---|---|
| | | OP32 | OP36 | OP42 |
| A | The maximum height of firebox face (excluding standoffs) | 33-1/16 | 35-1/16 | 35-1/16 |
| B | The maximum width of the firebox face (excluding nailing flanges) | 35 | 40 | 44 |
| C | The maximum depth of the firebox | 16-9/16 | 19 | 19 |
| D | The height of the firebox opening | 22-1/4 | 24-1/4 | 24-1/4 |
| E | The width of the firebox opening | 31 | 36 | 40 |
| F | The interior depth of the firebox | 13-3/16 | 15-9/16 | 15-9/16 |
| G | The rear exterior width of the firebox | 27-7/8 | 31-7/8 | 35-7/8 |
| K | Height from the bottom of the box to the gas line opening | 8-11/16 | 8-11/16 | -11/16 |
| L | Depth from the front of the box to gas line opening | 11-5/8 | 14 | 14 |
| M | Depth from rear of box to gas line opening | 4-3/4 | 4-3/4 | 4-3/4 |
| Q | Distance from floor to firebox opening | 6-3/16 | 6-3/16 | 6-3/16 |
| S | Overall height to header | 33-13/16 | 35-13/16 | 35-13/16 |
| T | Interior front height of firebox | 21-3/8 | 24-3/16 | 24-3/16 |
| U | Interior rear height of firebox | 17-7/8 | 19-1/4 | 19-1/4 |
| V | Interior front width of firebox | 29-7/16 | 34-5/16 | 38-5/16 |
| W | Interior rear width of firebox | 24 | 28 | 32 |
| X | Corner installed depth | 30-3/16 | 34-11/16 | 36-3/4 |
| Y | Corner installed wall length | 42-11/16 | 49-1/16 | 51-15/16 |
| Z | Corner installed width | 60-3/8 | 69-5/16 | 73-5/16 |

# CLEARANCES

**Top Framing and Finishing:** Combustible framing materials requires 3/4 inch to top of firebox. **See Figure 1**.

**Sidewall Clearances:** The clearance from the inside of the firebox to perpendicular combustible side wall should not be less than 6 inches. **See Figure 2.**

**Firebox Face Clearance:** 3/8 inch from face and back 1 3/4 inches.

**Firebox Side and Back Clearances:** The firebox outer casing side and back flanges are zero clearance to combustibles.

**Firebox Front Clearance:** Leave at least 36 inches clearance from the front of the firebox into the room.

**Ceiling Clearances:** The ceiling height should not be less than 84 inches from the floor. **See Figure 3.**

**Mantel Clearances:** Firebox models must use the hood supplied with the firebox, or the optional extension hood available for each model. If a combustible mantel is installed, it must meet the clearance requirements detailed in **Figure 3.**

**Grate Clearance:** The minimum clearance between the front legs of the grate and front edge of the firebox is 2 inches.

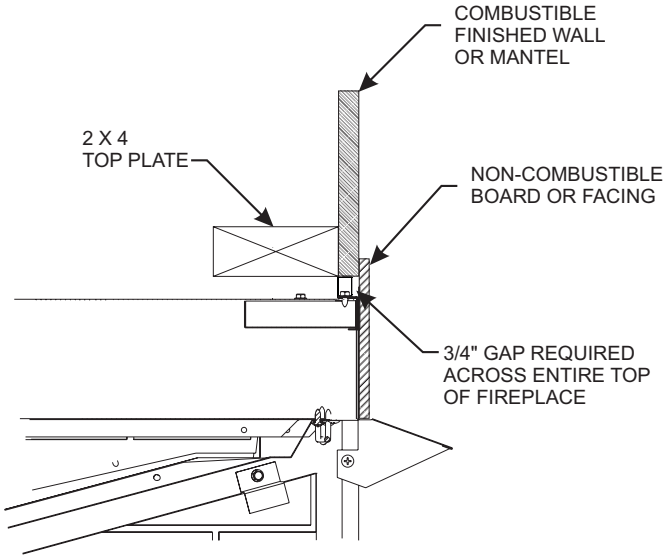


**Figure 1 - Clearances to Combustibles**

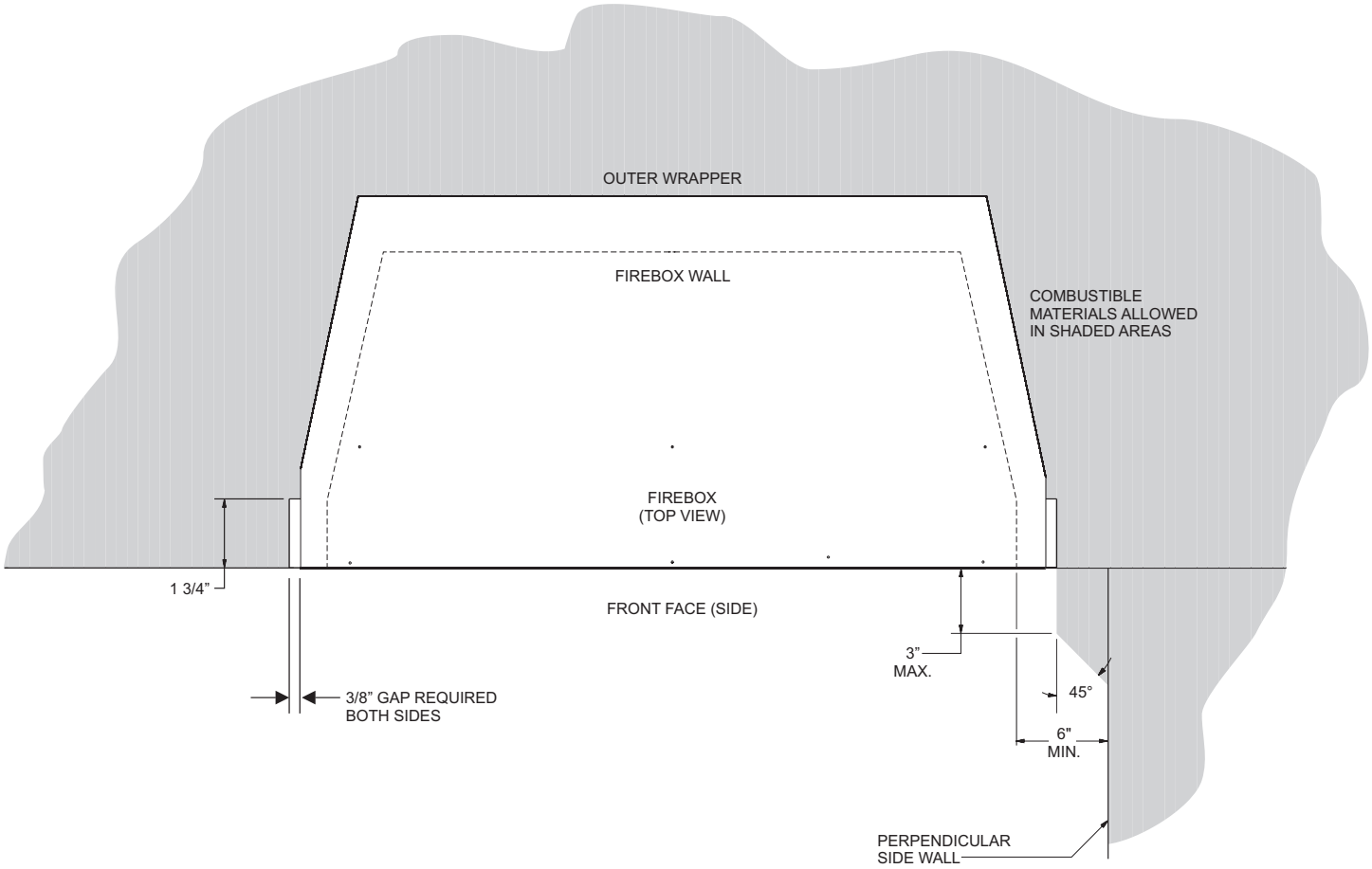


**Figure 2**

# CLEARANCES

**Mantel Chart**

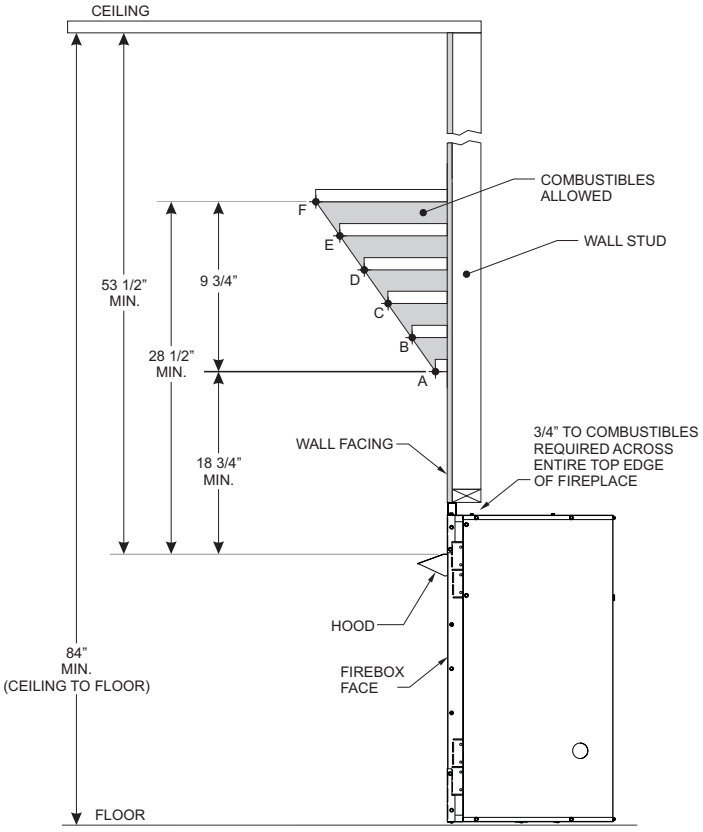


| INDEX LETTER | Dimensions in inches | |
|---|---|---|
| | DISTANCE FROM WALL SURFACE | DISTANCE ABOVE Firebox HOOD |
| A | 2 | 18 ¾ |
| B | 4 | 21 ½ |
| C | 6 | 24 ¼ |
| D | 8 | 27 |
| E | 10 | 27 ¾ |
| F | 12 | 28 ½ |

**Figure 3**

**Television Considerations**

Installing a television above an firebox has become increasingly popular; however, the area above any firebox gets hot and most TV manufacturers recommend against placing their products near a heat source.

If you install a television above this firebox, Empire Comfort Systems accepts no responsibility for damage or injuries. Follow the television manufacturer's installation instructions, including any recommendations regarding proximity to heat sources.

If you have a TV above your firebox, turn off the firebox and let it cool completely before servicing or touching any buttons on the TV.

# PLANNING INSTALLATION

In planning the installation for the firebox, it is necessary to determine where the unit is to be installed. Gas supply piping should also be planned at this time.

The firebox can be mounted on any of these surfaces:
1. A flat combustible or non-combustible surface.
2. A raised platform combustible material.
3. Four corners of the firebox so contact is made on all four perimeter edges on its bottom.
   (Example: Four concrete blocks - if allowed by local code.)

If the firebox is installed directly on carpeting, tile or other material other than wood flooring, it should be installed on a metal or wood panel extending the full width and depth of the firebox.

Decide what components to include in your installation.

This firebox is intended for installation on an outdoor patio or in your yard. This firebox shall be used only outdoors in a well ventilated space and shall NOT be used in a building, garage, or other enclosed area.

Install the firebox in an area sheltered from direct wind, which may cause erratic flames and main burner outage. Erratic flames could also cause soot on logs, walls or ceiling. Flame outages and sooting are nuisances but pose no safety issues.

Typical installation may include covered patio, gazebo or an outside wall of a house.

- Minimum porch area – 96 sq ft
- Minimum ceiling height – 84 inches

Installation in partial enclosures must conform with one of the following conditions:
- With walls on all sides, but with no overhead cover. **See Figure 4.**

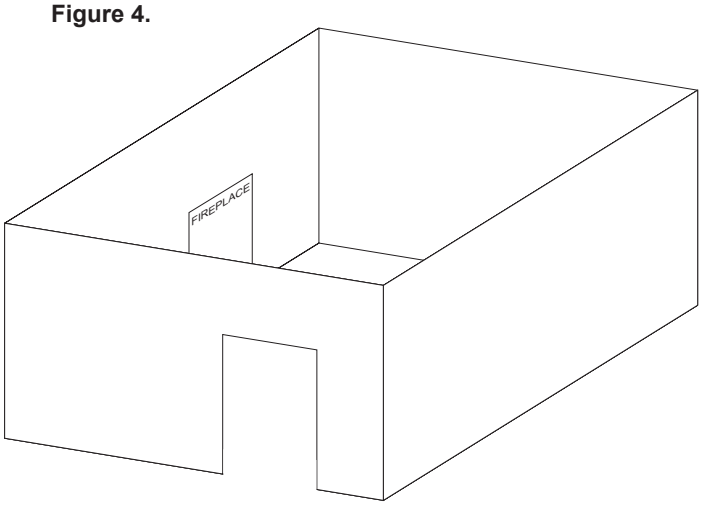


**Figure 4**

- Within a partial enclosure which includes an overhead cover and no more than two side walls. These side walls may be parallel, as in a breezeway or at right angles to each side. **See Figure 5.**

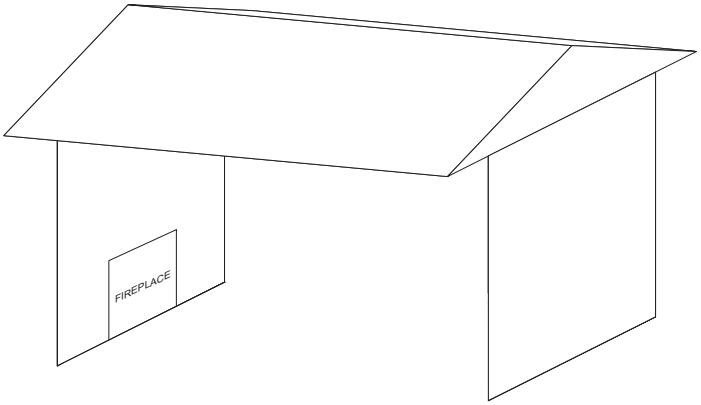


**Figure 5**

- This partial enclosure includes an overhead cover and three walls, no more than 30% or more of the horizontal periphery (i.e. perimeter) of the enclosure permanently open. These openings cannot be screened or have operable windows or shutters. **See Figure 6.**

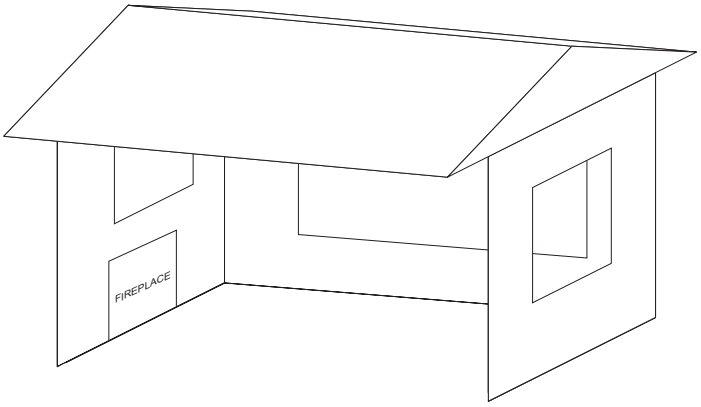


**Figure 6**

**Outdoor Firebox Enclosure Requirements**
Do not install firebox until all necessary provisions are made for combustion and ventilation air. Consult the written instructions provided with the firebox for information concerning combustion and ventilation air. In the absence of instructions, refer to the National Fuel Gas Code, ANSI Z223.1/NFPA 54, Air for Combustion and Ventilation, or applicable local codes.

**ATTENTION: Vinyl Soffit, Vinyl Ceiling, Vinyl Overhang Disclaimer**
Clearances are to heat resistant material (i.e. wood, metal). This does not include vinyl. Empire Comfort Systems Inc. will not be held responsible for heat damage caused to vinyl overhangs, vinyl ceilings or vinyl ventilated/unventilated soffits.

# PLANNING INSTALLATION

**Television Considerations**

Installing a television above a firebox has become increasingly popular; however, the area above any firebox gets hot and most TV manufacturers recommend against placing their products near a heat source.

If you install a television above this firebox, Empire Comfort Systems accepts no responsibility for damage or injuries. Follow the television manufacturer's installation instructions, including any recommendations regarding proximity to heat sources.

If you have a TV above your firebox, turn off the firebox and let it cool completely before servicing or touching any buttons on the TV.

The maximum BTU input for this firebox is 50,000. Verify that any burner and/or accessory are rated for use up to 50,000 Btu before installing it into this firebox. Follow any special installation instructions that came with the burner or accessory (i.e. clearances, combustion and ventilation air, and enclosure information).

**⚠ WARNING**

Improper installation, adjustment, alteration, service or maintenance can cause property damage, personal injury or loss of life. Installation and service must be performed by a qualified installer, service agency or the gas supplier.

# FIREBOX INSTALLATION INSTRUCTIONS

Install only an ANSI Z21.97 burner into this firebox.

Any burner must be "For use with approved ANSI Z21.11.2 unvented room heater."

In planning the installation for the firebox, it is necessary to determine where the firebox is to be installed and whether optional accessories are desired. Gas supply piping should also be planned at this time.

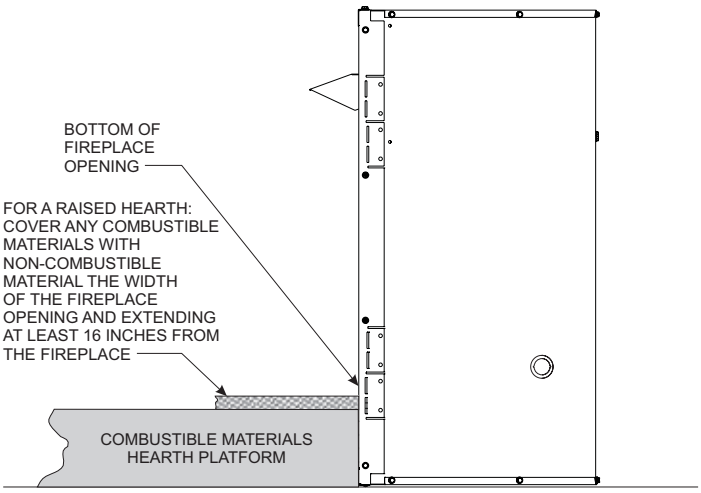


**Figure 7**

*NOTICE:* Hearth is not required if firebox is installed on finished floor.

**Firebox Framing**

Firebox framing can be built before or after the firebox is set in place. Framing should be positioned to accommodate wall covering and firebox facing material. The firebox framing should be constructed of 2 x 4 lumber or heavier. The framing top plate or header may be as close as 3/4 inch above the top of the firebox. Refer to **Figure 8** for firebox framing dimensions.

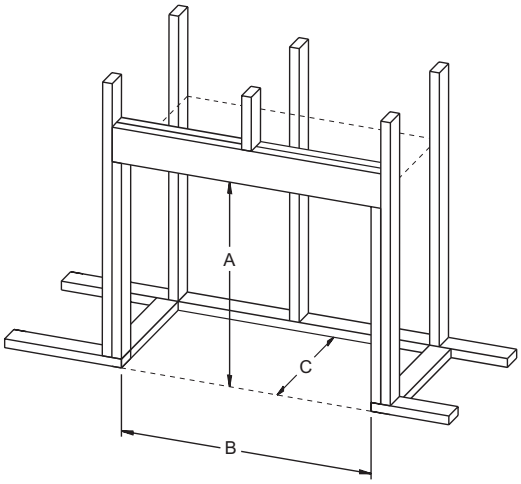


**Deluxe Vent-Free Firebox Framing Dimensions (inches)**

| | A | B | C |
|---|---|---|---|
| Model | Framing Height | Framing Width | Framing Depth |
| OP32FB2MF | 34 | 36 | 16-3/4 |
| OP36FB2MF | 36 | 41 | 19-1/4 |
| OP42FB2MF | 36 | 45 | 19-1/4 |

**Figure 8**

**Premium Fireplace Framing Dimensions - If Installing Optional Drain Tray (inches)**

| Model | A | B | C |
|---|---|---|---|
| OP32FB2MF | 35 | 36 | 16-3/4 |
| OP36FB2MF | 37 | 41 | 19-1/4 |
| OP42FB2MF | 37 | 45 | 19-1/4 |

# FIREBOX INSTALLATION INSTRUCTIONS

**Locating Firebox**

Pry the top standoffs up and bend pieces as shown. Attach free-end to face top with two hex-head screws from hardware pack. Place firebox in framing opening. Use the tabs on the side of the firebox to attach firebox to framing. Different tab locations can be used for finishing materials with thicknesses of 1/2 inch and 5/8 inch. **See Figure 9.**

Framing tabs should fit directly against framing material. Use at least one nail per bracket to secure in place.

Check squareness of the firebox prior to securing to framed opening. **See Figure 10.**

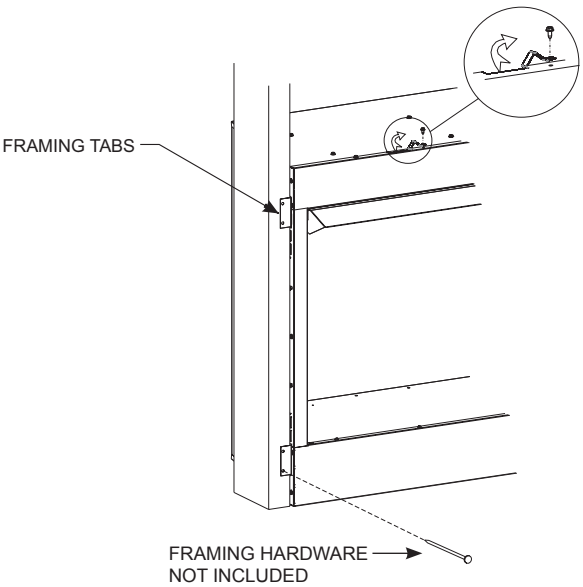


**Figure 9**

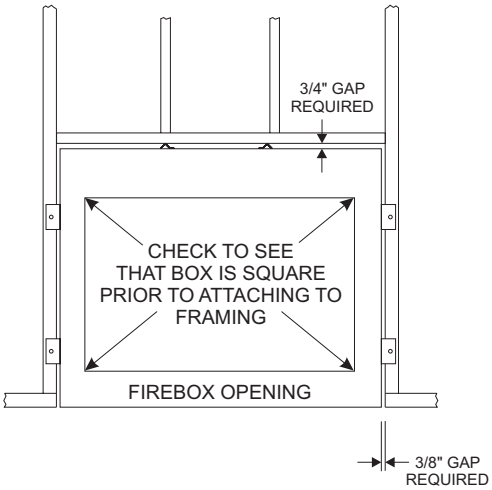


**Figure 10**

**Extended Hoods**

If the non-combustible facing material used to finish the firebox is over 1 inch thick, an extended hood that extends 2 inches farther into the room is recommended. Contract your Empire Dealer for details.

| | |
|---|---|
| VB4H32SS | Stainless Steel Extended Hood |
| VB4H36SS | Stainless Steel Extended Hood |
| VB4H42SS | Stainless Steel Extended Hood |

**Installing the Hood**

A hood that is furnished with each firebox (or optional extension hood) MUST be installed before the firebox is used. Failure to do so may create a possible fire hazard.

1. Loosen the two screws (A) holding firebox top to face panel, then slide the hood flange between the firebox top and face panel and re-tighten the screws. **See Figure 11.**
2. Install one screw at each end of the hood as shown (C). **See Figure 11.**

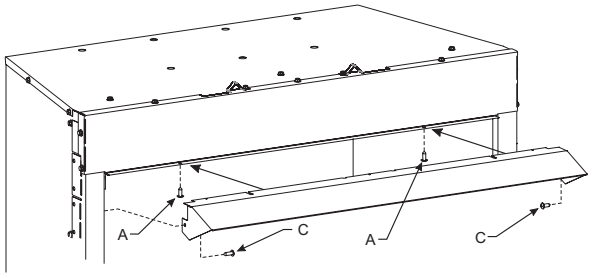


**Figure 11**

**Finishing**

All joints (top, bottom and sides), where the wall or decorative facing material meets the firebox surround must be sealed with a non-combustible material (300°F + Sealant).

*NOTICE:* When installation application includes highly acidic applications such as mortar or stone etching, do not remove the protective PVC film from the stainless steel until after this application is complete. Once the film has been removed we recommend that the firebox be cleaned with a stainless steel cleaner immediately.

**Cleaning Instructions at Installation**

This firebox is built using mostly high-grade stainless steel to resist rust-through. In outdoor applications, all stainless steel will develop a dull patina and, depending on the local environment and on the materials used in the installation, may develop some surface oxidation (rust). This does not affect the performance of the firebox, and does not require any action to correct. If you prefer keeping your firebox front looking factory-fresh, clean it as required with stainless steel cleaner.

# GAS LINE CONNECTION

The firebox is designed to accept a gas line for an ANSI approved burner. Have the gas line installed by a qualified service person in accordance with all building codes. Consult local building codes to properly size the gas supply line leading to the hook-up at the installed burner. The Commonwealth of Massachusetts requires that a flexible gas connector cannot exceed three feet in length.

Gas access holes are provided on both sides of the firebox. **See Figure 12**. Carefully remove the knockout in the refractory brick panel using a large standard screwdriver and hammer. First, place screwdriver in groove next to plug and pry sideways to pop out main plug. Then remove the remaining concrete in hole with gentle tapping with ball peen hammer and/or screwdriver. A masonry drill and bit may also be used to create a clean hole for the gas line to pass through. **See Figure 13.**

After the brick panel knockout is removed, the firebox wrap will have a round metal knockout that must be removed also. Use a screwdriver to punch out the metal knockout.

WARNING: CONNECTION DIRECTLY TO AN UNREGULATED L.P. SUPPLY CAN CAUSE AN EXPLOSION.

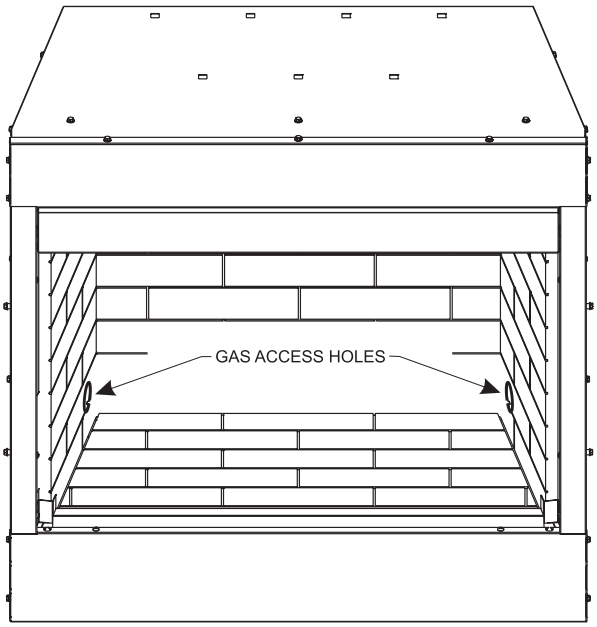


**Figure 12**

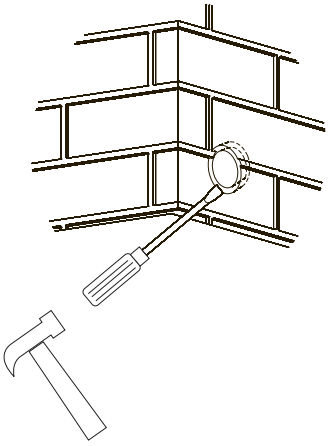


**Figure 13**

**Note:** Use caution when removing the brick panel knockouts to avoid damaging the brick panel.

# MAINTENANCE

Vacuum or brush the control compartment at least twice a year. Follow the maintenance instructions provided with the burner.

# PARTS VIEW

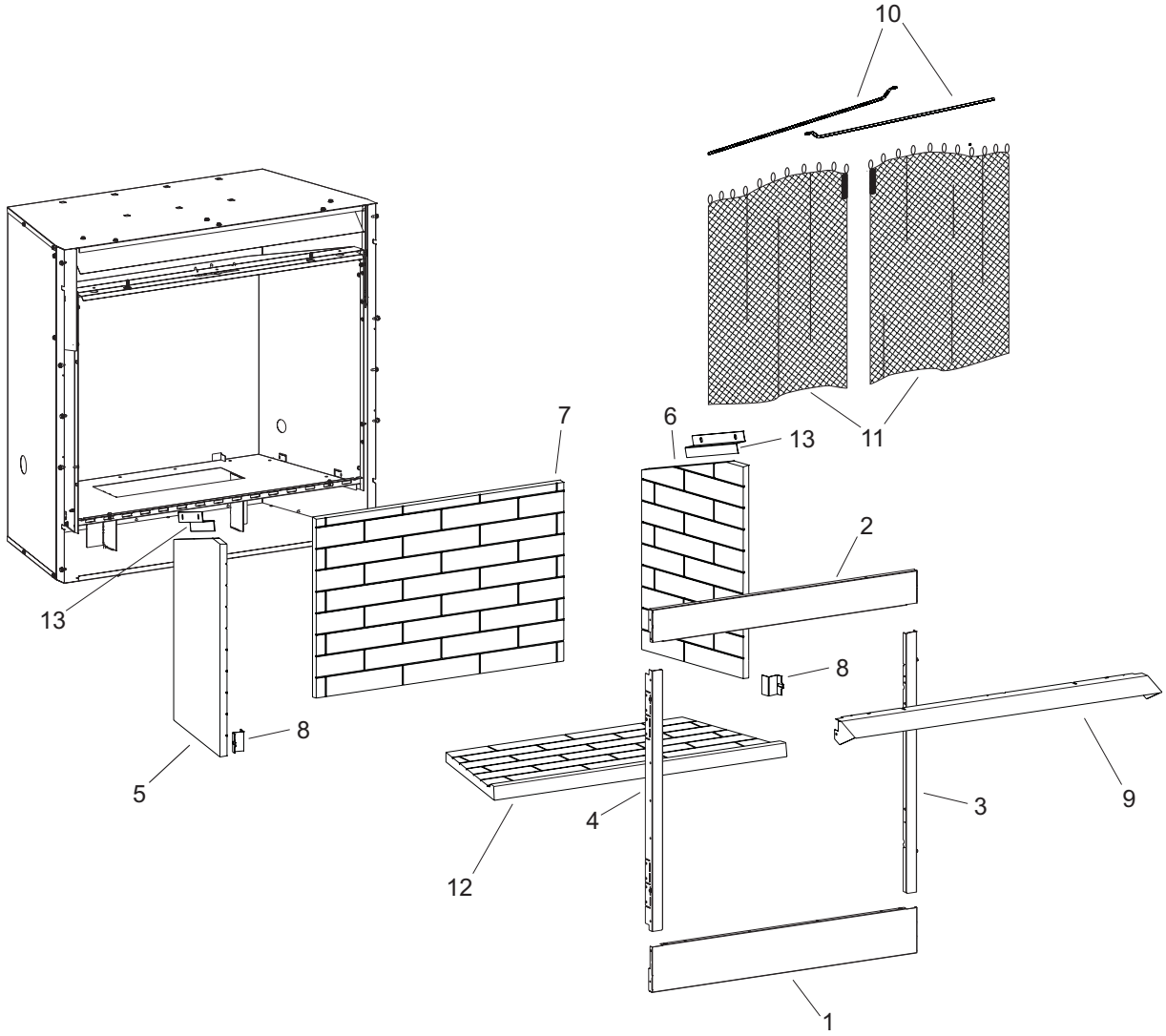


# PARTS LIST

**USE ONLY MANUFACTURER'S REPLACEMENT PARTS. USE OF ANY OTHER PARTS COULD CAUSE INJURY OR DEATH.**

| Index No. | Part No. OP32FB2MF | OP36FB2MF | OP42FB2MF | Description |
|---|---|---|---|---|
| 1 | 33847 | 33848 | 33849 | Face, Bottom |
| 2 | 33850 | 33851 | 33852 | Face, Top |
| 3 | 33853 | 33854 | 33854 | Face, Side - Right |
| 4 | 33855 | 33856 | 33856 | Face, Side - Left |
| 5 | R10387 | R10391 | R10391 | Liner, Side - Left |
| 6 | R10388 | R10392 | R10392 | Liner, Side - Right |
| 7 | R10386 | R10390 | R10394 | Liner, Rear |
| 8 | 33885 | 33885 | 33885 | Liner Bracket (2 required) |
| 9 | 21117 | 21162 | 33609 | Hood |
| 10 | R11107 | R11036 | R11037 | Curtain, Rod (2 required) |
| 11 | R11108 | R10765 | R10765 | Curtain, Screen (2 required) |
| 12 | R11104 | R11105 | R11106 | Liner, Bottom |
| 13 | 27338 | 27338 | 37338 | Top Liner Bracket (2 required) |

# MASTER PARTS DISTRIBUTOR LIST

To Order Parts Under Warranty, please contact your local Empire dealer. See the dealer locator at www.empirecomfort.com. To provide warranty service, your dealer will need your name and address, purchase date and serial number, and the nature of the problem with the firebox.

To Order Parts After the Warranty Period, please contact your dealer or one of the Master Parts Distributors listed below. This list changes from time to time. For the current list, please click on the Master Parts button at www.empirecomfort.com.

Please note: Master Parts Distributors are independent businesses that stock the most commonly ordered Original Equipment repair parts for Heaters, Grills, and Fireboxs manufactured by Empire Comfort Systems Inc.

**Dey Distributing**
1401 Willow Lake Boulevard
Vadnais Heights, MN 55101

**Phone:** 651-490-9191
**Toll Free:** 800-397-1339
**Website:** www.deydistributing.com
**Parts: Heater, Hearth and Grills**

**F. W. Webb Company**
200 Locust Street
Hartford, CT 06114

**Phone:** 860-722-2433
**Toll Free:** 800-243-9360
**Fax:** 860-293-0479
**Toll Free Fax:** 800-274-2004
**Websites:** www.fwwebb.com & www.victormfg.com
**Parts: Heater, Hearth and Grills**

**East Coast Energy Products**
10 East Route 36
West Long Branch, NJ 07764

**Phone:** 732-870-8809
**Toll Free:** 800-755-8809
**Fax:** 732-870-8811
**Website:** www.eastcoastenergy.com
**Parts: Heater, Hearth and Grills**

# HOW TO ORDER REPAIR PARTS

**Parts Not Under Warranty**

Parts can be ordered through your Service Person, Dealer, or a Master Parts Distributor. See this page for the Master Parts Distributors list. For best results, the **service person or dealer** should order parts through the distributor. Parts can be shipped directly to the **service person/dealer**.

**Warranty Parts**

Warranty parts will need a proof of purchase and can be ordered by your Service Person or Dealer. Proof of purchase is **required** for warranty parts.

All parts listed in the Parts List have a Part Number. When ordering parts, first obtain the Model Number and Serial Number from the name plate on your equipment. Then determine the Part Number (**not** the Index Number) and the Description of each part from the following illustration and part list. Be sure to give all this information . . .

Appliance Model Number _____ Part Description _____

Appliance Serial Number _____ Part Number _____

Type of Gas (Propane or Natural) _____

Do not order bolts, screws, washers or nuts. They are standard hardware items and can be purchased at any local hardware store.

Shipments contingent upon strikes, fires and all causes beyond our control.

# WARRANTY TERMS

Empire Comfort Systems Inc. warranties this hearth product to be free from defects at the time of purchase and for the periods specified below. Hearth products must be installed by a qualified technician and must be maintained and operated safely, in accordance with the instructions in the owner's manual. This warranty applies to the original purchaser only and is not transferable. All warranty repairs must be accomplished by a qualified gas appliance technician.

***Limited Five-Year Parts Warranty – All Components (Except Remote Controls, Accessories and Replacement Parts)***

- Should any part fail because of defective workmanship or material within five years from the date of purchase, Empire will repair or replace at Empire's option.

***Limited One-Year Parts Warranty – Remote Controls, Accessories, and Parts***

- Should any remote control, accessory, or other part fail because of defective workmanship within one year from the date of purchase, Empire will repair or replace at Empire's option.

***Duties of the Owner***

- The appliance must be installed by a qualified installer and operated in accordance with the instructions furnished with the appliance.
- A bill of sale, cancelled check, or payment record should be kept to verify purchase date and establish warranty period.
- Ready access to the appliance for service.

***What Is Not Covered***

- Damages that might result from the use, misuse, or improper installation of this appliance.
- Travel, diagnostic costs and freight charges on warranted parts to and from the factory.
- Claims that do not involve defective workmanship or materials.
- Unauthorized service or parts replacements.
- Removal and reinstallation cost.
- Inoperable due to improper or lack of maintenance.

***How To Get Service***

- To make a claim under this warranty, please have your receipt available and contact your installing dealer. Provide the dealer with the model number, serial number, type of gas, and purchase verification. The installing dealer is responsible for providing service and will contact the factory to initiate any warranted parts replacements. Empire will make replacement parts available at the factory. Shipping expenses are not covered.
- If, after contacting your Empire dealer, service received has not been satisfactory, contact: Consumer Relations Department, Empire Comfort Systems Inc., PO Box 529, Belleville, Illinois 62222, or send an e-mail to info@empirecomfort.com with "Consumer Relations" in the subject line.

***Your Rights Under State Law***

- This warranty gives you specific legal rights, and you may also have other rights, which vary from state to state.

EMPIRE
COMFORT SYSTEMS
SINCE 1932

**Empire Comfort Systems Inc.**
**Belleville, IL**

If you have a general question about our products, please e-mail us at info@empirecomfort.com.

If you have a service or repair question, please contact your dealer.

**www.empirecomfort.com**