This Owner's Manual is provided and hosted by Appliance Factory Parts.

Appliance Factory Parts
Experts in BBQ, Humidifier, & Appliance Parts
1-800-955-7075

White Mountain Hearth VFDR30LBN-2 Owner's Manual

Shop genuine replacement parts for White Mountain Hearth VFDR30LBN-2

Find Your White Mountain Hearth Fireplace Parts - Select From 539 Models

-------- Manual continues below --------

EMPIRE
COMFORT SYSTEMS
SINCE 1932

INSTALLATION INSTRUCTIONS AND OWNER'S MANUAL

Vented/Vent-Free Burner and Logs

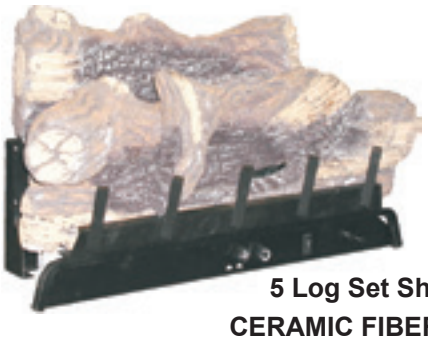

5 Log Set Shown
CERAMIC FIBER LOGS

INSTALLER:

Leave this manual with the appliance.

CONSUMER:

Retain this manual for future reference.

⚠ WARNING

FIRE OR EXPLOSION HAZARD
Failure to follow safety warnings exactly could result in serious injury, death or property damage.

— Do not store or use gasoline or other flammable vapors and liquids in the vicinity of this or any other appliance.

— WHAT TO DO IF YOU SMELL GAS
- Do not try to light any appliance.
- Do not touch any electrical switch; do not use any phone in your building.
- Leave the building immediately.
- Immediately call your gas supplier from a neighbor's phone. Follow the gas supplier's instructions.
- If you cannot reach your gas supplier, call the fire department.

— Installation and service must be performed by a qualified installer, service agency or the gas supplier.

This appliance may be installed in an aftermarket permanently located, manufactured (mobile) home, where not prohibited by local codes.
This appliance is only for use with the type of gas indicated on the rating plate. This appliance is not convertible for use with other gases.

UNVENTED GAS LOG HEATER MODELS

VFDR18LB10N-3	VFDR18LB10P-3
VFDR18LBN-2	VFDR18LBP-2
VFDR24LBN-2	VFDR24LBP-2
VFDR30LBN-2	VFDR30LBP-2
VFDT18LBN-2	VFDT18LBP-2
VFDT24LBN-2	VFDT24LBP-2
VFDT30LBN-2	VFDT30LBP-2
VFDM18LBN-2	VFDM18LBP-2
VFDM24LBN-2	VFDM24LBP-2
VFDM30LBN-2	VFDM30LBP-2

VENTED DECORATIVE APPLIANCE MODELS

VFDR18LB10N-3	VFDR18LB10P-3
VFDR18LBN-2	VFDR18LBP-2
VFDR24LBN-2	VFDR24LBP-2
VFDR30LBN-2	VFDR30LBP-2
VFDM18LBN-2	VFDM18LBP-2
VFDM24LBN-2	VFDM24LBP-2
VFDM30LBN-2	VFDM30LBP-2

DESIGN CERTIFIED

CERTIFIED

⚠ WARNING

If not installed, operated and maintained in accordance with the manufacturer's instructions, this product could expose you to substances in fuel or from fuel combustion which can cause death or serious illness.

This is an unvented gas-fired heater. It uses air (oxygen) from the room in which it is installed. Provisions for adequate combustion and ventilation air must be provided. Refer to page 9.

WATER VAPOR: A BY-PRODUCT OF UNVENTED ROOM HEATERS
Water vapor is a by-product of gas combustion. An unvented room heater produces approximately one (1) ounce (30ml) of water for every 1,000 BTU's (.3KW's) of gas input per hour. Refer to page 6.

TABLE OF CONTENTS

SECTION	PAGE
Important Safety Information	3
Safety Information for Users of LP-Gas	4
Introduction	5
Product Specifications	6
Water Vapor: A By-Product of Unvented Room Heaters	6
General Information	7
Requirements for Canada	8
Provisions for Adequate Combustion & Ventilation Air	9
Clearances	9-10
Combustible Material	11
Fireplace Preparation	11
Installing as a Vented Appliance	12
Before Fully Installing the Appliance	12
Gas Supply	13
VFD(R,T,M)(18,24) & VFDR18LB10 Log Placement (5 Log Set)	14
VDR(R,T,M)30 Log Placement (7 Log Set)	15
Operation Instructions/Flame Appearance	16
Wiring - VFDR Models Only	17
VFDR(18,24,30)LB Lighting Instructions	18
VFDR18LB10(N,P) Lighting Instructions	19
VFDT(18,24,30)LB Lighting Instructions	20
VFDM(18,24,30)LB Lighting Instructions	21
Pilot Flame Characteristics	22-23
Cleaning and Servicing	23
Troubleshooting	24
Master Parts Distributor List	25
How to Order Repair Parts	25
VFDR Series Parts List	26
VFDR Series Parts View	27
VFDR18LB10 Series Parts List	28
VFDR18LB10 Series Parts View	29
VFDT Series Parts List	30
VFDT Series Parts View	31
VFDM Series Parts List	32
VFDM Series Parts View	33
Warranty	34
Appliance Service History	35

IMPORTANT SAFETY INFORMATION

⚠ **DANGER**: Indicates a hazardous situation which, if not avoided, will result in death or serious injury.

⚠ **WARNING**: Indicates a hazardous situation which, if not avoided, could result in death or serious injury.

⚠ **CAUTION**: Indicates a hazardous situation which, if not avoided, could result in minor or moderate injury.

NOTICE: Addresses practices not related to personal injury.

- **An unvented room heater having an input rating of more than 6,000 Btu per hour shall not be installed in a bathroom**
- **An unvented room heater having an input rating of more than 10,000 Btu per hour shall not be installed in a bedroom or bathroom.**
- **Due to high temperatures, the appliance should be located out of traffic and away from furniture and draperies.**
- **Children and adults should be alerted to the hazard of high surface temperature and should stay away to avoid burns or clothing ignition.**
- **Young children should be carefully supervised when they are in the same room with the appliance.**
- **Do not place clothing or other flammable material on or near the appliance.**
- **Avoid the use of scented air fresheners (plug in type air fresheners, etc.) while the log set is in operation. Air fresheners produce a residue in the air similar to candles and may produce a soot like substance.**
- **Avoid the use of scented or decorative candles while the log set is in operation. Candles produce a residue in the air that creates a soot like substance. Burning candles while the log set is operating magnifies the problem. It should be noted that candles, in general, produce soot. The amount of time burned and the quantity of candles burned will determine the amount of soot produced and deposited.**
- **Installation and repair should be done by a QUALIFIED SERVICE PERSON. This appliance should be inspected before use and at least annually by a professional service person. More frequent cleaning may be required due to excessive lint from carpeting, bedding materials, etc. It is imperative that control compartments, burners and circulating air passageways of the appliance be kept clean.**
- **DO NOT use this room heater if any part has been under water. Immediately call a qualified service technician to inspect the room heater and to replace any part of the control system and any gas control which has been under water.**
- **You must operate heater with fireplace screen in place.**
- **Do not place trash, logs or other articles on the log set during operation.**
- **During manufacturing, fabricating and shipping, various components of this appliance are treated with certain oils, films or bonding agents. These bonding agents are not harmful but may produce annoying smoke and smells as they are burned off during initial operation of the appliance. This is a normal temporary occurrence. A window should be opened during the initial bake out period.**
- **Correct installation of the ceramic fiber logs, proper location of the heater and annual cleaning are necessary to avoid potential problems with sooting. Sooting, resulting from improper installation or operation, can settle on surfaces outside the fireplace. See instructions for proper installation.**
- ⚠ **WARNING: Do not allow fans to blow directly into the fireplace. Avoid any drafts that alter burner flame patterns.**
- ⚠ **WARNING: Do not use a blower insert, heat exchanger insert or other accessory not approved for use with this heater.**
- ⚠ **WARNING! This fireplace needs fresh air for ventilation to run properly. This fireplace has an ODS (oxygen depletion sensor) which will shut down the heater if adequate fresh air is not available. See troubleshooting section in the instructions.**
- ⚠ **WARNING: DO NOT operate this appliance unless all components including logs, burners, and controls are in good working condition. Never operate this appliance if any log or twig is broken, or out of their intended position. Refer to the Log set placement instructions for correct log and twig positioning.**
  Replacement components are available through your local dealer as indicated in the How to Order Repair Parts section of the appliance manual.
- **Keep appliance area clear and free from combustible materials, gasoline and other flammable vapors and liquids.**
- ⚠ **WARNING: Failure to keep the primary air opening(s) of the burner(s) clean may result in sooting and property damage.**

⚠ WARNING

When used without adequate combustion and ventilation air, heater may give off CARBON MONOXIDE, an odorless, poisonous gas.

Do not install heater until all necessary provisions are made for combustion and ventilation air. Consult the written instructions provided with the heater for information concerning combustion and ventilation air. In the absence of instructions, refer to the National Fuel Gas Code, ANSI Z223.1/NFPA 54, Air for Combustion and Ventilation, or applicable local codes.

This heater is equipped with a PILOT LIGHT SAFETY SYSTEM designed to turn off the heater if not enough fresh air is available.

DO NOT TAMPER WITH PILOT LIGHT SAFETY SYSTEM!

If heater shuts off, do not relight until you provide fresh air.

If heater keeps shutting off, have it serviced. Keep burner and control compartment clean.

CARBON MONOXIDE POISONING MAY LEAD TO DEATH.

Early signs of carbon monoxide poisoning resemble the flu, with headache, dizziness and/or nausea. If you have these signs, heater may not be working properly. Get fresh air at once! Have heater serviced.

Some people — pregnant women, persons with heart or lung disease, anemia, those under the influence of alcohol , those at high altitudes — are more affected by carbon monoxide than others.

The pilot light safety system senses the depletion of oxygen at its location. If this heater is installed in a structure having a high vertical dimension, the possibility exists that the oxygen supply at the higher levels will be less than that at the heater. In this type of application, a fan to circulate the structure air will minimize this effect. The use of this fan will also improve the comfort level in the structure. When a fan is used to circulate air, it should be located so that the air flow is not directed at the burner.

SAFETY INFORMATION FOR USERS OF LP-GAS

Propane (LP-Gas) is a flammable gas which can cause fires and explosions. In its natural state, propane is odorless and colorless. You may not know all the following safety precautions which can protect both you and your family from an accident. Read them carefully now, then review them point by point with the members of your household. Someday when there may not be a minute to lose, everyone's safety will depend on knowing exactly what to do. If, after reading the following information, you feel you still need more information, please contact your gas supplier.

LP-GAS WARNING ODOR

If a gas leak happens, you should be able to smell the gas because of the odorant put in the LP-Gas. That's your signal to go into immediate action!

- Do not operate electric switches, light matches, use your phone. Do not do anything that could ignite the gas.
- Get everyone out of the building, vehicle, trailer, or area. Do that IMMEDIATELY.
- Close all gas tank or cylinder supply valves.
- LP-Gas is heavier than air and may settle in low areas such as basements. When you have reason to suspect a gas leak, keep out of basements and other low areas. Stay out until firefighters declare them to be safe.
- Use your neighbor's phone and call a trained LP-Gas service person and the fire department. Even though you may not continue to smell gas, do not turn on the gas again. Do not re-enter the building, vehicle, trailer, or area.
- **Finally**, let the service man and firefighters check for escaped gas. Have them air out the area before you return. Properly trained LP-Gas service people should repair the leak, then check and relight the gas appliance for you.

NO ODOR DETECTED - ODOR FADE

Some people cannot smell well. Some people cannot smell the odor of the chemical put into the gas. You must find out if you can smell the odorant in propane. Smoking can decrease your ability to smell. Being around an odor for a time can affect your sensitivity or ability to detect that odor. Sometimes other odors in the area mask the gas odor. People may not smell the gas odor or their minds are on something else. Thinking about smelling a gas odor can make it easier to smell.

The odorant in LP-gas is colorless, and it can fade under some circumstances. For example, if there is an underground leak, the movement of the gas through soil can filter the odorant. Odorants in LP-Gas also are subject to oxidation. This fading can occur if there is rust inside the storage tank or in iron gas pipes.

The odorant in escaped gas can adsorb or absorb onto or into walls, masonry and other materials and fabrics in a room. That will take some of the odorant out of the gas, reducing its odor intensity.

LP-Gas may stratify in a closed area, and the odor intensity could vary at different levels. Since it is heavier than air, there may be more odor at lower levels. Always be sensitive to the slightest gas odor. If you detect any odor, treat it as a serious leak. Immediately go into action as instructed earlier.

SOME POINTS TO REMEMBER

- **Learn to recognize the odor of LP-gas.** Your local LP-Gas Dealer can give you a "Scratch and Sniff" pamphlet. Use it to find out what the propane odor smells like. If you suspect that your LP-Gas has a weak or abnormal odor, call your LP-Gas Dealer.
- If you are not qualified, do not light pilot lights, perform service, or make adjustments to appliances on the LP-Gas system. If you are qualified, consciously think about the odor of LP-Gas prior to and while lighting pilot lights or performing service or making adjustments.
- Sometimes a basement or a closed-up house has a musty smell that can cover up the LP-Gas odor. Do not try to light pilot lights, perform service, or make adjustments in an area where the conditions are such that you may not detect the odor if there has been a leak of LP-Gas.
- Odor fade, due to oxidation by rust or adsorption on walls of new cylinders and tanks, is possible. Therefore, people should be particularly alert and careful when new tanks or cylinders are placed in service. Odor fade can occur in new tanks, or reinstalled old tanks, if they are filled and allowed to set too long before refilling. Cylinders and tanks which have been out of service for a time may develop internal rust which will cause odor fade. If such conditions are suspected to exist, a periodic sniff test of the gas is advisable. **If you have any question about the gas odor, call your LP-gas dealer. A periodic sniff test of the LP-gas is a good safety measure under any condition.**
- If, at any time, you do not smell the LP-Gas odorant and you think you should, assume you have a leak. Then take the same immediate action recommended above for the occasion when you do detect the odorized LP-Gas.
- If you experience a complete "gas out," (the container is under no vapor pressure), turn the tank valve off immediately. If the container valve is left on, the container may draw in some air through openings such as pilot light orifices. If this occurs, some new internal rusting could occur. If the valve is left open, then treat the container as a new tank. Always be sure your container is under vapor pressure by turning it off at the container before it goes completely empty or having it refilled before it is completely empty.

INTRODUCTION

IMPORTANT: Read all instructions carefully before starting installation. Failure to follow these installation instructions may result in a possible fire hazard and will void the warranty.

Save this manual for future reference.

Please read this manual before installing and using the appliance.

Instructions to Installer

1. Installer must leave instruction manual with owner after installation.
2. Installer must have owner fill out and mail warranty card supplied with unvented room heater/vented decorative appliance.
3. Installer should show owner how to start and operate unvented room heater/vented decorative appliance.

Always consult your local Building Department regarding regulations, codes or ordinances which apply to the installation of an unvented room heater/vented decorative appliance.

This appliance may be installed in an aftermarket* manufactured (mobile) home, where not prohibited by state or local codes.

*Aftermarket: Completion of sale, not for purpose of resale, from the manufacturer.

Well Head Gas Installations

Some natural gas utilities use “well head” gas. This may affect the Btu output of the unit and promote sooting. Units shall not be converted to use well head gas.

This appliance is only for use with the type of gas indicated on the rating plate. This appliance is not convertible for use with other gases.

Solid-fuels shall not be burned in a fireplace where a vented decorative appliance is installed.

A vented decorative appliance must be installed only in a solid-fuel burning fireplace with a working flue and constructed of non-combustible material.

Any alteration of the original design, installed other than as shown in these instructions or use with a type of gas not shown on the rating plate is the responsibility of the person and company making the change.

Important

All correspondence should refer to complete Model Number, Serial Number and type of gas.

Attention: During initial use of log you will detect an odor as the log is cured.

Notice: During initial firing of this unit, its paint will bake out, and smoke will occur. To prevent triggering of smoke alarms, ventilate the room in which the unit is installed.

⚠ WARNING

This appliance is for installation only in a solid-fuel burning masonry or UL 127 factory-built fireplace or in a listed ventless firebox enclosure. It has been design certified for these installations. Exception: DO NOT install this appliance in a factory-built fireplace that includes instructions stating it has not been tested or should not be used with unvented gas logs.

⚠ WARNING

Any modification to this unvented gas heater or its controls can be dangerous. Improper installation or use of the heater can cause serious injury or death from fire, burns, explosion or carbon monoxide poisoning.

ACCESSORIES FOR VFDR, VFDT, & VFDM		
	Description	**Color**
EK-1	Embers Kit	
PE-20	Platinum Embers	
ELH-1	Fireplace Hood for Vent-Free Logs	Black
ELH-2	Fireplace Hood for Vent-Free Logs	Brass
ACCESSORIES FOR VFDR ONLY		
FRBC	Battery Operated Remote Control	
FRBTC	Battery Operated Remote Control with Thermostat	
FREC	Electric Remote Control	
FWS	Wall Switch	
TRW	Remote Wall Thermostat	
TMV	Wall Thermostat, Millivolt - Reed Switch	

NOTICE: Thermostats are for Vent-Free Applications only.

PRODUCT SPECIFICATIONS

Model	Gas	Valve Type	Regulator Pressure Setting	Gas Inlet Pressure Max	Gas Inlet Pressure Minimum
VFDR(18,24,30)LB	Natural	Millivolt	3.5" W.C.	10.5" W.C.	4.5" W.C.
	Propane		10.0" W.C.	13.0" W.C.	11.0" W.C.
VFDR18LB10	Natural	Millivolt	3.5" W.C.	10.5" W.C.	5.0" W.C.
	Propane		10.0" W.C.	13.0" W.C.	11.0" W.C.
VFDT(18,24,30)LB	Natural	Thermostat	6.0" W.C.	10.5" W.C.	7.0" W.C.
	Propane		10.0" W.C.	13.0" W.C.	11.0" W.C.
VFDM(18,24,30)LB	Natural	Manual	6.0" W.C.	10.5" W.C.	7.0" W.C.
	Propane		10.0" W.C.	13.0" W.C.	11.0" W.C.

Model	BTU/hr. Max. Rate	BTU/hr. Med. Rate	BTU/hr. Min. Rate	Air Shutter Opening
VFDR18LB10N	10,000	N/A	N/A	1/16"
VFDR18LB10P	10,000	N/A	N/A	3/16"
VFDR18LBN	28,000	N/A	19,000	1/8"
VFDR18LBP	28,000	N/A	22,000	5/16"
VFDR24LBN	34,000	N/A	24,000	1/8"
VFDR24LBP	34,000	N/A	26,000	5/16"
VFDR30LBN	40,000	N/A	27,000	1/8"
VFDR30LBP	40,000	N/A	31,000	3/8"
VFDT18LBN	28,000	N/A	19,000	1/8"
VFDT18LBP	28,000	N/A	22,000	5/16"
VFDT24LBN	34,000	N/A	24,000	1/8"
VFDT24LBP	34,000	N/A	26,000	5/16"
VFDT30LBN	40,000	N/A	27,000	1/8"
VFDT30LBP	40,000	N/A	31,000	3/8"
VFDM18LBN	28,000	23,000	19,000	1/8"
VFDM18LBP	28,000	25,000	22,000	5/16"
VFDM24LBN	34,000	29,000	24,000	1/8"
VFDM24LBP	34,000	30,000	26,000	5/16"
VFDM30LBN	40,000	32,000	27,000	1/8"
VFDM30LBP	40,000	36,000	31,000	3/8"

NOTICE: Thermostats are for Vent-Free Applications only.

WATER VAPOR: A BY-PRODUCT OF UNVENTED ROOM HEATERS

Water vapor is a by-product of gas combustion. An unvented room heater produces approximately one (1) ounce (30ml) of water for every 1,000 BTU's (.3KW's) of gas input per hour.

Unvented room heaters must be used as supplemental heat (a room) rather than a primary heat source (an entire house). In most supplemental heat applications, the water vapor does not create a problem. In most applications, the water vapor enhances the low humidity atmosphere experienced during cold weather.

The following steps will help insure that water vapor does not become a problem.

1. Be sure the heater is sized properly for the application, including ample combustion air and circulation air.
2. If high humidity is experienced, a dehumidifier may be used to help lower the water vapor content of the air.
3. Do not use an unvented room heater as the primary heat source (an entire house).

GENERAL INFORMATION

This is an unvented gas-fired heater. It uses air (oxygen) from the room in which it is installed. Provisions for adequate combustion and ventilation air must be provided.

Keep room area clear and free from combustible materials, gasoline and other flammable vapors and liquids.

Unvented gas heaters are a supplemental zone heater. They are not intended to be a primary heating appliance. Water vapor produced by an unvented heater can create moisture problems in a home when operated for extended periods of time.

During manufacturing, fabricating and shipping, various components of this appliance are treated with certain oils, films or bonding agents. These chemicals are not harmful but may produce annoying smoke and smells as they are burned off during the initial operation of the appliance; possibly causing headaches or eye or lung irritation. This is a normal and temporary occurrence.

The initial break-in operation should last 2-3 hours with the burner at the highest setting. Provide maximum ventilation by opening windows or doors to allow odors to dissipate. Any odors remaining after this initial break-in period will be slight and will disappear with continued use.

This appliance must not be used with glass doors in the closed position. This can lead to pilot outages and severe sooting outside the fireplace.

Do not use this room heater if any part has been under water. Immediately call a qualified service technician to inspect the room heater and replace any part of the control system and any gas control which has been under water.

⚠ WARNING

This appliance is equipped for (natural or propane) gas. Field conversion is not permitted.

Before you get started

Carefully inspect the contents for shipping damage. If any parts are missing or damaged, immediately inform the dealer from whom you purchased the appliance. Do not attempt to install any part of the appliance unless you have all parts in good condition.

Make sure you have received all parts:

Check your packing list to verify that all listed parts have been received. You should have the following:

- Gas log grate/burner assembly.
- Two (2) masonry anchoring screws and two (2) 10 x 1/2" black sheet metal anchoring screws.
- Ceramic Log Set - (5 Piece on VFDR(18,24), VFDT(18,24) and VFDM(18,24)) (7 Piece on VFDR30, VFDT30 and VFDM30)
- Plastic bag containing glowing embers (rock wool) for burner coverage.

The millivolt controlled heater may be operated with optional devices for REMOTE/OFF/ON functions.

a. Wall switch or thermostat with wire.
b. Hand held remote control with ON/OFF switch or thermostat.

Handle the gas log burner assembly by the grate and legs only. Do not pick the unit up by the burner.
Gloves are recommended when handling logs to prevent skin irritation. Logs are fragile - Handle with care.

Qualified Installing Agency

Installation and replacement of gas piping, gas utilization equipment or accessories and repair and servicing of equipment shall be performed only by a qualified agency. The term "qualified agency" means any individual, firm, corporation, or company that either in person or through a representative is engaged in and is responsible for (a) the installation, testing, or replacement of gas piping or (b) the connection, installation, testing, repair, or servicing of equipment; that is experienced in such work; that is familiar with all precautions required, and that has complied with all the requirements of the authority having jurisdiction.

Commonwealth of Massachusetts: The installation must be made by a licensed plumber or gas fitter in the Commonwealth of Massachusetts.

Sellers of unvented propane or natural gas-fired supplemental room heaters shall provide to each purchaser a copy of 527 CMR-30 upon sale of the unit.

In the Commonwealth of Massachusetts, unvented propane and natural gas-fired space heaters shall be prohibited in bedrooms and bathrooms.

The installation must conform with local codes or, in the absence of local codes, with the *National Fuel Gas Code, ANSI Z223.1.**
**Available from the American National Standards Institute, Inc. 11 West 42nd St., New York, N.Y. 10018.*

High Altitude

When installing this unit at an elevation above 2,000 feet (in the United States), it may be necessary to decrease the input rating by changing the existing burner orifice to a smaller size. Generally, input should be reduced 4 percent for each 1,000 feet above sea level. However, if the heating value of the gas has been reduced, this general rule may not apply. Check with local gas utility for proper orifice size identification.

REQUIREMENTS FOR CANADA

This unit **cannot** be installed in a UNVENTED application, this unit **can only** be installed as a VENTED application with these requirements.

IMPORTANT SAFETY INFORMATION

This unit complies with ANSI Z21.60and CGA 2.26 Decorative Gas Appliances For Installation In Solid Fuel Burning Fireplaces. Do not burn wood or solid fuels in a fireplace where a decorative gas log set is installed. This appliance is for installation only in a solid fuel burning fireplace, masonry fireplace or manufactured fireplace.

Warning: Any modification to this gas log set or to controls can be dangerous. Improper installation or use of the gas log set can cause serious injury or death from fire, burns, explosion or carbon monoxide poisoning.

1. Please follow all local codes regarding installation, combustion and ventilation air or in the absence of local codes follow the National Fuel Gas Code ANSI Z223.1(U.S. installation), or CAN/CGA-B149, Installation Code (Canada installation).
2. Proper installation, burner pan location and log placement is important to achieve optimum look and performance of your gas log set. The logs have been designed for easy location and placement on the grate and must be followed for proper operation.
3. Do not operate this log set with glass doors in the closed position. A fireplace screen must be in place when the log set is burning. Adequate combustion air must be provided for proper venting. All flames should go up and out the top of the firebox into the flue vent. If any flames float or curl forward into the room do not operate appliance. Check for an open flue and adequate combustion air into the room. A damper clamp must be installed on the firebox damper to maintain an open flue vent condition. Refer to page 12 INSTALLING DAMPER CLAMP
4. Young children must be carefully supervised when they are in the same room as the gas log while in operation. Do not place stockings, clothing or any flammable material above or near the fireplace.
5. Do not substitute or use materials other than those supplied for use with the log set.
6. Also refer to IMPORTANT SAFETY INFORMATION on page 3 of this manual

⚠ WARNING

DO NOT OPERATE THIS GAS LOG SET WITH GLASS DOORS CLOSED

- Clothing or other flammable material should not be placed on or near the appliance.
- Do not place trash or other articles on the log set during operation.
- During manufacturing, fabricating and shipping, various components of this appliance are treated with certain oils, films or bonding agents. These bonding agents are not harmful but may produce annoying smoke and smells as they are burned off during initial operation of the appliance. This is a normal temporary occurrence. A window should be opened during the initial bake out period.
- Keep burner and control compartment clean.

⚠ WARNING

Before installing in a solid fuel burning fireplace, the chimney flue and firebox must be cleaned of soot, creosote, ashes and loose paint by a qualified chimney cleaner.

- Installation and repair should be done by a qualified service person. The appliance should be inspected before use and at least annually by a qualified service person. More frequent cleaning may be required due to excessive lint from carpeting, bedding materials, etc. It is imperative that control compartments, burners and circulating air passageways of the appliance be kept clean.
- **Do not** put anything around the fireplace that will obstruct the flow of ventilation air.
- **Do** keep the appliance area clear and free from combustible material, gasoline and other flammable vapors and liquids.
- A yearly examination and cleaning of the venting system of the solid-fuel burning fireplace must be performed by a qualified agency.
- **Do** make a periodic visual check of pilot and burners. Clean and replace damaged parts.
- **Do not** use this appliance if any part has been under water. Immediately call a qualified service technician to inspect the appliance and to replace any part of the control system and any gas control which has been under water.
- Never burn solid fuels in fireplace where a gas log set is installed.
- This unit complies with ANSI Z21.60 Decorative Vented Appliances for Solid Fuel Burning Fireplaces. State or local codes may only allow operation of this appliance in a vented configuration. Check your state or local codes.

PROVISIONS FOR ADEQUATE COMBUSTION & VENTILATION AIR

This heater shall not be installed in a confined space unless provisions are provided for adequate combustion and ventilation air.

A confined space is an area with volume less than 50 cubic feet per 1,000 Btuh of the combined input rates of all appliances drawing combustion air from that space. Small areas such as equipment rooms are confined spaces. Furnaces installed in a confined space which supply heated air to areas outside the space must draw return air from outside the space through tightly sealed return air ducts. A confined space must have 2 openings into the space for combustion air. One opening must be within 12 inches of the ceiling and the other must be within 12 inches of the floor. The required sizing of these openings is determined by whether inside or outside air is used to support combustion, the method by which the air is brought to the space (vertical or horizontal duct) and by the total input rate of all appliances in the space.

Unusually Tight Construction

The air that leaks around doors and windows may provide enough fresh air for combustion and ventilation. However, in buildings of unusually tight construction, you must provide additional fresh air.

Unusually tight construction is defined as construction where:

a. Walls and ceilings exposed to the outside atmosphere have a continuous water vapor retarder with a rating of one perm or less with openings gasketed or sealed, and
b. Weather-stripping has been added on openable windows and doors, and
c. Caulking or sealants are applied to areas such as joints around window and door frames, between sole plates and floors, between wall-ceiling joints, between wall panels, at penetrations for plumbing, electrical, and gas lines, and at other openings.

If your home meets all of the three criteria above, you must provide additional fresh air.

⚠ WARNING

If the area in which the heater may be operated is smaller than that defined as an unconfined space or if the building is of unusually tight construction, provide adequate combustion and ventilation air by one of the methods described in the National Fuel Gas Code, ANSI Z223.1/NFPA 54, Air for Combustion and Ventilation, or applicable local codes.

Example of Large Room with 1/2 Wall divider.

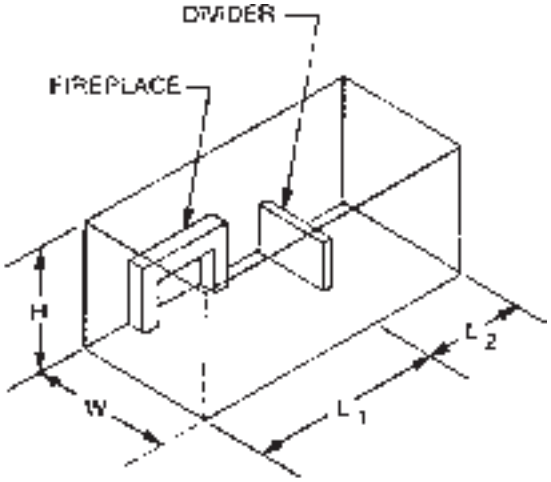

Figure 1

The following formula can be used to determine the maximum heater rating per the definition of unconfined space:

$$\text{Btu/Hr} = \frac{(L_1 + L_2)\text{FT} \times (W)\text{FT} \times (H)\text{FT}}{50} \times 1000$$

If the area in which the heater may be operated is smaller than that defined as an unconfined space, provide adequate combustion and ventilation air by one of the methods described in the *National Fuel Gas Code, ANSI Z223.1/NFPA54.*

Adhere to all codes, or in their absence, the latest edition of *THE NATIONAL FUEL GAS CODE ANSI Z223.1/NFPA54* which can be obtained from:

American National Standards Institute
11 West 42nd St.
New York, NY 10018
OR
National Fire Protection Association, Inc.
Batterymarch Park
Quincy, MA 02269

CLEARANCES

Minimum Dimensions For Solid Fuel Burning Fireplaces UL127 Factory Built Fireplaces (Figure 2)

Model	A	B	C	D
VFDR18LB10	17"	12"	28"	17"
VFD(R,T,M)18	17"	12"	28"	17"
VFD(R,T,M)24	23"	12"	30"	18"
VFD(R,T,M)30	26"	12"	34"	20"

The dimensions shown and defined in the fireplace manufacturer's instructions are minimum clearances to maintain in installing this heater. Left and right clearances are determined when facing the front of the heater.

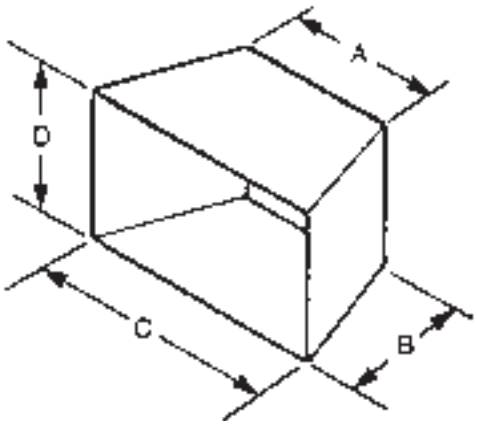

Figure 2

Glass Doors

Make sure that glass doors are open during all operations of the logset. The opening of the glass door frame should be the dimension used for the minimum front opening of the firebox.

Follow these instructions to ensure safe installation.
Failure to follow instructions exactly can create a fire hazard.

Sidewall & Ceiling Clearances (Figure 3)

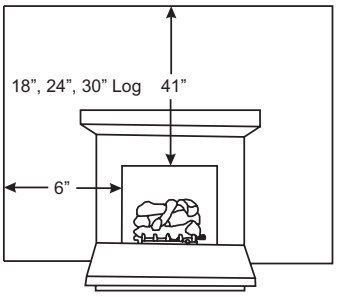

Figure 3

The sides of the fireplace opening must be 6" from any combustible wall. The ceiling must be at least 41" (for 18", 24" and 30" logs) from the fireplace opening.

Mantel Clearances Without Hood (Figure 4)

You must have non-combustible materials above the fireplace opening. Non-combustible material must extend at least 12" above fireplace opening. With sheet metal, you must have non-combustible material behind it.

Heat resistant materials such as slate and marble must be **at least 1/2" thick. Sheet metal should not be installed onto combustible material.**

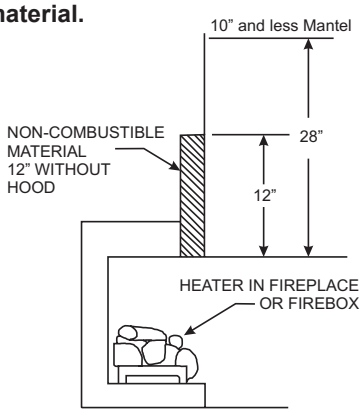

Figure 4

If your installation does not meet the above clearances, you must proceed to one of the following steps:

- Use a hood.
- Operate the heater with flue damper open.
  See page 12 for Installing as a Vented Appliance.
- Raise the mantel to the proper height.
- Remove the mantel.

Non-Combustible Material Distance	Requirements for Safe Installation
12" or more	Non-combustible material
Less than 12"	Non-combustible material must be extended to at least 8" with the installation of the optional fireplace hood. If you cannot extend non-combustible material at least 8", you must operate heater with flue damper open.

Mantel Clearances with Hood (Figure 5)

You must have non-combustible materials above the fireplace opening. Non-combustible material must extend at least 8" above fireplace opening. With sheet metal, you must have non-combustible material behind it.

Heat resistant materials such as slate and marble must be at least 1/2" thick. Sheet metal should not be installed onto combustible material.

Example: A mantel may project from the wall a maximum of 2" at a minimum of 13-1/2" above the opening, and a maximum of 6" at a minimum of 15" above the opening.

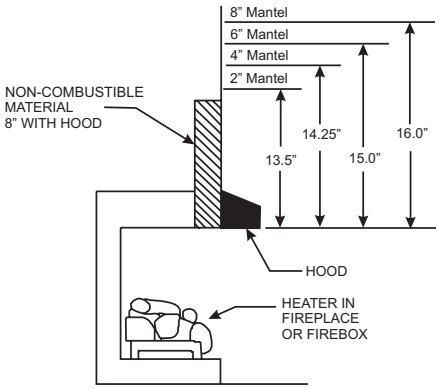

Figure 5

If your installation does not meet the above minimum clearances, you must proceed to one of the following steps:

- Operate the heater with the flue damper open.
  See page 12 for Installing as a Vented Appliance.
- Raise the mantel to the proper height.
- Remove the mantel.

Floor Clearance (Figure 6)

If installing heater at floor level, the minimum distance to combustibles is “0” inches.

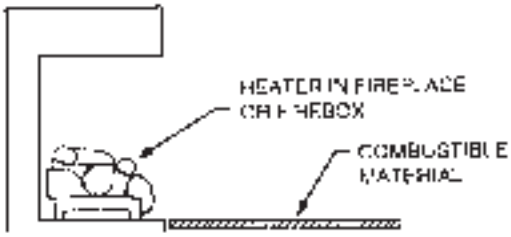

Figure 6

Notice for Finishing Materials

The wall above the fireplace will become hot. Install the non-combustible board supplied with the fireplace before adding paint, tile or stone. Attach tile or other non-combustible products to the fireplace face and to the non-combustible area (Figures 29 and 30) using adhesives designed for high-temperature applications. Follow the manufacturer's instructions for application and curing times. Heat from the fireplace may cause incorrectly installed materials to fail. If you are painting above the fireplace, use a coating designed for high temperature environments and follow the manufacturer's instructions for surface preparation, application and curing. Heat from the fireplace may cause incorrectly applied coatings to fail or discolor.

Non-combustible Board Requirements

1. Do not attach non-combustible board to the fireplace. Attach non-combustible board only to side studs and header board.
2. Predrill holes into non-combustible board. Counterlink holes are recommended.
3. Use only high-temperature adhesive and high-temperature paints with the non-combustible board.
4. Do not over-tighten screws going through non-combustible board.

COMBUSTIBLE MATERIAL

Do not attach combustible material to the mantel of your fireplace. This is a fire hazard.

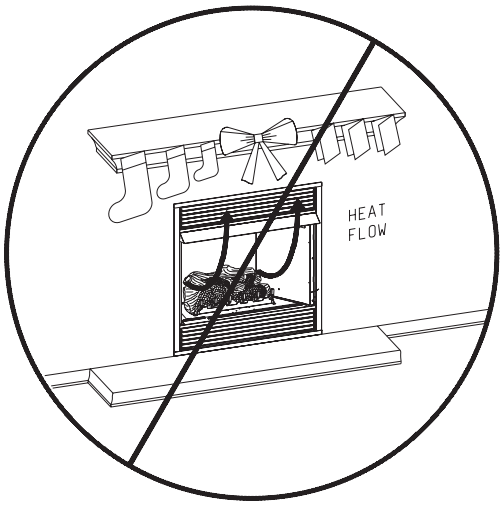

Figure 7

FIREPLACE PREPARATION

- Turn off gas supply to fireplace or firebox.
- Have the fireplace floor and chimney professionally cleaned to remove ashes, soot, creosote or other obstructions. Have this cleaning performed annually after installation.
- Seal any fresh air vents or ash clean-out doors located on floor or wall of fireplace. If not, drafting may cause pilot outage or sooting. Use a heat-resistant sealant. Do not seal chimney flue damper.

Install and operate the appliance as directed in this manual.

FOR FACTORY BUILT FIREPLACES
FREE OPENING AREA OF CHIMNEY DAMPER FOR VENTING COMBUSTION PRODUCTS FROM DECORATIVE APPLIANCES FOR INSTALLATION IN SOLID FUEL BURNING FIREPLACES

	Appliance Input Rate (BTU/hr)		
	20	30	40
Chimney Height* (ft)	**Minimum Opening** (sq. in.)**		
10	11.3	16.6	22.1
15	8.6	12.6	17.3
20	7.5	10.8	14.5
25	6.6	9.6	12.6
30	6.2	9.1	11.3
35	5.7	8.0	10.8
40	5.3	7.5	10.2

* Height is from hearth to top of chimney and the minimum height is 10 feet.

** Chart shows minimum opening (sq. in.) for given height and input rate.

FOR MASONRY BUILT FIREPLACES
FREE OPENING AREA OF CHIMNEY DAMPER FOR VENTING COMBUSTION PRODUCTS FROM DECORATIVE APPLIANCES FOR INSTALLATION IN SOLID FUEL BURNING FIREPLACES

	Appliance Input Rate (BTU/hr)		
	20	30	40
Chimney Height* (ft)	**Minimum Opening** (sq. in.)**		
6	17.6	25.7	33.8
8	16.5	23.7	31.2
10	15.1	21.7	28.7
15	14.1	19.9	26.1
20	12.9	18.5	23.7
30	12.2	16.9	21.6

* Height is from hearth to top of chimney and the minimum height is 6 feet.

** Chart shows minimum opening (sq. in.) for given height and input rate.

INSTALLING AS A VENTED APPLIANCE

Notice (Damper Clamp Installation)
When installing your log set as a vented installation the damper clamp must be used.

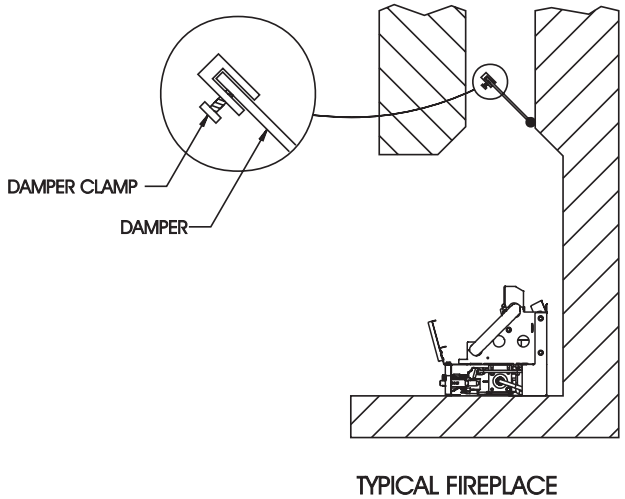

Figure 8

When installing your log set as a vent-free installation the damper clamp can be used to eliminate the potential for odors when burning the logs for the first time.

Installing Damper Clamp (Figure 8)
Remove all ashes or other debris from the fireplace. If the fireplace is equipped with an ash dump be sure to seal the door with furnace cement or high temperature silicone. Be sure to check the damper for proper operation and verify that the flue passageway is open.

Place the clamp over the lip of the damper and tighten the hold down bolt until the clamp is securely attached to the damper. This will prevent the damper from accidentally closing.

Manual and millivolt controlled gas logs may be installed as a vented decorative log set in compliance with ANSI Z21.60 and National Fuel Gas Code. When the gas logs are operated with the damper open, non-combustible material and minimum mantel requirements do not apply.

BEFORE FULLY INSTALLING THE APPLIANCE

- Turn off the gas supply to the fireplace or firebox.
- Seal any fresh air vents and/or ash clean-out doors located on the floor or wall of the fireplace. If left unsealed, drafting may cause pilot outage or sooting. Use a heat resistant sealant. Do not seal the chimney flue damper.

Before installing in a solid fuel burning fireplace, the chimney flue and firebox must be cleaned of soot, creosote, ashes and loose paint by a qualified chimney cleaner.

You must secure the gas log heater to the fireplace floor. If not, the entire unit may move when you adjust the controls. Movement of unit may cause shifting of the gas logs which leads to sooting and improper burning. Grate movement could cause a gas leak.

Special care is required if you are installing the unit into a sunken fireplace. You must raise the fireplace floor to allow access to gas log controls. This will insure adequate air flow and guard against sooting. Raise the fireplace floor using noncombustible materials.

Assembly Procedure: (Figure 9)

1. Center the gas log unit in the fireplace or firebox. Make certain the front feet of the grate sit inside the front edge of the fireplace or firebox.
2. An anchor hole is provided in the two bottom side members of the grate frame. After centering the grate correctly, mark the hole positions on the fireplace/firebox floor. Drill two (2) 5/32" diameter holes approximately 1-1/2" deep for masonry screws or 1/8" hole for sheet metal screws.
3. Anchor the grate to the fireplace/firebox floor using the screws provided. **Refer to Figure 9.**

Proper installation of the grate is essential to prevent any movement of the gas logs and controls during operation.

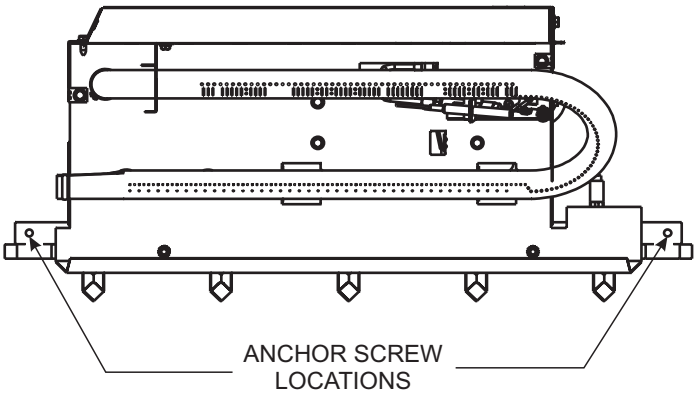

Figure 9

GAS SUPPLY

Check all local codes for requirements, especially for the size and type of gas supply line required.

Recommended Gas Pipe Diameter

Pipe Length	Schedule 40 Pipe Inside Diameter		Tubing, Type L Outside Diameter	
	Nat.	L.P.	Nat.	L.P.
0-10 feet 0-3 meters	1/2” 12.7mm	3/8” 9.5mm	1/2” 12.7mm	3/8” 9.5mm
10-40 feet 4-12 meters	1/2” 12.7mm	1/2” 12.7mm	5/8” 15.9mm	1/2” 12.7mm
40-100 feet 13-30 meters	1/2” 12.7mm	1/2” 12.7mm	3/4” 19mm	1/2” 12.7mm
100-150 feet 31-46 meters	3/4” 19mm	1/2” 12.7mm	7/8” 22.2mm	3/4” 19mm

NOTICE: Never use plastic pipe. Check to confirm whether your local codes allow copper tubing or galvanized.

NOTICE: Since some municipalities have additional local codes, it is always best to consult your local authority and installation code.

Installing a New Main Gas Cock

Each appliance should have its own manual gas cock.

A manual main gas cock should be located in the vicinity of the unit. Where none exists, or where its size or location is not adequate, contact your local authorized installer for installation or relocation.

Compounds used on threaded joints of gas piping shall be resistant to the action of liquefied petroleum gases. The gas lines must be checked for leaks by the installer. This should be done with a soap solution watching for bubbles on all exposed connections, and if unexposed, a pressure test should be made.

Never use an exposed flame to check for leaks. Appliance must be disconnected from piping at inlet of control valve and pipe capped or plugged for pressure test. Never pressure test with appliance connected; control valve will sustain damage!

A gas valve and ground joint union should be installed in the gas line upstream of the gas control to aid in servicing. It is required by the National Fuel Gas Code that a drip line be installed near the gas inlet. This should consist of a vertical length of pipe tee connected into the gas line that is capped on the bottom in which condensation and foreign particles may collect.

GAS SUPPLY PIPING

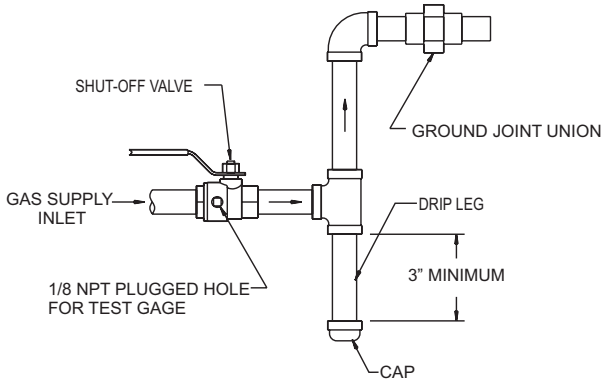

FLEXIBLE GAS LINE CONNECTION

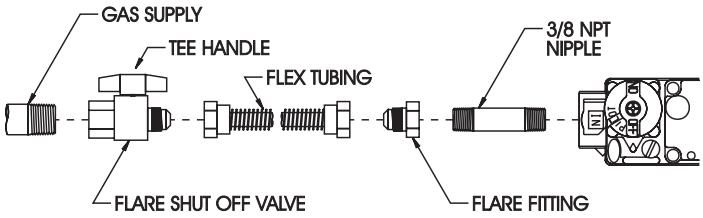

RIGID GAS LINE CONNECTION

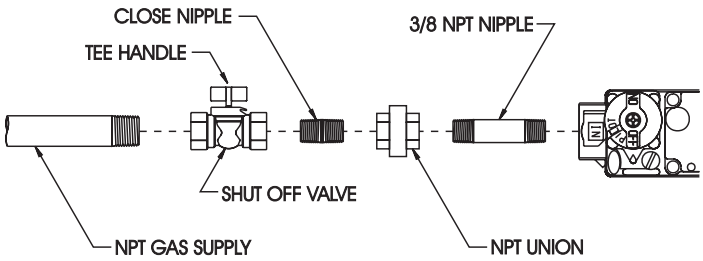

Figure 10

The use of the following gas connectors is recommended:

— ANS Z21.24 Appliance Connectors of Corrugated Metal Tubing and Fittings

— ANS Z21.45 Assembled Flexible Appliance Connectors of Other Than All-Metal Construction

The above connectors may be used if acceptable by the authority having jurisdiction. The state of Massachusetts requires that a flexible appliance connector cannot exceed three feet in length.

Pressure Testing of the Gas Supply System

1. To check the inlet pressure to the gas valve, a 1/8" (3.175mm) N.P.T. plugged tapping, accessible for test gauge connection, must be placed immediately upstream of the gas supply connection to the appliance.
2. The appliance and its individual shutoff valve must be disconnected from the gas supply piping system during any pressure testing of that system at test pressures in excess of 1/2 psig (3.5 kPa).
3. The appliance must be isolated from the gas supply piping system by closing its individual manual shutoff valve during any pressure testing of the gas supply piping system at test pressures equal to or less than 1/2 psig (3.5 kPa).

⚠ CAUTION

If the gas pressure exceeds the maximum limits listed on page 6 of this manual or on the installed gas valve, it will result in a hazardous condition.

VFD(R,T,M)(18,24) & VFDR18LB10 LOG PLACEMENT (5 LOG SET)

Before you begin: if you are installing logs onto the VFD(R,T,M)18 or VFD(R,T,M)24 models, this burner assembly is supplied with a set of five ceramic fiber logs. Do not handle these logs with your bare hands! Always wear gloves to prevent skin irritation from ceramic fibers. After handling logs, wash your hands gently with soap and water to remove any traces of fibers.

The positioning of the logs is critical to the safe and clean operation of this burner assembly. Sooting and other problems may result if the logs are not properly and firmly positioned on the burner assembly. Refer to **Figure 11** and **Figure 12** and corresponding **'WARNING:'** when completing following log placement instructions.

1. Place front logs (#1 and #2) between front grate flange and main burner. Align notches on front logs with locator tabs in base.
2. Place middle log (#3) between front and rear loop of burner. Note: Do not place log on top of pilot assembly.
3. Place rear log (#4) on rear log shelf. Bottom flange of log must be placed between the log shelf and burner tube.
4. **This step is optional for VFDR18LB10 log sets.** For 18" logsets, place front twig (#5) onto (#1) log and flat area on (#3) log. For 24" logsets, place front twig #5 onto two pins on #3 log (if applicable). The bottom of the front twig is to be placed behind the grate tang that is second from the left.

EMBER MATERIAL PLACEMENT ON BURNER

5. After all logs are positioned properly, apply Rockwool ember material to the front burner port area. To apply, carefully separate the ember material into small amounts no larger than "dime size" pieces. Fluffed up pieces one layer thick on top of the burner generally works best, and will provide the best ember glow. Do not place ember material more than one layer thick. No more than (2) two small packets of ember material (part no. 15998) evenly placed on the burner, is recommended on VFDR18 and VFDR24 models. Using additional ember material will decrease the amount of ember glow effect. Extra ember material should be saved for future ember applications as necessary. **See Figure 12.**

Description	Part #
VFD(R,T,M)18 Embers	15998
VFD(R,T,M)24 Embers	15998
VFD(R,T,M)30 Embers	15999
Platinum Bright Embers	PE20-1

NOTICE: A single layer of embers is to be used when applying Platinum Bright Embers (alone or in combination with standard embers) to the burner.

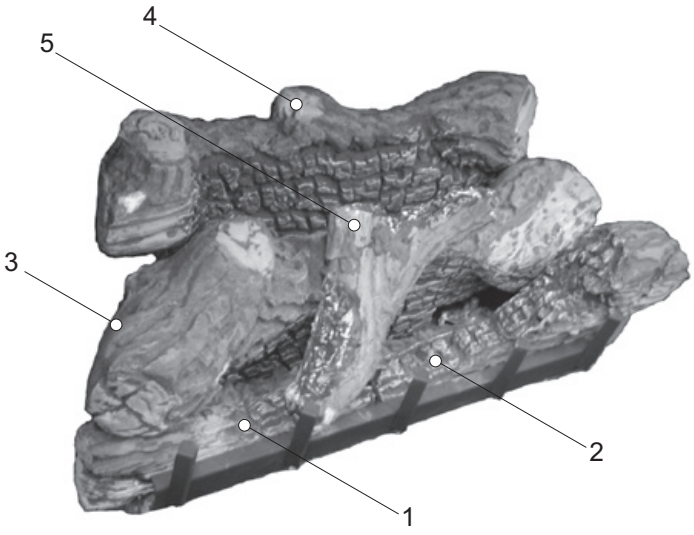

Figure 11

⚠ WARNING

Failure to position the parts in accordance with this diagram or failure to use only parts specifically approved with this appliance may result in property damage or personal injury.

Attention: Do not use Figure 12 or Figure 13 to order logs. Refer to Parts Lists and Parts Views to order logs and/or ember material for your appropriate model.

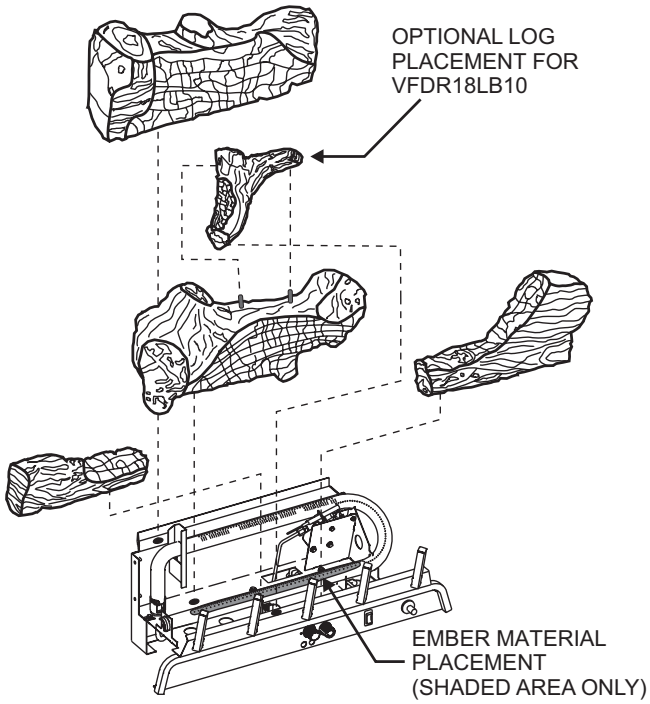

Figure 12

VFD(R,T,M)30 LOG PLACEMENT (7 LOG SET)

Before you begin: If you are installing logs onto the VFD(R,T,M)30 model, this burner assembly place is supplied with a set of seven ceramic fiber logs. Do not handle these logs with your bare hands. Always wear gloves to prevent skin irritation from ceramic fibers. After handling logs, wash your hands gently with soap and water to remove any traces of fiber.

The positioning of logs is critical to safe and clean operation of this burner assembly. Sooting and other problems may result if the logs are not properly and firmly positioned on the burner assembly. Refer to **Figure 13** and **Figure 14** and corresponding **WARNING:** when completing following log placement steps.

1. Place front logs (#1, #2, and #3) between grates and main burner. Align notches on front logs with locator tabs in base.
2. Place middle log (#4) between front and rear loop of burner. ***NOTICE***: Do not place on top of pilot assembly.
3. Place rear log (#5) on rear log shelf. Bottom flange is to be placed between the log shelf and burner tube.
4. Place front twig (#6) onto two pins on middle log (#4) (if applicable) and bottom end of front twig to the back side of the grate tang (4th one from the left).
5. Place the rear twig (#7) onto two pins on rear log (#5) (if applicable) and over the front of the front twig.

Ember Material Placement on Burner

6. After all logs are properly positioned, place small "dime" size pieces of Rockwool lightly across the front burner tube ports. Place the ember material (Rockwool pieces) side by side. Do not stack more than one layer of embers across the burner ports. No more than (1) one packet of ember material (part number 15999) evenly placed on the burner, is recommended on VFDR30 models. **See Figure 14.**

Description	Part #
VFD(R,T,M)18 Embers	15998
VFD(R,T,M)24 Embers	15998
VFD(R,T,M)30 Embers	15999
Platinum Bright Embers	PE20-1

NOTICE: A single layer of embers is to be used when applying Platinum Bright Embers (alone or in combination with standard embers) to the burner.

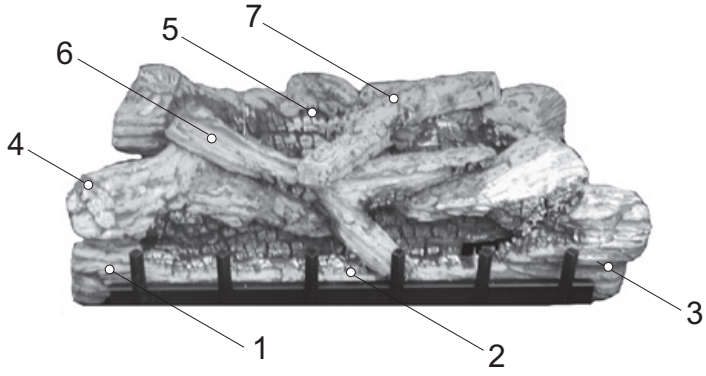

Figure 13

⚠ WARNING

Failure to position the parts in accordance with this diagram or failure to use only parts specifically approved with this appliance may result in property damage or personal injury.

Attention: Do not use Figure 13 or Figure 14 to order logs. Refer to Parts Lists and Parts Views to order logs and/or ember material.

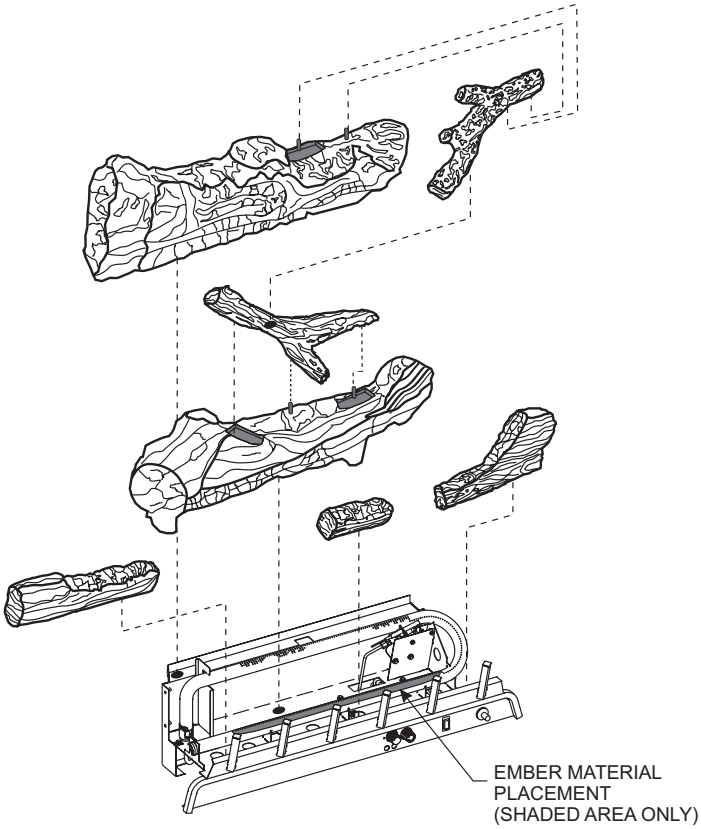

Figure 14

OPERATION INSTRUCTIONS/FLAME APPEARANCE

Flames from the pilot (rear right back side of the pan burner) as well as the main flame should be visually checked as the log set is installed.

In normal operation at full rate, the flame appearance should be sets of yellow flames above the rear burner section, and shorter blue flames with glowing embers on the front burner section.

NOTICE: all flames will be random by design, flame height will go up and down.

Avoid any drafts that alter burner flame patterns. Do not allow fans to blow directly into fireplace. Do not place a blower inside the burner area of the firebox. Ceiling fans may create drafts that alter flame patterns. Sooting and improper burning will result.

During manufacturing, fabricating and shipping, various components of this appliance are treated with certain oils, films or bonding agents. These chemicals are not harmful, but may produce annoying smoke and smells as they are burned off during the initial operation of the appliance, possibly causing headaches or eye or lung irritation. This is a normal and temporary occurrence.

The initial break-in operation should last 2-3 hours with the burner at the highest setting. Provide maximum ventilation by opening windows or doors to allow odors to dissipate. Any odors remaining after this initial break-in will be slight and will disappear with continued use.

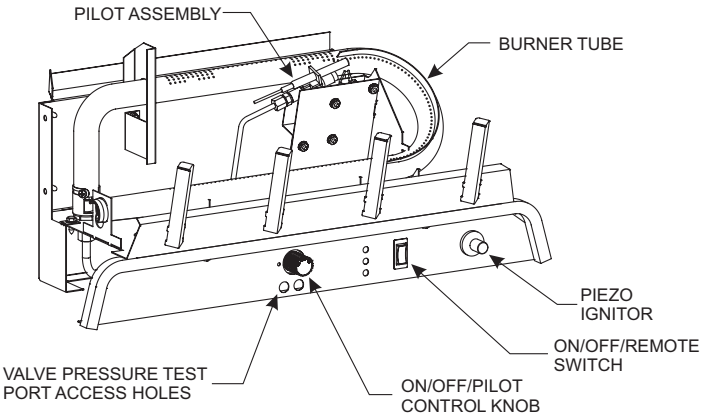

Millivolt Valve for VFDR18LB10 Series
Figure 15

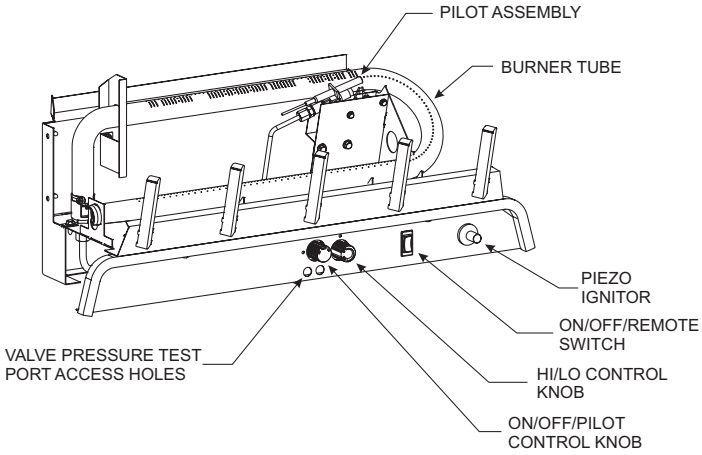

Millivolt Valve for VFDR Series
Figure 16

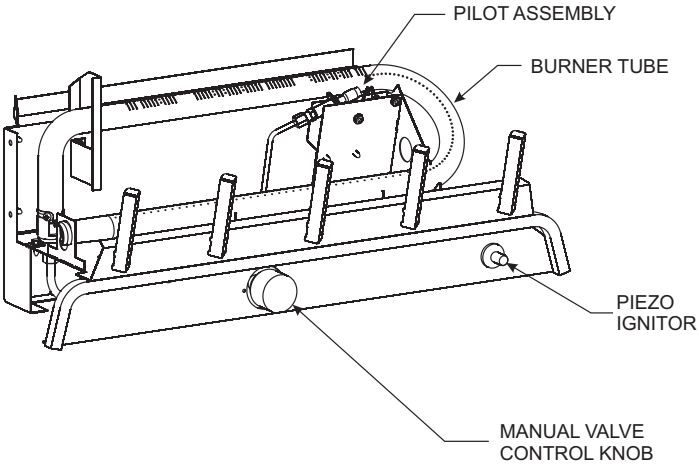

Thermostat Valve for VFDT Series
Figure 17

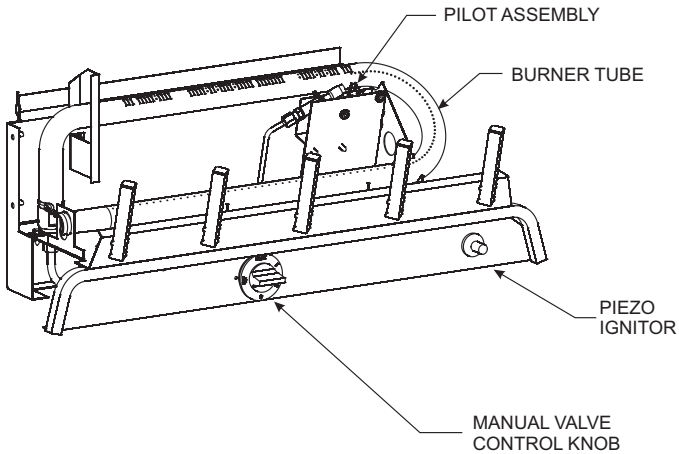

Manual Valve for VFDM Series
Figure 18

WIRING - VFDR MODELS ONLY

Thermostats are not approved on vented decorative appliances.

Label all wires prior to disconnection when servicing controls. Wiring errors can cause improper and dangerous operation. Verify proper operation after servicing.

18", 24" and 30" Gas Logs (Millivolt) thermopile is self powered gas valve and does not require 110 volts. See Figure to provide optional wall switch, thermostat, or remote control. Maximum length of 20 feet of 16 AWG to conductor wires is to be used with all optional switches.

Check System Operation
Millivolt system and all individual components may be checked with a millivolt meter 0-1000 MV range.

Remote Receiver
Use the following steps to place the **remote receiver** adjacent to the gas valve.

Attention:
1. The remote receiver **can not** be placed behind the gas valve and burner assembly.
2. When facing the appliance, the remote receiver must be placed to the **right** of the gas valve and burner assembly.

CAUTION: Do not let remote control receiver come in contact with burner assembly.

On circulating vent-free firebox, install remote control receiver behind bottom louver.

Refer to remote control installation and operating instructions for more details on remote control.

750 Millivolt System
When you ignite the pilot, the thermocouple produces millivolts (electrical current) which energizes the magnet in the gas valve. After 30 seconds to 1 minute time period you can release the gas control knob and the pilot will stay ON. Allow your pilot flame to operate an additional one (1) to two (2) minutes before you turn the gas control knob from the PILOT position to the ON position. This time period allows the millivolts (electrical current) to buildup to a sufficient level allowing the gas control to operate properly.

Millivolt Control
The valve regulator controls the burner pressure which should be checked at the pressure test point. Turn captured screw counter clockwise 2 or 3 turns and then place tubing to pressure gauge over test point (Use test point “A” closest to control knob). After taking pressure reading, be sure and turn captured screw clockwise firmly to re-seal. Do not over torque. Check for gas leaks.

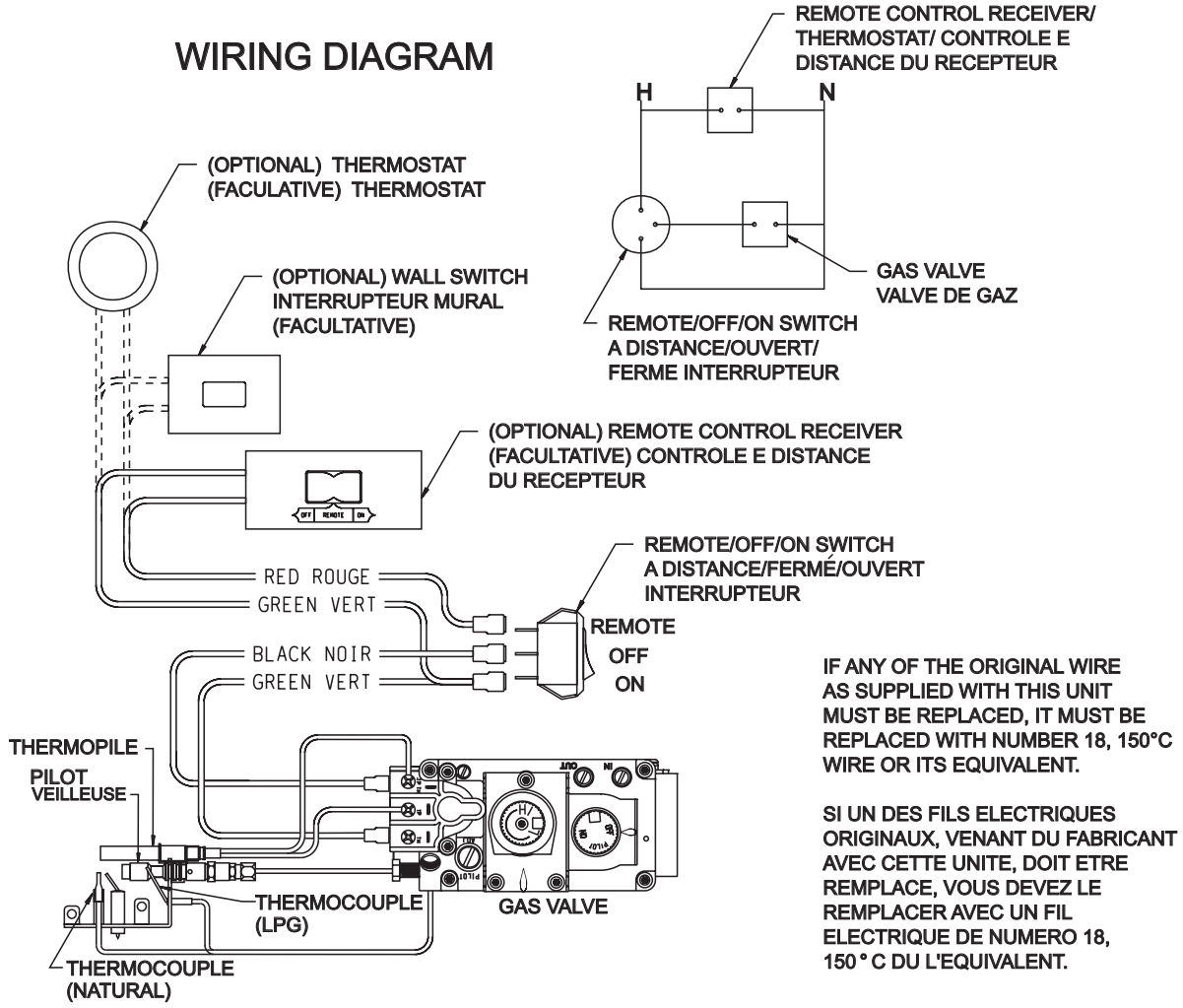

Figure 19

VFDR(18,24,30)LB LIGHTING INSTRUCTIONS

FOR YOUR SAFETY READ BEFORE LIGHTING

⚠ WARNING: If you do not follow these instructions exactly, a fire or explosion may result causing property damage, personal injury or loss of life.

A. This appliance has a pilot which must be lighted by hand. When lighting the pilot, follow these instructions exactly.

B. BEFORE LIGHTING, smell all around the appliance area for gas. Be sure to smell next to the floor because some gas is heavier than air and will settle on the floor.

WHAT TO DO IF YOU SMELL GAS

- **Do not try to light any appliance**
- **Do not touch any electrical switch; Do not use any phone in your building**
- **Immediately call your gas supplier from a neighbor's phone. Follow the gas supplier's instructions.**
- **If you cannot reach your gas supplier, call the fire department.**

C. Use only your hand to push in or turn the gas control knob. Never use tools. If the knob will not push in or turn by hand, don't try to repair it, call a qualified service technician. Force or attempted repair may result in a fire or explosion.

D. Do not use this appliance if any part has been under water. Immediately call a qualified service technician to inspect the appliance and to replace any part of the control system and any gas control which has been under water.

LIGHTING INSTRUCTIONS

1. STOP! Read the safety information above on this page.
2. Open bottom louver assembly (if applicable).
3. Set REMOTE/OFF/ON switch to "OFF".
4. Turn off all electric power to the appliance (if applicable).
5. Push in gas control knob slightly and turn clockwise to "OFF".
   NOTE: Knob cannot be turned from "PILOT" to "OFF" unless knob is pushed in slightly. Do not force.
6. Wait ten (10) minutes to clear out any gas. Then smell for gas, including near the floor. If you smell gas, STOP! Follow "B" in the safety information above. If you do not smell gas, go to the next step.
7. Find pilot - Follow metal tube from gas control. The pilot is located next to the burner, near the right side.

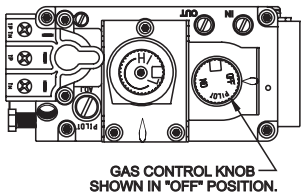

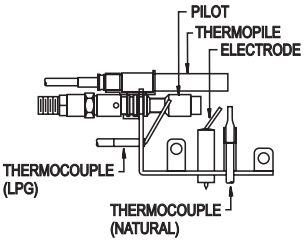

8. Turn gas control knob counterclockwise to "PILOT".
9. Push in control knob all the way and hold in. Repeatedly push the Piezo Ignitor Button until the pilot is lit. Continue to hold the control knob in for about one (1) minute after the pilot is lit. Release knob, and it will pop back up. Pilot should remain lit. If it goes out, repeat steps 5 through 9.
   - If knob does not pop up when released, STOP and IMMEDIATELY call a qualified service technician or gas supplier.
   - If the pilot will not stay lit after several tries, turn the gas control knob to "OFF" and call your service technician or gas supplier.
10. Turn gas control knob counterclockwise to "ON".
11. Set REMOTE/OFF/ON switch to desired setting.
12. Turn on all electric power to the appliance (if applicable).
13. Close bottom louver assembly (if applicable).

TO TURN OFF GAS TO APPLIANCE

1. Open bottom louver assembly (if applicable).
2. Set REMOTE/OFF/ON switch to OFF.
3. Turn off all electric power to the appliance if service is to be performed (if applicable).
4. Push in gas control knob slightly and turn clockwise to "OFF". Do not force.
5. Close bottom louver assembly (if applicable).

VFDR18LB10(N,P) LIGHTING INSTRUCTIONS

FOR YOUR SAFETY READ BEFORE LIGHTING

⚠ WARNING: If you do not follow these instructions exactly, a fire or explosion may result causing property damage, personal injury or loss of life.

A. This appliance has a pilot which must be lighted by hand. When lighting the pilot, follow these instructions exactly.

B. BEFORE LIGHTING, smell all around the appliance area for gas. Be sure to smell next to the floor because some gas is heavier than air and will settle on the floor.

WHAT TO DO IF YOU SMELL GAS

- **Do not try to light any appliance**
- **Do not touch any electrical switch; Do not use any phone in your building**
- **Immediately call your gas supplier from a neighbor's phone. Follow the gas supplier's instructions.**
- **If you cannot reach your gas supplier, call the fire department.**

C. Use only your hand to push in or turn the gas control knob. Never use tools. If the knob will not push in or turn by hand, don't try to repair it, call a qualified service technician. Force or attempted repair may result in a fire or explosion.

D. Do not use this appliance if any part has been under water. Immediately call a qualified service technician to inspect the appliance and to replace any part of the control system and any gas control which has been under water.

LIGHTING INSTRUCTIONS

1. STOP! Read the safety information above on this page.
2. Set REMOTE/OFF/ON switch to "OFF".
3. Turn off all electric power to the appliance (if applicable).
4. Open bottom louver assembly (if applicable).
5. Push in gas control knob slightly and turn clockwise to "OFF". NOTE: Knob cannot be turned from "PILOT" to "OFF" unless knob is pushed in slightly. Do not force.
6. Wait ten (10) minutes to clear out any gas. Then smell for gas, including near the floor. If you smell gas, STOP! Follow "B" in the safety information above. If you do not smell gas, go to the next step.
7. Find pilot - Follow metal tube from gas control. The pilot is located next to the burner, near the right side.

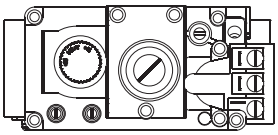

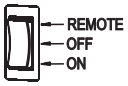

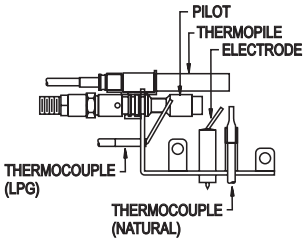

8. Turn gas control knob counterclockwise to "PILOT".
9. Push in control knob all the way and hold in. Repeatedly push the Piezo Ignitor Button until the pilot is lit. Continue to hold the control knob in for about one (1) minute after the pilot is lit. Release knob, and it will pop back up. Pilot should remain lit. If it goes out, repeat steps 5 through 9.
   - If knob does not pop up when released, STOP and IMMEDIATELY call a qualified service technician or gas supplier.
   - If the pilot will not stay lit after several tries, turn the gas control knob to "OFF" and call your service technician or gas supplier.
10. Turn gas control knob counterclockwise to "ON".
11. Close bottom louver assembly (if applicable).
12. Turn on all electric power to the appliance (if applicable).
13. Set REMOTE/OFF/ON switch to desired setting.

TO TURN OFF GAS TO APPLIANCE

1. Set REMOTE/OFF/ON switch to OFF.
2. Turn off all electric power to the appliance if service is to be performed (if applicable).
3. Open bottom louver assembly (if applicable).
4. Push in gas control knob slightly and turn clockwise to "OFF". Do not force.
5. Close bottom louver assembly (if applicable).

VFDT(18,24,30)LB LIGHTING INSTRUCTIONS

FOR YOUR SAFETY READ BEFORE LIGHTING

⚠ WARNING: If you do not follow these instructions exactly, a fire or explosion may result causing property damage, personal injury or loss of life.

A. This appliance has a pilot which must be lighted by hand. When lighting the pilot, follow these instructions exactly.

B. BEFORE LIGHTING, smell all around the appliance area for gas. Be sure to smell next to the floor because some gas is heavier than air and will settle on the floor.

WHAT TO DO IF YOU SMELL GAS

- **Do not try to light any appliance**
- **Do not touch any electrical switch; Do not use any phone in your building**
- **Immediately call your gas supplier from a neighbor's phone. Follow the gas supplier's instructions.**
- **If you cannot reach your gas supplier, call the fire department.**

C. Use only your hand to push in or turn the gas control knob. Never use tools. If the knob will not push in or turn by hand, don't try to repair it, call a qualified service technician. Force or attempted repair may result in a fire or explosion.

D. Do not use this appliance if any part has been under water. Immediately call a qualified service technician to inspect the appliance and to replace any part of the control system and any gas control which has been under water.

LIGHTING INSTRUCTIONS

1. STOP! Read the safety information above on this page.
2. Set thermostat (gas control knob) to lowest setting.
3. Turn off all electric power to the appliance (if applicable).
4. Push in gas control knob slightly and turn clockwise to "OFF." Do not force.

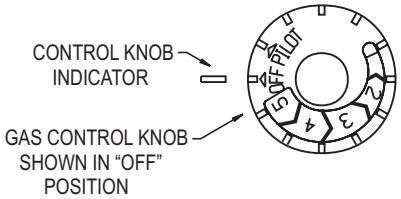

5. Wait ten (10) minutes to clear out any gas. Then smell for gas, including near the floor. If you smell gas, STOP! Follow "B" in the safety information above. If you do not smell gas, go to the next step.
6. Find pilot - the pilot is located in front of the rear log.
7. Turn manual gas control knob counterclockwise to "PILOT."

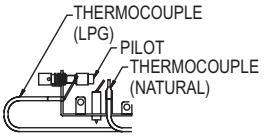

8. Push in manual gas control knob all the way and hold in. Repeatedly push the piezo ignitor button until pilot is lit (or use a match to light). Continue to hold the control knob in for about one (1) minute after the pilot is lit. Release knob and it will pop back up. Pilot should remain lit. If it goes out, repeat steps 4 though 8.
   - If knob does not pop up when released, stop and immediately call your service technician or gas supplier
   - If the pilot will not stay lit after several tries, turn the gas control knob to "OFF" and call your service technician or gas supplier.
9. Attention! Gas control has an INTERLOCK latching device. When the pilot is initially lit and the safety magnet is energized (pilot stays "ON"), the INTERLOCK latching device becomes operative. If the gas control is turned to the "OFF" position or gas flow to the appliance is shut off, the pilot cannot be relighted until the safety magnet is de-energized (approximately 60 seconds). There will be an audible "click" when the safety magnet in the gas control is de-energized. Pilot can now be relighted. Repeat steps 4 through 8.
10. Turn gas control knob counterclockwise to "HIGH."
11. Turn on all electric power to the appliance (if applicable).
12. Set thermostat (gas control knob) to desired setting from "HIGH" to "LOW."

TO TURN OFF GAS TO APPLIANCE

1. Set thermostat (gas control knob) to lowest setting.
2. Turn off all electric power to the appliance if service is to be performed (if applicable).
3. Push in gas control knob slightly and turn clockwise to "OFF." Do not force.

VFDM(18,24,30)LB LIGHTING INSTRUCTIONS

FOR YOUR SAFETY READ BEFORE LIGHTING

⚠ WARNING: If you do not follow these instructions exactly, a fire or explosion may result causing property damage, personal injury or loss of life.

A. This appliance has a pilot which must be lighted by hand. When lighting the pilot, follow these instructions exactly.

B. BEFORE LIGHTING, smell all around the appliance area for gas. Be sure to smell next to the floor because some gas is heavier than air and will settle on the floor.

WHAT TO DO IF YOU SMELL GAS

- **Do not try to light any appliance**
- **Do not touch any electrical switch; Do not use any phone in your building**
- **Immediately call your gas supplier from a neighbor's phone. Follow the gas supplier's instructions.**
- **If you cannot reach your gas supplier, call the fire department.**

C. Use only your hand to push in or turn the gas control knob. Never use tools. If the knob will not push in or turn by hand, don't try to repair it, call a qualified service technician. Force or attempted repair may result in a fire or explosion.

D. Do not use this appliance if any part has been under water. Immediately call a qualified service technician to inspect the appliance and to replace any part of the control system and any gas control which has been under water.

LIGHTING INSTRUCTIONS

1. STOP! Read the safety information above on this page.
2. Push in gas control knob slightly and turn clockwise to "OFF." Do not force.

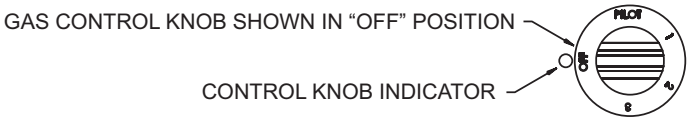

3. Wait ten (10) minutes to clear out any gas. Then smell for gas, including near the floor. If you smell gas, STOP! Follow "B" in the safety information above. If you do not smell gas, go to the next step.
4. Find pilot - the pilot is located in front of the rear log.
5. Turn manual gas control knob counterclockwise to "PILOT."

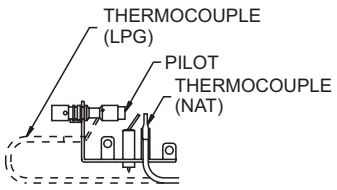

6. Push in manual gas control knob all the way and hold in. Repeatedly push the piezo ignitor button until pilot is lit (or use a match to light). Continue to hold the control knob in for about one (1) minute after the pilot is lit. Release knob and it will pop back up. Pilot should remain lit. If it goes out, repeat steps 2 through 6.
   - If knob does not pop up when released, stop and immediately call your service technician or gas supplier
   - If the pilot will not stay lit after several tries, turn the gas control knob to "OFF" and call your service technician or gas supplier.
7. Three heat settings can be selected by slightly depressing the manual gas control knob and turning the manual gas control knob counterclockwise to 1, 2 or 3.
8. CAUTION! When the manual gas control knob has been turned to desired heat setting, ensure that the manual gas control knob is locked into that heat setting and cannot be turned without being depressed. If the manual gas control knob is in mid-position, between heat settings, incomplete combustion will take place, causing odor and may produce gas leakage or carbon monoxide.

TO TURN OFF GAS TO APPLIANCE

1. Push in gas control knob slightly and turn clockwise to "OFF." Do not force.

PILOT FLAME CHARACTERISTICS

Figures 20 and 21 show a correct pilot flame pattern. The correct flame will be blue and will extend beyond the thermocouple. The flame will surround the thermocouple just below the tip. A slight yellow flame may occur where the pilot flame and main burner flame meet. Figures 22 and 23 show an incorrect pilot flame pattern. The incorrect pilot flame is not touching the thermocouple. This will cause the thermocouple to cool. When the thermocouple cools, the heater will shut down.

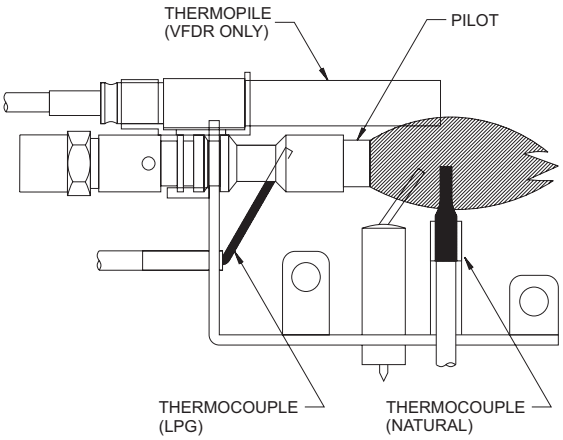

Correct Pilot Flame Pattern for VFDR
Figure 20

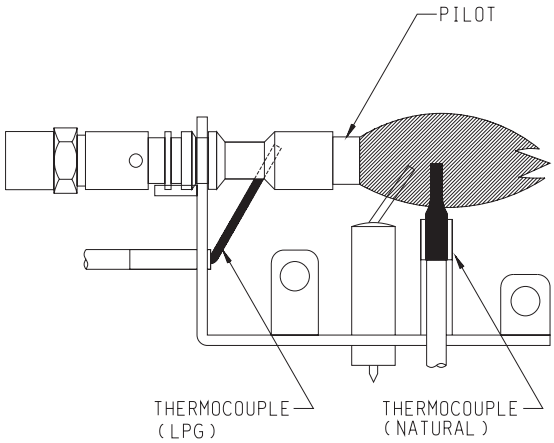

Correct Pilot Flame Pattern for VFDT & VFDM

Figure 21

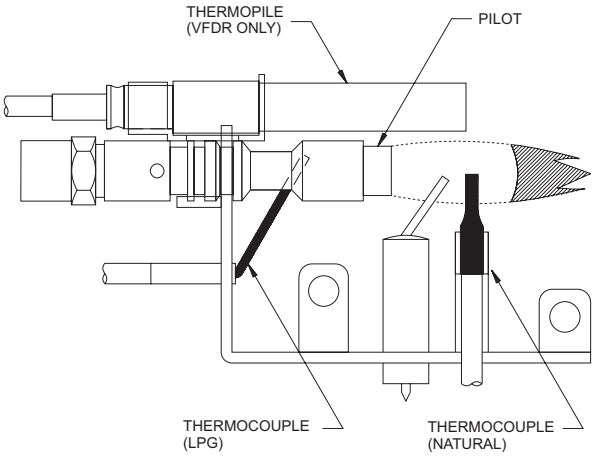

Incorrect Pilot Flame Pattern for VFDR
Figure 22

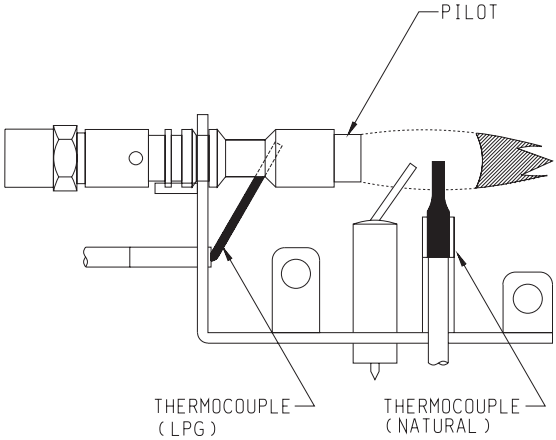

Incorrect Flame Pattern for VFDT & VFDM
Figure 23

If pilot flame pattern is incorrect, as shown in Figures 22 and 23

- See Troubleshooting, page 24.

CLEANING AND SERVICING

Annual inspection and cleaning by your dealer or qualified service technician is recommended to prevent malfunction and/or sooting.

TURN OFF HEATER AND ALLOW TO COOL BEFORE CLEANING.
Remove logs, handling carefully by holding gently at each end. Gloves are recommended to prevent skin irritation from ceramic fibers. If skin becomes irritated, wash gently with soap and water. Refer to manual for correct log placement.

PERIODIC CLEANING – Refer to parts diagram for location of items discussed below.

- Do not use cleaning fluid to clean logs or any part of heater.
- Logs - brush with soft bristle brush or vacuum with brush attachment.
- Remove loose particles and dust from the burner, controls and grate.
- Inspect and clean burner air intake hole. Remove lint or particles with brush. Failure to keep air intake hole clean will result in sooting and poor combustion.

ANNUAL CLEANING/INSPECTION – Refer to parts diagram for location of items discussed below.

- Inspect and clean burner air intake hole. Remove lint or particles with vacuum or brush. Failure to keep air intake hole clean will result in sooting and poor combustion.
- Inspect and clean all burner ports.
- Inspect ODS pilot for operation and accumulation of lint at air intake holes.
- Verify flame pattern and log placement for proper operation.
- Verify smooth and responsive ignition of main burner.

Cleaning and Maintenance/Pilot

Oxygen Depletion Sensor Pilot (Figures 24 and 25)
When the pilot has a large yellow tip flame, clean the Oxygen Depletion Sensor as follows:

1. Clean the ODS pilot by loosening nut B from the pilot tubing. When this procedure is required, grasp nut A with an open end wrench.
2. Blow air pressure through the holes indicated by the arrows. This will blow out foreign materials such as dust, lint and spider webs. Tighten nut B also by grasping nut A.

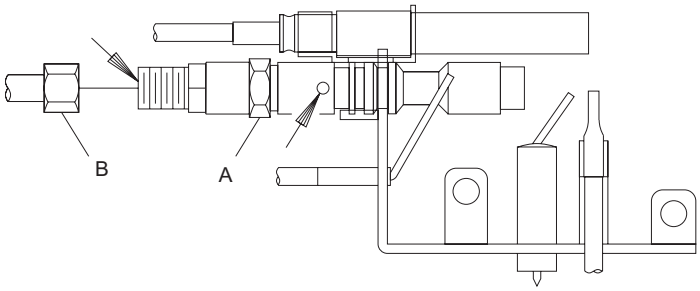

Figure 24 VFDR

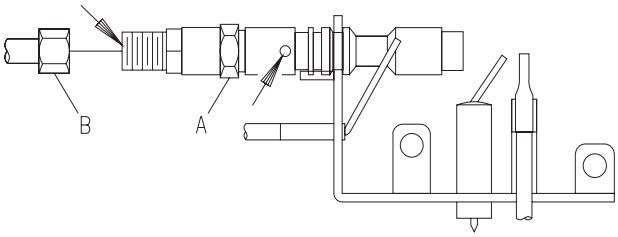

Figure 25 VFDT & VFDM

TROUBLESHOOTING
SYMPTOMS, POSSIBLE CAUSES AND CORRECTIONS

1. **When ignitor button is pressed, there is no spark at ODS/pilot.**
   a. Ignitor electrode positioned wrong - Replace pilot.
   b. Ignitor electrode is broken - Replace pilot.
   c. Ignitor electrode not connected to ignitor cable - Reconnect ignitor cable.
   d. Ignitor cable pinched or wet. Keep ignitor cable dry - Free ignitor cable if pinched by any metal or tubing.
   e. Broken ignitor cable - Replace ignitor cable.
   f. Bad piezo ignitor - Replace piezo ignitor.
2. **Appliance produces unwanted odors.**
   a. Appliance burning vapors from paint, hair spray, glues, etc. - Ventilate room. Stop using odor causing products while heater is running.
   b. Gas leak - Locate and correct all leaks.
3. **Appliance shuts off during use. (Pilot and main burner are off.)**
   a. Not enough fresh air is available for ODS/pilot to operate - Open window and/or door for ventilation.
   b. Low line pressure - Contact local gas company.
   c. ODS/pilot is partially clogged - Clean ODS/pilot.
   d. Defective thermocouple - Replace pilot.
4. **Appliance shuts off during use. (Pilot stays on.)**
   a. Low line pressure - Check line pressure to the valve.
   b. Defective thermopile - Check pilot flame, check wire connections, output should be a minimum of 325 millivolts across. TH/TP and TP terminals with REMOTE/OFF/ON switch off.
5. **Gas odor even when control knob is in OFF position.**
   a. Gas leak - Locate and correct all leaks.
   b. Control valve defective - Replace control valve.
6. **When ignitor button is pressed, there is spark at ODS/pilot, but no ignition.**
   a. Gas supply turned off or manual shutoff valve closed - Turn on gas supply or open manual shutoff valve.
   b. Control knob not in PILOT position - Turn control knob to PILOT position.
   c. Control knob not pressed in while in PILOT position - Press in control knob while in PILOT position.
   d. Air in gas lines when installed - Continue holding down control knob. Repeat igniting operation until air is removed.
   e. ODS/pilot is clogged - Replace ODS/pilot assembly or get it serviced.
   f. Gas regulator setting is not correct - Replace gas regulator.
7. **ODS/pilot lights but flame goes out when control knob is released.**
   a. Control knob not fully pressed in - Press in control knob fully.
   b. Control knob not pressed in long enough - After ODS/pilot lights, keep control knob pressed in 30 seconds.
   c. Manual Shutoff valve not fully open - Fully open manual shutoff valve.
   d. Thermocouple connection loose at control valve - Hand tighten until snug, then tighten 1/4 turn more.
   e. Pilot flame not touching thermocouple, which allows thermocouple to cool, causing pilot flame to go out.
   This problem could be caused by either low gas pressure or dirty or partially clogged ODS/pilot - Contact local gas company.
   f. Thermocouple damaged - Replace thermocouple.
   g. Control valve damaged - Replace control valve.
8. **Burner does not light after ODS/pilot is lit.**
   a. Burner orifice clogged - Clean burner or replace main burner orifice.
   b. Burner orifice diameter is too small - Replace burner orifice.
   c. Inlet gas pressure is too low - Contact qualified service person.
9. **If burning at main burner orifice occurs (a loud, roaring blow torch noise).**
   a. You must turn off burner assembly and contact a qualified service person.
   b. Manifold pressure is too low - Contact local gas company.
   c. Burner orifice clogged - Clean burner or replace burner orifice.
10. **Logs appear to smoke after initial operation.**
    a. Vapors from paint or curing process of logs - Problem will stop after a few hours of operation. Run the heater with the damper open if you have one, or open a window for the first few hours.
    Log heater is intended to be smokeless. Turn OFF heater and call qualified service person.
11. **Heater produces a whistling noise when main burner is lit.**
    a. Turning control knob to HIGH position when main burner is cold - Turn control knob to LOW position and let warm up for a minute (does not apply to VFDR18LB10 models)
    b. Air in gas line - Operate burner until air is removed from line. Have gas line checked by local gas company.
    c. Dirty or partially clogged burner orifice - Clean burner or replace burner orifice.
12. **No gas to pilot (VFDM and VFDT models only).**
    a. LP-regulator shut down due to inlet pressure too high - Verify LP tank regulator is installed and set at 11" to 13" w.c. Replace regulator on heater.

If the gas quality is bad, your pilot may not stay lit, the burners may produce soot and the heater may backfire when lit. If the gas quality or pressure is low, contact your local gas supplier immediately.

MASTER PARTS DISTRIBUTOR LIST

To Order Parts Under Warranty, please contact your local Empire dealer. See the dealer locator at www.empirecomfort.com. To provide warranty service, your dealer will need your name and address, purchase date and serial number, and the nature of the problem with the unit.

To Order Parts After the Warranty Period, please contact your dealer or one of the Master Parts Distributors listed below. This list changes from time to time. For the current list, please click on the Master Parts button at www.empirecomfort.com. Please note: Master Parts Distributors are independent businesses that stock the most commonly ordered Original Equipment repair parts for Heaters, Grills, and Fireplaces manufactured by Empire Comfort Systems Inc.

Dey Distributing
1401 Willow Lake Boulevard
Vadnais Heights, MN 55101

Phone: 651-490-9191
Toll Free: 800-397-1339
Website: www.deydistributing.com
Parts: Heater, Hearth and Grills

F. W. Webb Company
200 Locust Street
Hartford, CT 06114

Phone: 860-722-2433
Toll Free: 800-243-9360
Fax: 860-293-0479
Toll Free Fax: 800-274-2004
Websites: www.fwwebb.com & www.victormfg.com
Parts: Heater, Hearth and Grills

East Coast Energy Products
10 East Route 36
West Long Branch, NJ 07764

Phone: 732-870-8809
Toll Free: 800-755-8809
Fax: 732-870-8811
Website: www.eastcoastenergy.com
Parts: Heater, Hearth and Grills

HOW TO ORDER REPAIR PARTS

Parts Not Under Warranty

Parts can be ordered through your Service Person, Dealer, or a Master Parts Distributor. See this page for the Master Parts Distributors list. For best results, the **service person or dealer** should order parts through the distributor. Parts can be shipped directly to the **service person/dealer**.

Warranty Parts

Warranty parts will need a proof of purchase and can be ordered by your Service Person or Dealer. Proof of purchase is **required** for warranty parts.

All parts listed in the Parts List have a Part Number. When ordering parts, first obtain the Model Number and Serial Number from the name plate on your equipment. Then determine the Part Number (**not** the Index Number) and the Description of each part from the following illustration and part list. Be sure to give all this information . . .

Appliance Model Number _____ Part Description _____

Appliance Serial Number _____ Part Number _____

Type of Gas (Propane or Natural) _____

Do not order bolts, screws, washers or nuts. They are standard hardware items and can be purchased at any local hardware store.

Shipments contingent upon strikes, fires and all causes beyond our control.

VFDR SERIES PARTS LIST

Attention: When ordering parts, it is very important that part number and description of part coincide.

INDEX NO.	PART NUMBERS VFDR18LB	VFDR24LB	VFDR30LB	DESCRIPTION
1	21588	21588	23157	PILOT SHIELD (NAT ONLY)
2	R3623	R3623	R3623	PILOT ASSEMBLY (LPG)
2	R3624	R3624	R3624	PILOT ASSEMBLY (NAT)
3	21590	21590	21590	PILOT BRACKET (LPG)
3	23106	23106	23106	PILOT BRACKET (NAT)
4	R9022	R9023	R9024	BURNER, TUBE
5	21592	21592	21260	BRACKET, LOG LOCATOR
6	R7624	R7624	R7624	AIR SHUTTER
7	R7572	R7572	R7572	JAMB NUT
8	21669	21670	21671	BURNER BASE SUB-ASSEMBLY
9	21581	21581	21581	LEG, REAR (2 REQUIRED)
10	P285	P244	P296	ORIFICE (NAT)
10	P258	P210	P297	ORIFICE (LPG)
11	P212	P212	P212	ORIFICE HOLDER
12	21561	21561	21561	TUBING ASSEMBLY (VALVE TO PILOT - LPG)
12	21559	21559	21559	TUBING ASSEMBLY (REGULATOR TO PILOT - NAT)
13	R7063	R7063	R7063	REGULATOR, NAT PILOT
14	21560	21560	21560	TUBING ASSEMBLY (VALVE TO REGULATOR - NAT ONLY)
15	21562	21563	21564	TUBING ASSEMBLY
16	R2423	R2423	R2423	CONNECTOR, MALE
18	R3626	R3626	R3626	VALVE (NAT)
18	R3625	R3625	R3625	VALVE (LPG)
19	R9028	R9028	R9028	KNOB, EXTENSION ON/OFF
20	R9027	R9027	R9027	KNOB, EXTENSION HI/LO
21	33462	33464	33466	COVER PLATE, FRONT
22	21578	21579	21580	LEG, FRONT
23	R2313	R2313	R2313	IGNITOR, PIEZO
24	R3436	R3436	R3436	SWITCH, REMOTE/OFF/ON
25	R5668	R5668	R5668	IGNITER WIRE
26	R10947	R10947	R10947	WIRE ASSEMBLY (REMOTE/OFF/ON)
27	R7587	R7556	R7598	REAR LOG
28	R7586	R7555	R7597	MIDDLE LOG
29	R7585	R7553	R7553	FRONT LOG, LEFT
30	R7554	R7554	R7554	FRONT LOG, RIGHT
31	-	-	R7601	FRONT LOG, MIDDLE
32	R7588	R7557	R7599	FRONT TWIG
33	-	-	R7600	REAR TWIG
N/S	15998	15998	-	ROCKWOOL (EMBER MATERIAL) (2REQUIRED)
N/S	-	-	15999	ROCKWOOL (EMBER MATERIAL)

USE ONLY MANUFACTURER'S REPLACEMENT PARTS. USE OF ANY OTHER PARTS COULD CAUSE INJURY OR DEATH.

VFDR SERIES PARTS VIEW

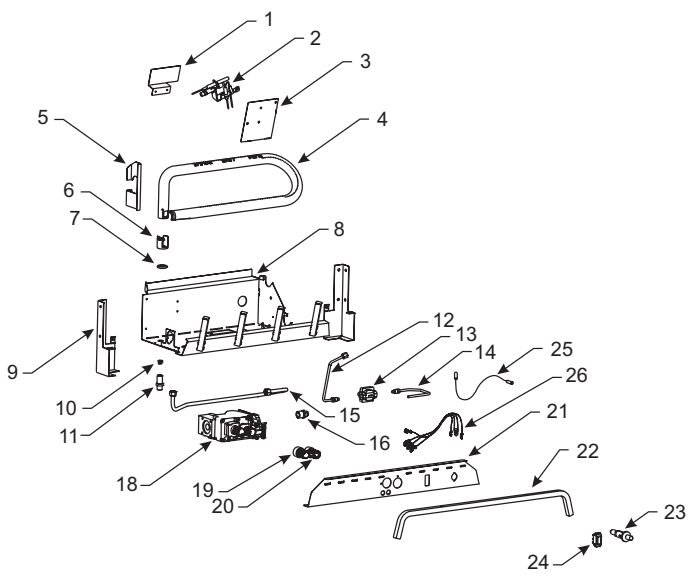

18” BURNER

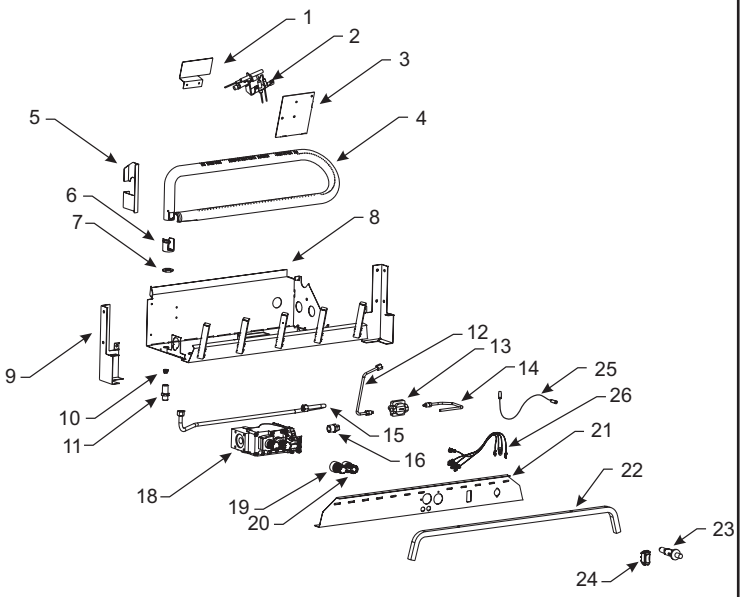

24” BURNER

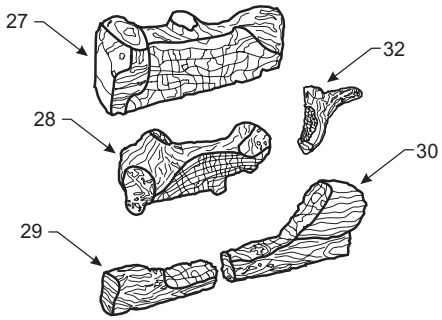

5 PIECE LOG SET

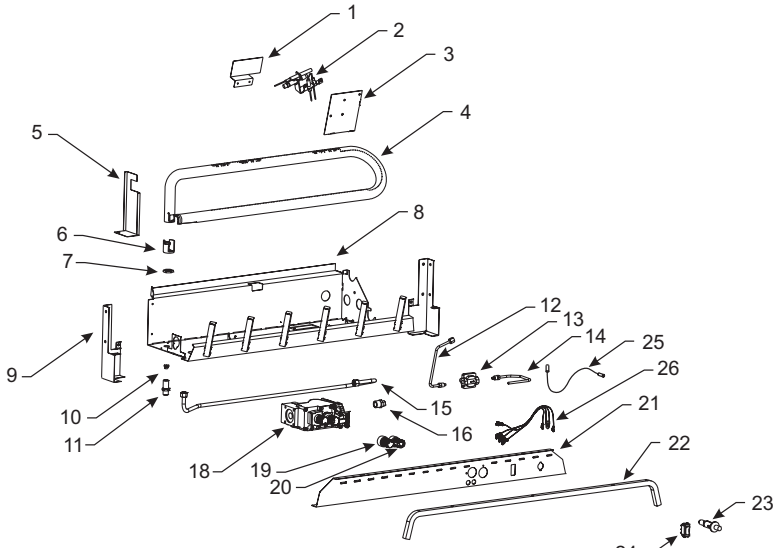

30” BURNER

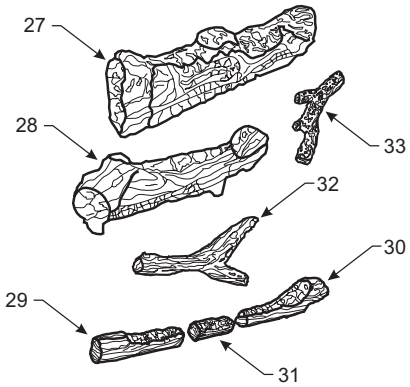

7 PIECE LOG SET

VFDR18LB10 PARTS LIST

Attention: When ordering parts, it is very important that part number and description of part coincide.

INDEX NO.	PART NO.	DESCRIPTION
1	21588	PILOT SHIELD (NAT ONLY)
2	R3623	PILOT ASSEMBLY (LPG)
2	R3624	PILOT ASSEMBLY (NAT)
3	21590	PILOT BRACKET (LPG)
3	23106	PILOT BRACKET (NAT)
4	27426	BURNER, TUBE
5	21592	BRACKET, LOG LOCATOR
6	R7624	AIR SHUTTER
7	R7572	JAMB NUT
8	21669	BURNER BASE SUB-ASSEMBLY
9	21581	LEG, REAR (2 REQUIRED)
10	P214	ORIFICE (NAT)
10	P193	ORIFICE (LPG)
11	P212	ORIFICE HOLDER
12	21561	TUBING ASSEMBLY (VALVE TO PILOT - LPG)
13	21562	TUBING ASSEMBLY
14	R2423	CONNECTOR, MALE
16	R9368	VALVE (NAT)
16	R9369	VALVE (LPG)
17	R9028	KNOB, EXTENSION ON/OFF
18	33462	COVER PLATE, FRONT
19	21578	LEG, FRONT
20	R2313	IGNITOR, PIEZO
21	R3436	SWITCH, REMOTE/OFF/ON
22	R5668	IGNITER WIRE
23	R10947	WIRE ASSEMBLY (REMOTE/OFF/ON)
24	R7587	REAR LOG
25	R7586	MIDDLE LOG
26	R7585	FRONT LOG, LEFT
27	R7554	FRONT LOG, RIGHT
28	R7588	FRONT TWIG (OPTIONAL)
N/S	15998	ROCKWOOL (EMBER MATERIAL) (2REQUIRED)

USE ONLY MANUFACTURER'S REPLACEMENT PARTS. USE OF ANY OTHER PARTS COULD CAUSE INJURY OR DEATH.

VFDR18LB10 PARTS VIEW

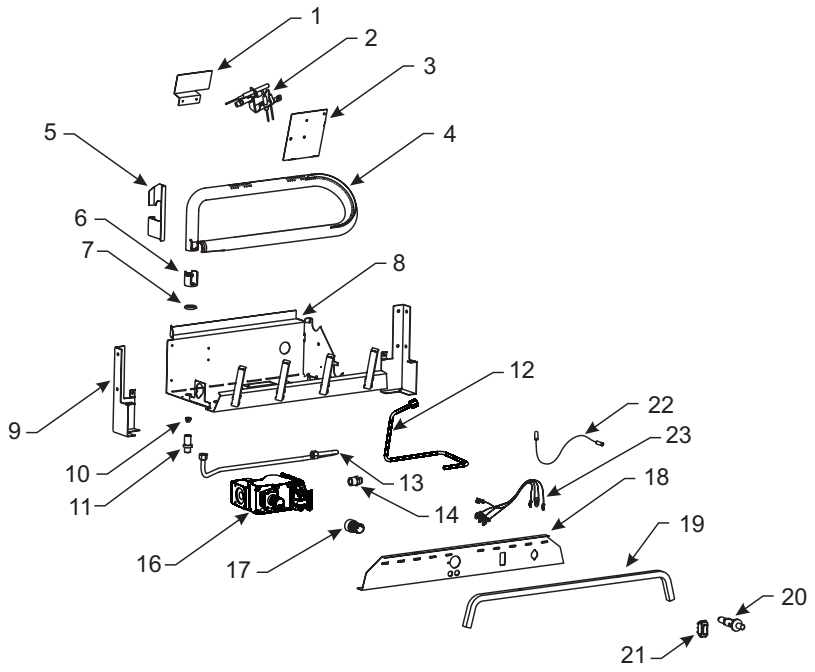

18” BURNER

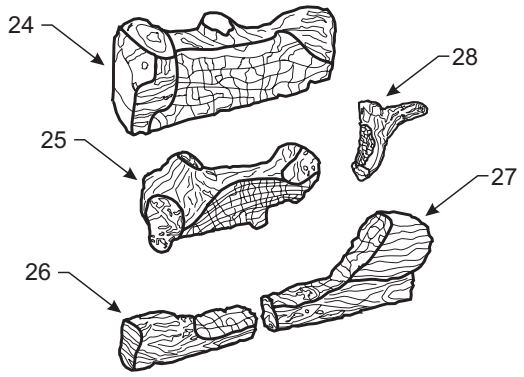

5 PIECE LOG SET

VFDT SERIES PARTS LIST

Attention: When ordering parts, it is very important that part number and description of part coincide.

INDEX NO.	PARTS NUMBERS			DESCRIPTION
	VFDT18LB	VFDT24LB	VFDT30LB	
1	21588	21588	23157	PILOT SHIELD (NAT ONLY)
2	R5170	R5170	R5170	PILOT ASSEMBLY (LPG)
2	R5171	R5171	R5171	PILOT ASSEMBLY (NAT)
3	21590	21590	21590	PILOT BRACKET (LPG)
3	23106	23106	23106	PILOT BRACKET (NAT)
4	R9022	R9023	R9024	BURNER, TUBE
5	21592	21592	21260	BRACKET, LOG LOCATOR
6	R7624	R7624	R7624	AIR SHUTTER
7	R7572	R7572	R7572	JAMB NUT
8	21669	21670	21671	BURNER BASE SUB-ASSEMBLY
9	21581	21581	21581	LEG, REAR (2 REQUIRED)
10	P181	P257	P184	ORIFICE (NAT)
10	P258	P298	P300	ORIFICE (LPG)
11	P212	P212	P212	ORIFICE HOLDER
12	22633	22633	22633	TUBING ASSEMBLY (VALVE TO PILOT)
13	R2479	R2479	R2479	REGULATOR, NAT
13	R2480	R2480	R2480	REGULATOR, LP
14	22744	22744	22744	TUBING ASSEMBLY (VALVE TO REGULATOR - NAT ONLY)
15	22639	22640	22641	TUBING ASSEMBLY
16	R2423	R2423	R2423	CONNECTOR, MALE
17	22632	22632	22632	VALVE BRACKET
18	23334	23336	23338	VALVE (NAT)
18	23335	23337	23339	VALVE (LPG)
21	33463	33465	33467	COVER PLATE, FRONT
22	21578	21579	21580	LEG, FRONT
23	R2313	R2313	R2313	IGNITOR, PIEZO
25	R5668	R5668	R5668	IGNITER WIRE
27	R7587	R7556	R7598	REAR LOG
28	R7586	R7555	R7597	MIDDLE LOG
29	R7585	R7553	R7553	FRONT LOG, LEFT
30	R7554	R7554	R7554	FRONT LOG, RIGHT
31	--	--	R7601	FRONT LOG, MIDDLE
32	R7588	R7557	R7599	FRONT TWIG
33	--	--	R7600	REAR TWIG
N/S	15998	15998	--	ROCKWOOL (EMBER MATERIAL) (2REQUIRED)
N/S	--	--	15999	ROCKWOOL (EMBER MATERIAL)
N/S	R7063	R7063	R7063	PILOT REGULATOR-L

USE ONLY MANUFACTURER'S REPLACEMENT PARTS. USE OF ANY OTHER PARTS COULD CAUSE INJURY OR DEATH.

VFDT SERIES PARTS VIEW

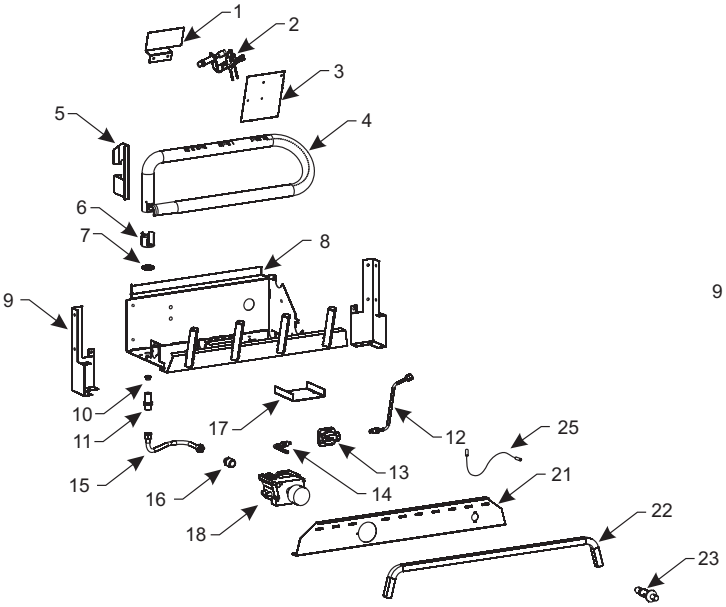

18” BURNER

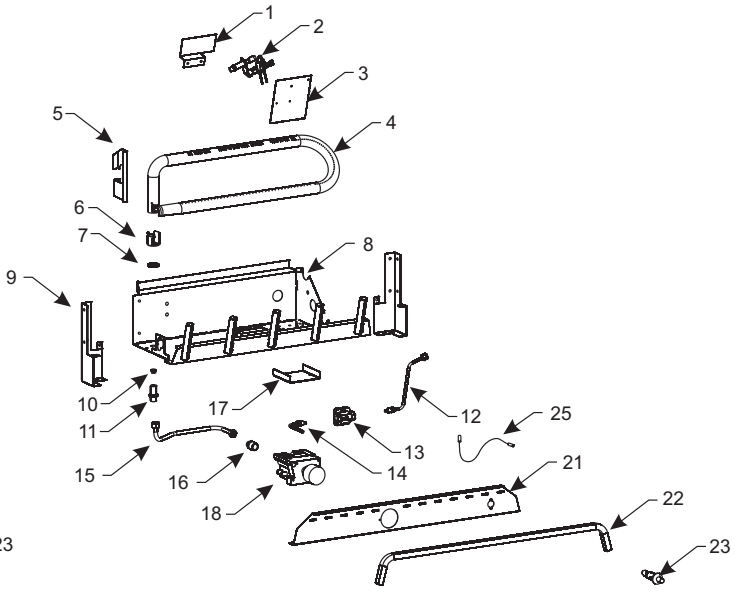

24” BURNER

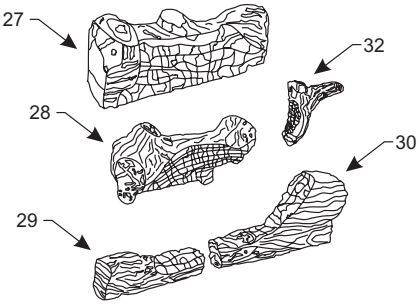

5 PIECE LOG SET

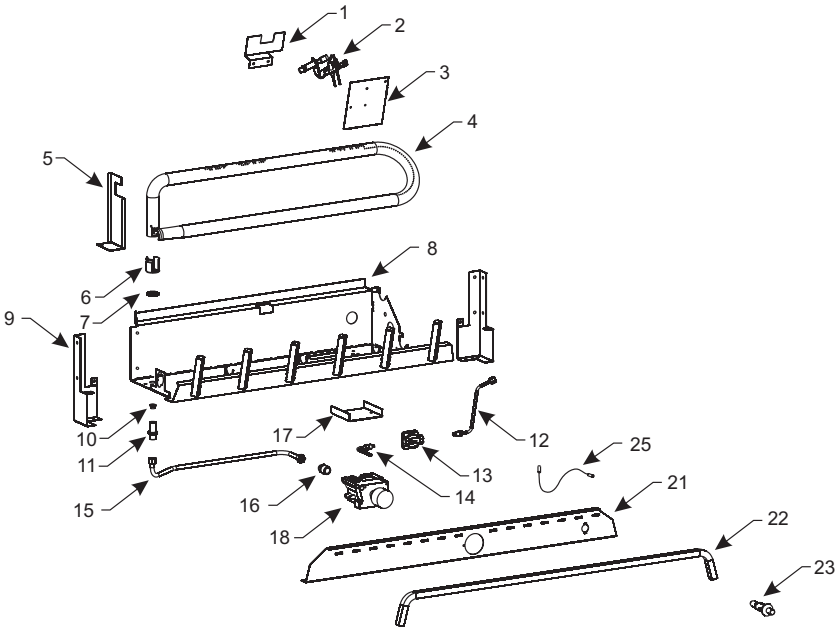

30” BURNER

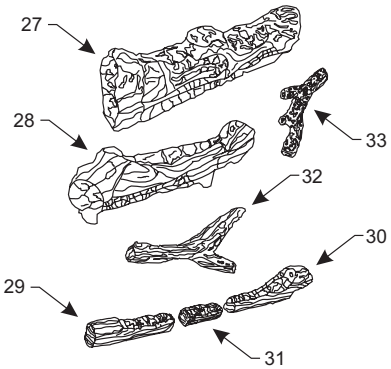

7 PIECE LOG SET

VFDM SERIES PARTS LIST

Attention: When ordering parts, it is very important that part number and description of part coincide.

INDEX NO.	PART NUMBERS VFDM18LB	VFDM24LB	VFDM30LB	DESCRIPTION
1	21588	21588	23157	PILOT SHIELD (NAT ONLY)
2	R5170	R5170	R5170	PILOT ASSEMBLY (LPG)
2	R5171	R5171	R5171	PILOT ASSEMBLY (NAT)
3	21590	21590	21590	PILOT BRACKET (LPG)
3	23106	23106	23106	PILOT BRACKET (NAT)
4	R9022	R9023	R9024	BURNER, TUBE
5	21592	21592	21260	BRACKET, LOG LOCATOR
6	R7624	R7624	R7624	AIR SHUTTER
7	R7572	R7572	R7572	JAMB NUT
8	21669	21670	21671	BURNER BASE SUB-ASSEMBLY
9	21581	21581	21581	LEG, REAR (2 REQUIRED)
10	P181	P243	P296	ORIFICE (NAT)
10	P258	P298	P299	ORIFICE (LPG)
11	P212	P212	P212	ORIFICE HOLDER
12	23109	23109	23109	TUBING ASSEMBLY (VALVE TO PILOT - NAT)
12	23110	23110	23110	TUBING ASSEMBLY (VALVE TO PILOT - LPG)
13	R2479	R2479	R2479	REGULATOR, NAT
13	R2480	R2480	R2480	REGULATOR, LPG
14	23107	23107	23107	TUBING ASSEMBLY (VALVE TO REGULATOR)
15	23111	23112	23113	TUBING ASSEMBLY
17	23108	23108	23108	VALVE BRACKET
18	R9241	R9270	R9244	VALVE (NAT)
18	R9242	R9243	R9245	VALVE (LPG)
21	22636	22637	22638	COVER PLATE, FRONT
22	21578	21579	21580	LEG, FRONT
23	R2313	R2313	R2313	IGNITOR, PIEZO
25	R5668	R5668	R5668	IGNITER WIRE
27	R7587	R7556	R7598	REAR LOG
28	R7586	R7555	R7597	MIDDLE LOG
29	R7585	R7553	R7553	FRONT LOG, LEFT
30	R7554	R7554	R7554	FRONT LOG, RIGHT
31	--	--	R7601	FRONT LOG, MIDDLE
32	R7588	R7557	R7599	FRONT TWIG
33	--	--	R7600	REAR TWIG
34	R1652	R1652	R1652	LOCK NUT
35	R9277	R9277	R9277	KNOB, MANUAL VALVE
N/S	15998	15998	--	ROCKWOOL (EMBER MATERIAL) (2REQUIRED)
N/S	--	--	15999	ROCKWOOL (EMBER MATERIAL)

USE ONLY MANUFACTURER'S REPLACEMENT PARTS. USE OF ANY OTHER PARTS COULD CAUSE INJURY OR DEATH.

VFDM SERIES PARTS VIEW

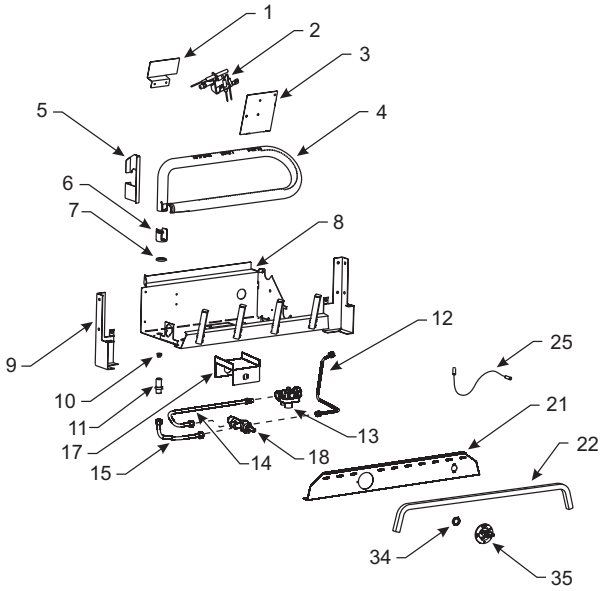

18” BURNER

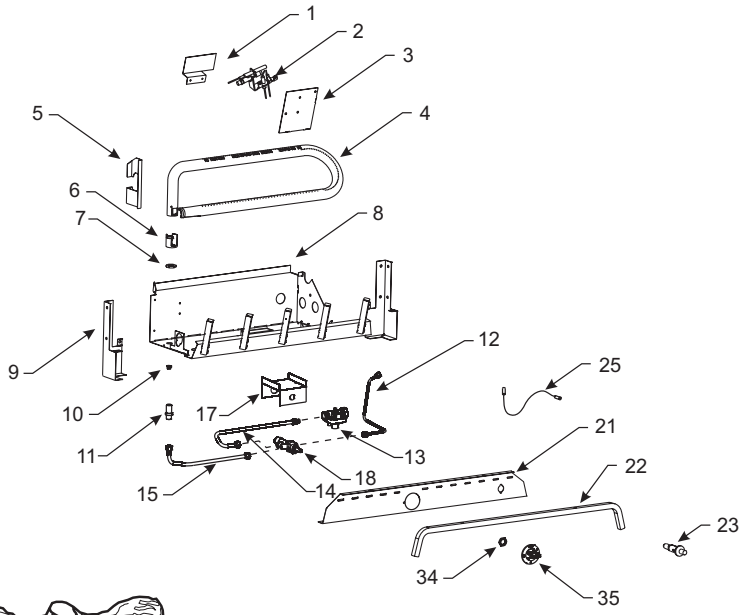

24” BURNER

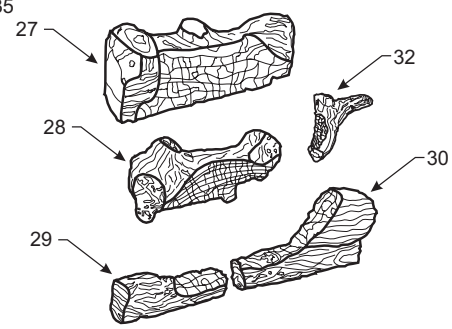

5 PIECE LOG SET

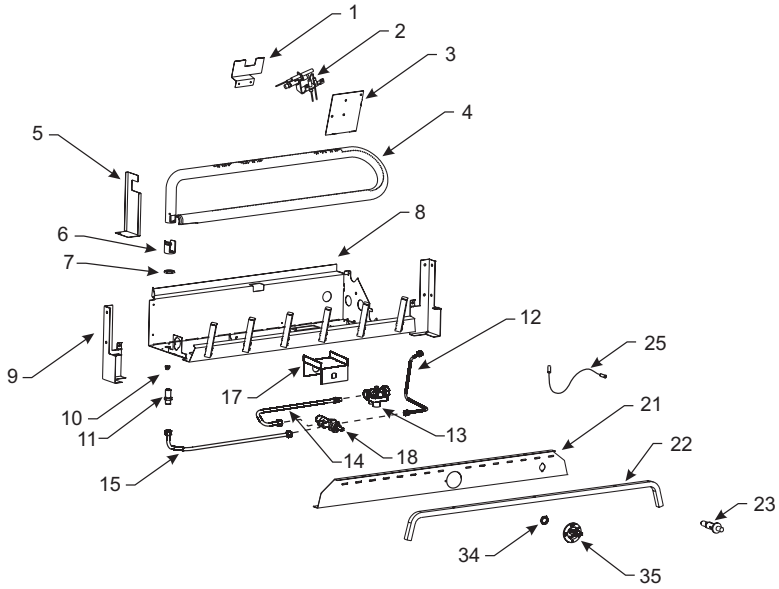

30” BURNER

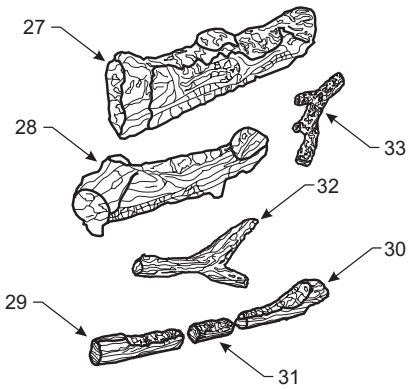

7 PIECE LOG SET

WARRANTY

Empire Comfort Systems Inc. warranties this hearth product to be free from defects at the time of purchase and for the periods specified below. Hearth products must be installed by a qualified technician and must be maintained and operated safely, in accordance with the instructions in the owner's manual. This warranty applies to the original purchaser only and is not transferable. All warranty repairs must be accomplished by a qualified gas appliance technician.

Limited Five-Year Parts & Labor Warranty – All Other Components
(Except Remote Controls, Thermostats, Accessories and Replacement Parts)

Should any part fail because of defective workmanship or material within five years from the date of purchase, Empire will repair or replace at Empire's option. Within five years from the date of purchase, Empire will pay reasonable labor to have that defect repaired at Empire's option.

Limited One-Year Parts Warranty – Remote Controls, Thermostats, Accessories, and Parts

Should any remote control, thermostat, accessory, or other part fail because of defective workmanship within one year from the date of purchase, Empire will repair or replace at Empire's option.

Duties Of The Owner

The appliance must be installed by a qualified installer and operated in accordance with the instructions furnished with the appliance. A bill of sale, cancelled check, or payment record should be kept to verify purchase date and establish warranty period. Ready access to the appliance for service.

What Is Not Covered

Damages that might result from the use, misuse, or improper installation of this appliance.
Travel, diagnostic costs and freight charges on warranted parts to and from the factory.
Claims that do not involve defective workmanship or materials.
Unauthorized service or parts replacements.
Removal and reinstallation cost.
Inoperable due to improper or lack of maintenance.

How To Get Service

To make a claim under this warranty, please have your receipt available and contact your installing dealer. Provide the dealer with the model number, serial number, type of gas, and purchase verification. The installing dealer is responsible for providing service and will contact the factory to initiate any warranted parts replacements. Empire will make replacement parts available at the factory. Shipping expenses are not covered.
If, after contacting your Empire dealer, service received has not been satisfactory, contact: Consumer Relations Department, Empire Comfort Systems Inc., PO Box 529, Belleville, Illinois 62222, or send an e-mail to info@empirecomfort.com with "Consumer Relations" in the subject line.

Your Rights Under State Law

This warranty gives your specific legal rights, and you may also have other rights, which vary from state to state.

APPLIANCE SERVICE HISTORY

Date	Dealer Name	Service Technician Name	Service Performed/Notes

Empire Comfort Systems Inc.
Belleville, IL

If you have a general question about our products, please e-mail us at info@empirecomfort.com.

If you have a service or repair question, please contact your dealer.

www.empirecomfort.com