This Owner's Manual is provided and hosted by Appliance Factory Parts.

Appliance Factory Parts
Experts in BBQ, Humidifier, & Appliance Parts
1-800-955-7075

White Mountain Hearth DVP30CC30N Owner's Manual

Shop genuine replacement parts for White Mountain Hearth DVP30CC30N

Find Your White Mountain Hearth Fireplace Parts - Select From 539 Models

-------- Manual continues below --------

EMPIRE
Cast Iron Stoves

INSTALLATION INSTRUCTIONS
CAST IRON BLOWER
CIB3-3

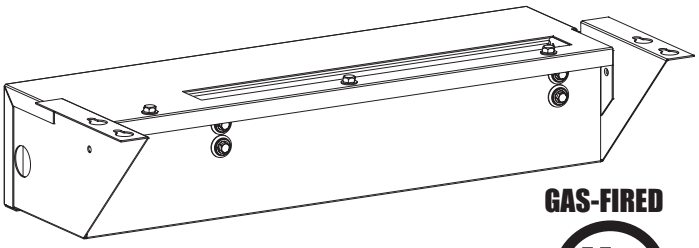

GAS-FIRED

UL LISTED

FOR USE ON:

EMPIRE CAST IRON STOVES MODELS:

DVP30CA30(B,F,M,S,W)(N,P)
DVP30CC(30,70)(B,F,M,S,W)(N,P)
VFP30CA30(B,F,M,S,W)(N,P)
VFD30CC(30,70)(B,F,M,S,W)(N,P)

LEAVE THIS MANUAL WITH THE OWNER FOR FUTURE REFERENCE.

CAUTION: Sharp edges, use protective gloves when installing.

Carton Contents

Blower Assembly
Auto/On/Off Switch
Fan Control Bracket Assembly
Hardware Package
- (2) 10 x 1/2” Screw
- (1) On/Off/Auto Switch
- (1) Rheostat Nut
- (1) Knob, Rheostat

Hardware Package

#10 x 1/2” SCREW

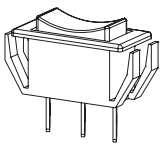

AUTO/ON/OFF SWITCH

NUT

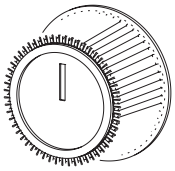

KNOB

Installing Optional CIB3 Blower

1. Loosen, but do not remove, four hex-head screws located on the exterior, bottom of the appliance.
2. Position the blower assembly at the rear of the appliance. The blower assembly has four keyholes for attachment to the exterior, bottom of the appliance.
3. Place the large diameter holes in the keyholes over and behind the four hex-head screws that were loosened in Step 1. Push inward on the blower assembly to lock the keyholes into position behind the screws. Tighten four hex-head screws to secure blower assembly to exterior, bottom of the appliance.
4. Remove wire channel-left from appliance by removing two 10 x 1/2" screws on left side of the appliance.
5. Route fan control wires through rectangular notch on wire channel - left.
6. Attach 1/4" push-on terminal from blue wire on the fan control to the AUTO (top) tab on the switch.
7. Attach 1/4" push-on terminal from black wire to the OFF (middle) tab on the switch.
8. Attach 1/4" push-on terminal from white wire on the fan control to the ON (bottom) tab on the switch.
9. Insert AUTO/OFF/ON switch into rectangular notch on wire channel - left.
10. Install rheostat through hole in wire channel and align small tab with small hole.
11. Use an 11/16” wrench to tighten rheostat nut on stationary
12. Push rheostat knob onto knob stem until fully seated.
13. Bend the fan control tab, located on the left side of the back of the unit, inward toward the unit. See Figure 1. Be sure tab is bent at least 90 degrees to allow fan control bracket to slide into slot.
14. Attach fan control with bracket onto rear cover with two (2) 10 x 1/2" screws provided in hardware package.
15. Route wires from fan control and ON/OFF/REMOTE switch within wire channel.
16. Attach wire channel with two 10 x 1/2" screws from Step 4.
17. Installation of optional CIB3 blower is completed.

Fan Control
The fan control is a non-adjustable automatic type The fan control will require between 5 and 10 minutes of main burner operation before the fan control "closes" and activates the blower. The blower will continue to run between 5 and 10 minutes after the main burner shuts off, before the fan control "opens" and deactivates the blower.

Cleaning
The blower wheel will collect lint and could require cleaning once a year. If the air output decreases or the noise level increases, it indicates a dirty wheel.

Blower Motor
The blower motor does not have oiling holes. Do not attempt to oil blower motor.

Model DVP30CA Shown

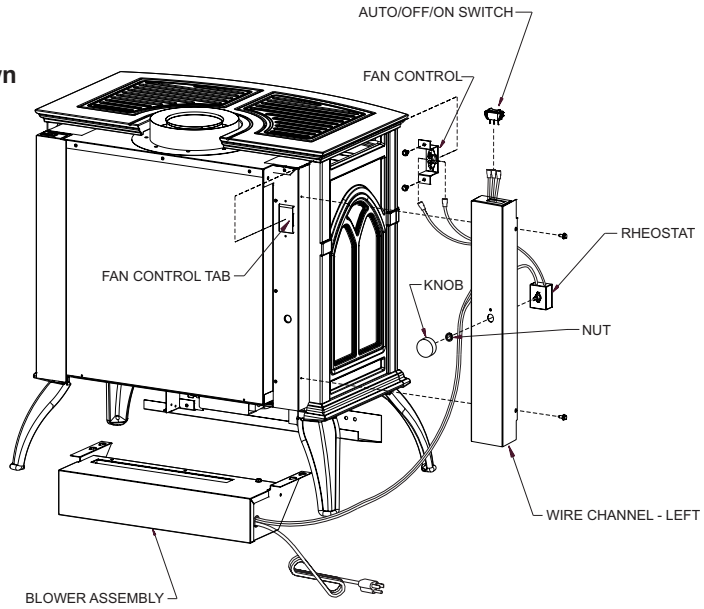

Figure 1

Wiring
The appliance, when installed, must be electrically grounded in accordance with local codes or, in the absence of local codes, with the *National Electrical Code, ANSI/NFPA 70 or Canadian Electrical Code, CSA C22.1*, if an external electrical source is utilized. **This appliance is equipped with a three-prong [grounding] plug for your protection against shock hazard and should be plugged directly into a properly grounded three-prong receptacle. Do not cut or remove the grounding prong from this plug.** For an ungrounded receptacle, an adapter, which has two prongs and a wire for grounding, can be purchased, plugged into the ungrounded receptacle and its wire connected to the receptacle mounting screws. With this wire completing the ground, the appliance cord plug can be plugged into the adapter and be electrically grounded.

CAUTION: Label all wires prior to disconnection when servicing controls. Wiring errors can cause improper and dangerous operation. Verify proper operation after servicing.

WARNING:
Unplugging of blower accessory will not stop the heater from cycling. To shut heater off: Turn temperature dial or thermostat to lowest setting. Turn knob on gas control to "OFF," depressing slightly. Do not force.

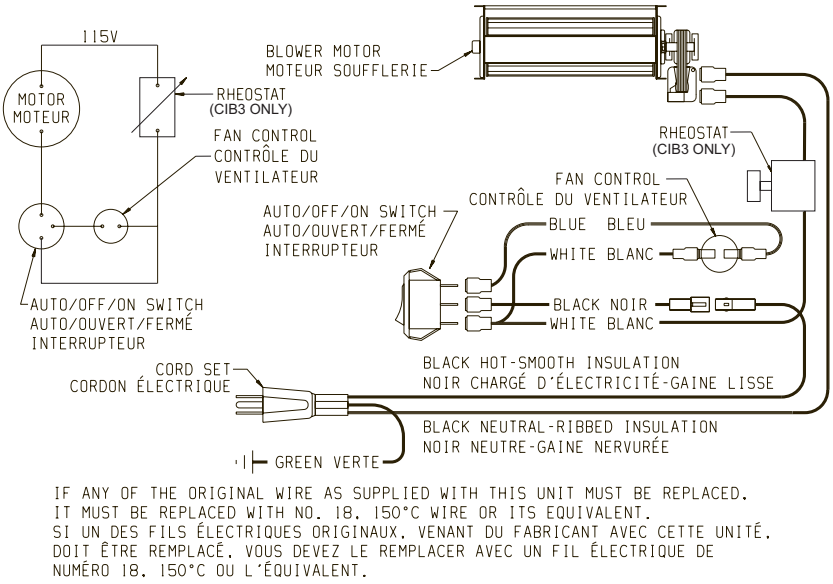

Figure 2

OPTIONAL BLOWER EXPLODED VIEW & PARTS LIST

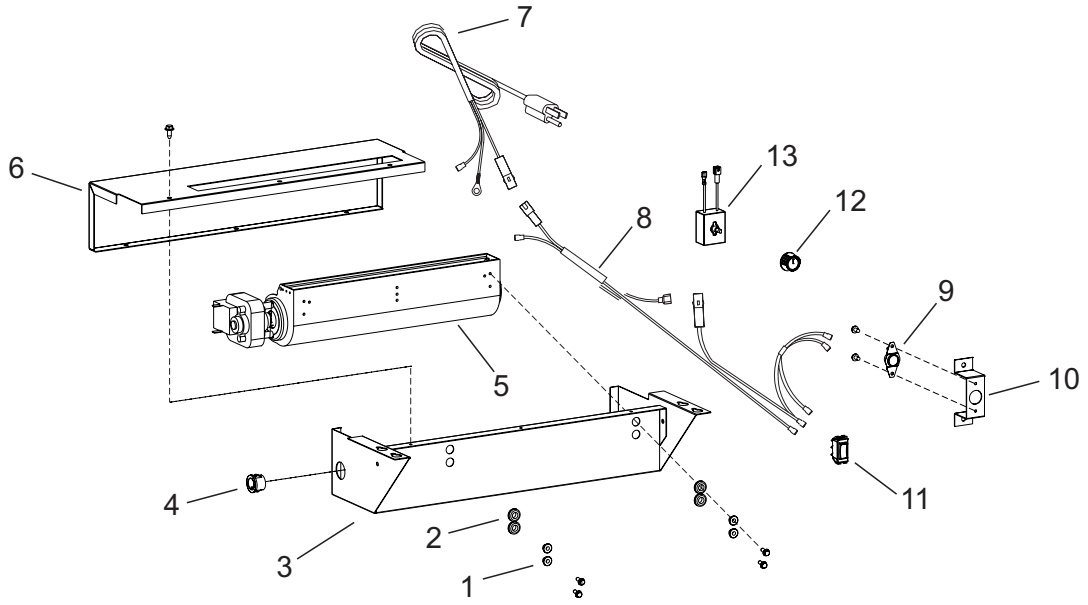

PARTS LIST		
INDEX NUMBER	**PART NUMBER**	**DESCRIPTION**
1	R-1454	BRASS BUSHING
2	R-1499	RUBBER GROMMET
3	31739	BLOWER HOUSING
4	R-1410	STRAIN RELIEF BUSHING
5	R-9927	BLOWER ASSEMBLY
6	24225	BLOWER COVER
7	R-6159	CORD SET
8	R-10363	WIRE HARNESS
9	R-2503	FAN CONTROL
10	24222	FAN CONTROL BRACKET
11	R-2805	AUTO OFF/ON SWITCH
12	R-4192	RHEOSTAT KNOB
13	18879	RHEOSTAT

HOW TO ORDER REPAIR PARTS

Parts Not Under Warranty

Parts can be ordered through your Service Person, Dealer, or a Master Parts Distributor. See this page for the Master Parts Distributors list. For best results, the **service person or dealer** should order parts through the distributor. Parts can be shipped directly to the **service person/dealer**.

Warranty Parts

Warranty parts will need a proof of purchase and can be ordered by your Service Person or Dealer. Proof of purchase is **required** for warranty parts.

All parts listed in the Parts List have a Part Number. When ordering parts, first obtain the Model Number and Serial Number from the name plate on your equipment. Then determine the Part Number (**not** the Index Number) and the Description of each part from the following illustration and part list. Be sure to give all this information . . .

Appliance Model Number _____ Part Description _____

Appliance Serial Number _____ Part Number _____

Type of Gas (Propane or Natural) _____

Do not order bolts, screws, washers or nuts. They are standard hardware items and can be purchased at any local hardware store.

Shipments contingent upon strikes, fires and all causes beyond our control.

Empire Comfort Systems Inc.
918 Freeburg Ave. Belleville, IL 62220

If you have a general question about our products, please e-mail us at info@empirecomfort.com.
If you have a service or repair question, please contact your dealer.