This Owner's Manual is provided and hosted by Appliance Factory Parts.

Appliance Factory Parts
Experts in BBQ, Humidifier, & Appliance Parts
1-800-955-7075

White Mountain Hearth DVC28IN31P-1 Owner's Manual

Shop genuine replacement parts for White Mountain Hearth DVC28IN31P-1

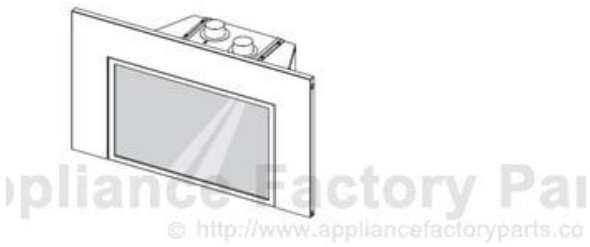

Find Your White Mountain Hearth Fireplace Parts - Select From 539 Models

-------- Manual continues below --------

EMPIRE
COMFORT SYSTEMS
SINCE 1932

INSTALLATION INSTRUCTIONS AND OWNER'S MANUAL

INSTALLER:
Leave this manual with the appliance.
CONSUMER:
Retain this manual for future reference.

DIRECT VENT GAS FIREPLACE HEATER

FIREPLACE INSERT MODELS

DVC(20,26,28)IN31(N,P)-1
DVC(20,26,28)IN71(N,P)-1

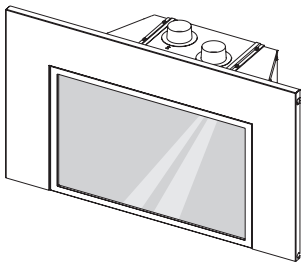

⚠ WARNING

FIRE OR EXPLOSION HAZARD
Failure to follow safety warnings exactly could result in serious injury, death or property damage.

- **Do not store or use gasoline or other flammable vapors and liquids in the vicinity of this or any other appliance.**
- **WHAT TO DO IF YOU SMELL GAS**
  - **Do not try to light any appliance.**
  - **Do not touch any electrical switch; do not use any phone in your building.**
  - **Leave the building immediately.**
  - **Immediately call your gas supplier from a neighbor's phone. Follow the gas supplier's instructions.**
  - **If you cannot reach your gas supplier, call the fire department.**
- **Installation and service must be performed by a qualified installer, service agency or the gas supplier.**

This appliance may be installed into a listed wood-burning fireplace in an aftermarket, permanently located, manufactured home (USA only) or mobile home, where not prohibited by state or local codes.

This appliance is only for use with the type of gas indicated on the rating plate. This appliance is not convertible for use with other gases, unless a certified kit is used.

⚠ DANGER

HOT GLASS WILL CAUSE BURNS.
DO NOT TOUCH GLASS UNTIL COOLED.
NEVER ALLOW CHILDREN TO TOUCH GLASS.

A barrier designed to reduce the risk of burns from the hot viewing glass is provided with this appliance and shall be installed for the protection of children and other at-risk individuals.

NATIONAL FIREPLACE INSTITUTE
NFI
CERTIFIED
www.nficertified.org
We suggest that our gas hearth products be installed and serviced by professionals who are certified in the U.S. by the National Fireplace Institute® (NFI) as NFI Gas Specialists.

GAS-FIRED
c UL us
LISTED
UL FILE NO. MH30033

This fireplace is design certified in accordance with American National Standard/CSA Standard ANSI Z21.88/CSA 2.33 and by Underwriters Laboratories as a Direct Vent Gas Fireplace Heater and shall be installed according to these instructions.

TABLE OF CONTENTS

SECTION	PAGE
Before You Start	3
Carton Contents & Hardware Pack	4
Specifications	5
Homeowner Reference Information	5
Accessories	6
Introduction	8
Fireplace Insert Dimensions	10
Minimum Fireplace Opening Dimensions	11
Mantel and Trim Clearances	11
Gas Supply	12
Fireplace Preparation	14
Venting	15
Installation	16
Installation Diagram	17
Vertical Termination	18
Surround Installation	19
Alternate ON/OFF Switch Installation	20
Barrier Screen Installation	22
Blower Information	23
Log Identification	24
Log Placement	25
Placement of Glowing Embers and Optional Lava Rock	32
Operating Instructions	33
Standing Pilot Lighting Instructions	34
Standing Pilot Wiring	35
Standing Pilot Troubleshooting	36
IPI System Operating Instructions	37
IPI System Electronic System Wiring Diagram	38
Intermittent Pilot Lighting Instructions	39
Intermittent Control System Troubleshooting	40
Maintenance and Service	43
Insert Parts View	45
Insert Parts List	46
Master Parts Distributor List	48
How To Order Repair Parts	48
Important Safety Information	49
Safety Information for Users of LP-Gas	50
For the Homeowner	**51 - 61**
Important Information	52
Standing Pilot (DVC(20,26,28)IN3 Models) Operating Instructions	55
Standing Pilot (DVC(20,26,28)IN3 Models) Lighting Instructions	56
Intermittent Pilot (DVC(20,26,28)IN7 Models) Operating Instructions	57
Intermittent Pilot (DVC(20,26,28)IN7 Models) Lighting Instructions	58
Important Safety Information	59
Appliance Service History	60
Warranty	61

BEFORE YOU START

⚠ WARNING

Read and follow these safety precautions prior to operating this appliance. Failure to follow these precautions may result in death, injury, or property damage.

Samples and Definitions:

⚠ DANGER

Indicates a hazardous situation which, if not avoided, will result in death or serious injury.

⚠ WARNING

Indicates a hazardous situation which, if not avoided, could result in death or serious injury.

⚠ CAUTION

Indicates a hazardous situation which, if not avoided, could result in minor or moderate injury.

NOTICE: Addresses practices not related to personal injury.

Attention! If the fireplace insert is installed into a modified wood-burning, factory-built fireplace, the fireplace cannot be returned to a wood-burning fireplace. See page 14 for additional details regarding the allowed modifications to a factory-built fireplace.

Read all instructions before starting installation and follow them carefully to insure safety. Failure to follow the instructions will void the warranty and may cause a fire hazard.

The warranty will be voided by, and the warranter disclaims any responsibility for the following actions:

- Installation of any damaged fireplace insert or vent system component.
- Modification of the fireplace insert or direct vent system.
- Installation other than as instructed by Empire Comfort Systems Inc.
- Improper positioning of logs, glass door, barrier screen, or decorative accessories.
- Installation and/or use of any component part not manufactured or approved by the manufacturer.

All correspondence should refer to complete Model Number, Serial Number and type of gas. Fill out the Homeowner Reference Section on page 5.

Unpacking the fireplace insert

1. Cut binding straps.
2. Remove the top carton.
3. Carefully remove the carton contents.
4. Use the Carton Contents and Hardware Pack lists on page 4 to verify all components are present.
5. Verify that the fireplace insert and components have not been damaged during shipping.
6. Set fireplace insert in a location near its final installation location.

Preparation

This fireplace insert and its components are safe when installed in accordance with this Installation Manual. Report any parts damaged in shipment to your dealer. Do not install the fireplace insert with damaged, incomplete or substitute parts.

Installation Considerations

- The firebox must be in good working order and sized according to page 11.
- Gas supply piping – right or left side entrance
- Electrical supply and connections – for blower
  - 120V, 60Hz, 1 Amp
  - Right side entrance
- Surround Requirements - See Fireplace Insert Dimensions, page 10 and Accessories, page 6.
- Surround Bottom Cover - For elevated insert installations. See Accessories, page 6.
- Shroud Requirements - See Accessories, page 6.
- Leveling the Insert - Four leveling bolts are included in the Hardware Pack. See page 4 for size and page 16 for installation and use.

1. Read the safety information pages 49 - 50 and 59.
2. Place the sticker located in the instruction envelope onto the “Homeowner Reference Information” page 5.
3. Show the homeowner where the rating plate and lighting instruction plate are located.
6. Install and connect the gas lines. See pages 12 and 13.
7. Install the wiring. See pages 35 and 38.
8. Install the venting. See pages 15 - 17.
9. Install the fireplace insert. See page 16.
10. Light the fireplace insert. See pages 34 and 39.
11. Troubleshoot issues. See pages 36, and 40 - 42.
12. Show the homeowner how to operate the fireplace insert.
13. Show the homeowner how do the basic maintenance.

CARTON CONTENTS & HARDWARE PACK

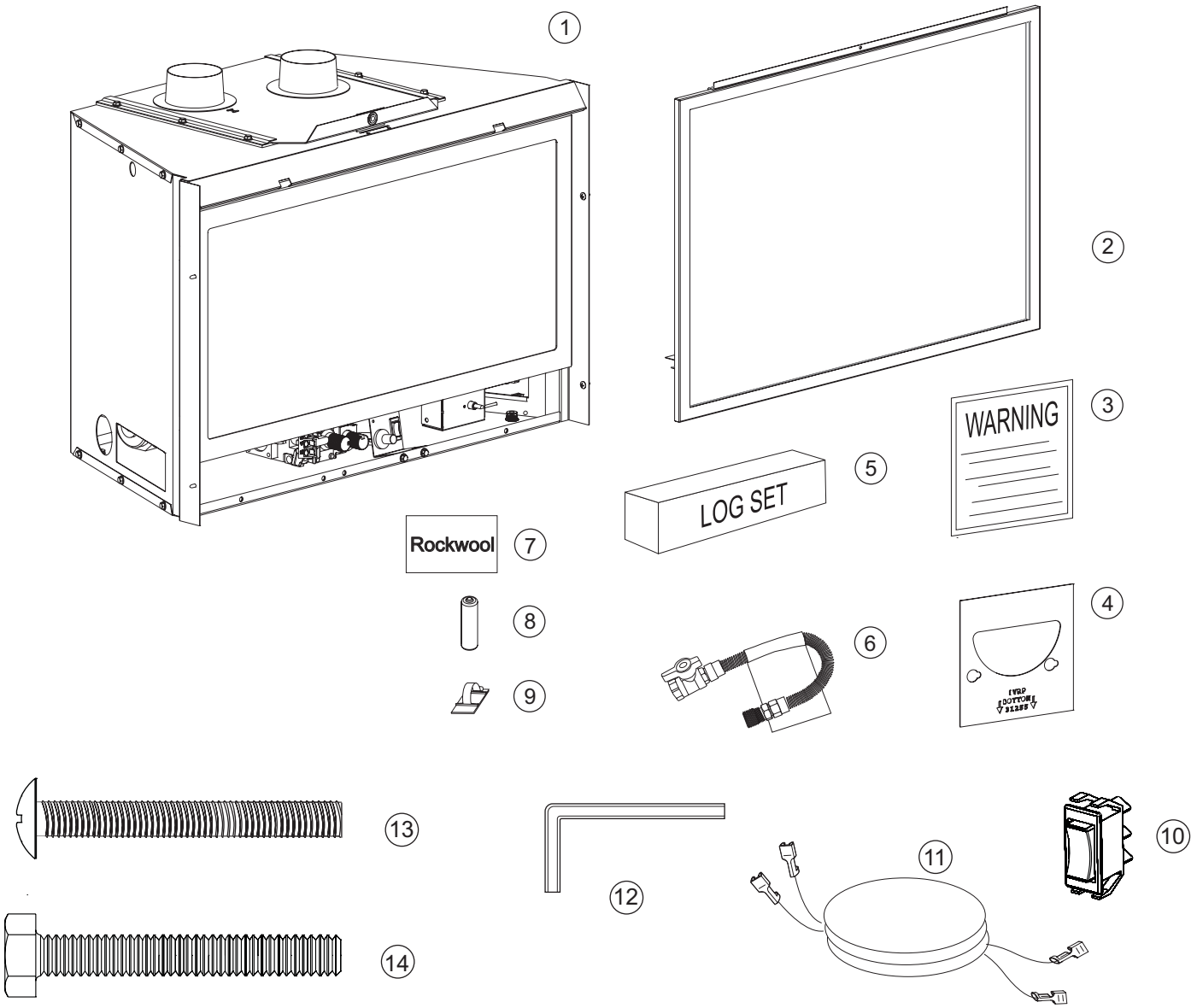

Index Number	Description	Quantity Supplied		Location
		MV	IP	
1	Fireplace Insert	1	1	In carton
2	Barrier Screen Assembly	1	1	Front of Insert
3	Warning Label Plate	1	1	In envelope
4	Restrictor Plate	1	1	In envelope
5	Log Set	1	1	Inside Insert firebox
6	Flex Line with Shutoff	1	1	Attached to the gas valve
7	Rockwool Embers	1	1	In envelope
8	AA Batteries	0	4	In envelope
9	Wire Retainer Clips	3	3	In envelope
10	ON/OFF Switch	1	1	In envelope
11	Extension Wire Harness	1	1	In envelope
12	3/16 Allen Wrench	1	1	In envelope
13	5/16-18 Allen Head bolt, 2-1/2 inches long	1	1	In envelope
14	5/16-18 Hex Head bolt, 2-1/2 inches long	4	4	In envelope

SPECIFICATIONS

	DVC20IN(3,7)		DVC26IN(3,7)		DVC28IN(3,7)	
	LP	NAT	LP	NAT	LP	NAT
Input BTU/Hr Maximum	19,500	20,500	26,000	26,000	27,500	28,500
Input BTU/Hr Minimum	15,000	14,500	20,000	17,000	21,000	18,500
KWH (Maximum)	5.37	5.95	7.54	7.54	7.98	8.27
KWH (Minimum)	4.2	4.2	5.8	5.36	6.38	5.36
Orifice	1.30mm	#44	#53	#40	1.55mm	2.60mm
Air Shutter Opening	1/2 inch open	1/8 inch open	1/2 inch open	3/16 inch open	1/2 inch open	3/16 inch open
Gas Inlet Shutoff Valve (pipe)	1/2 NPT	1/2 NPT	1/2 NPT	1/2 NPT	1/2 NPT	1/2 NPT

NOTICE: Air shutter settings are factory minimum settings. Some venting configurations may require minor air shutter adjustments for optimum performance.

GAS SUPPLY PRESSURES			
GAS TYPE	MAXIMUM	MINIMUM	MANIFOLD
NAT	14	4.5	3.5
LP	14	11	10

HOMEOWNER REFERENCE INFORMATION

We recommend that you record the following information about your fireplace.

Model Number: _____ Date purchased: _____

Serial Number: _____ Location of fireplace: _____

Dealer Name: _____ Dealer Phone: _____

Notes: _____

ACCESSORIES

Surrounds (Required)						
	DVC20IN		DVC26IN		DVC28IN	
	Black	Bronze	Black	Bronze	Black	Bronze
3 x 6 x 1	DS2063BL	DS2063BZ	DS2663BL	DS2663BZ	DS2863BL	DS2863BZ
3 x 6 x 1 Bottom Cover	C203BL	C203BZ	C263BL	C263BZ	C283BL	C283BZ
3 x 6 x 2-1/4*	DS2063DBL	DS2063DBZ	-	-	-	-
3 x 6 x 2-1/4 Bottom Cover	C203DBL	C203DBZ	-	-	-	-
6 x 6 x 1	DS2066BL	DS2066BZ	DS2666BL	DS2666BZ	DS2866BL	DS2866BZ
9 x 6 x 1	DS2096BL	DS2096 BZ	DS2696BL	DS2696BZ	DS2896BL	DS2896BZ
6 x 6 x 1 Bottom Cover	C206BL	C206BZ	C266BL	C266BZ	C286BL	C286BZ
6 x 6 x 2-1/4*	DS2066DBL	DS2066DBZ	-	-	-	-
9 x 6 x 2-1/4	DS2066DBL	DS2066DBZ	-	-	-	-
6 x 6 x 2-1/4 or 6 x 9 x 2-1/4 Bottom Cover	C206DBL	C206DBZ	-	-	-	-
6-Inch Cast Iron (Requires Adator Kit)	SC256BL	-	SC336BL	-	SC356BL	-
Cast Iron Surround Adaptor Kit	SAK20	-	SAK26	-	SAK28	-

***NOTICE:** DVC20IN fireplace inserts can be installed with either surround. The 6 x 6 x 2-1/4 or 9 x 6 x 2-1/4 inch surround allows the fireplace insert to be installed in a 13-5/8 inch deep fireplace. This option is not available for DVC(26,28)IN fireplace insert models.

Decorative Front (Requires Surround)						
	DVC20IN		DVC26IN		DVC28IN	
	Black	Bronze	Black	Bronze	Black	Bronze
Lancaster	DVF20HBL	DVF20HBZ	DVF26HBL	DVF26HBZ	DVF28HBL	DVF28HBZ

Door Fronts (Requires Surround)			
	DVC20IN	DVC26IN	DVC28IN
Transom	DFD20DBL	DFD26DBL	DFD28DBL
Horizon	DFD20HBL	DFD26DHBL	DFD28HBL

Shroud (Requires Surround)		
SH1BL	Black	For fireplace openings up to (in inches) 48H x 36W

Liners			
	DVC20IN	DVC26IN	DVC28IN
Porcelain Black	DVP20KR	DVP26KR	DVP28KR
Banded Brick*	DVP20AE	DVP26AE	DVP28AE
Traditional Aged Brick	DVP20DF	DVP26DF	DVP28DF
Traditional Washed	DVP20BW	DVP26BW	DVP28BW
Herringbone*	DVP20SH	DVP26SH	DVP28SH

* Herringbone Liners available only for American Hearth models; Banded Brick Liners available only for White Mountain Hearth models.

ACCESSORIES

Venting Kits	Description	Contents
DVKI2P	Vertical Vent Kit 17-1/2’	High Wind Round Cap, Flashing, connectors, and clamps. Recommended when installing to an existing round fireplace chimney pipe.
DVK35	Vent Extension Kit	35 foot flex vent extension section with 2 connectors and 4 clamps
SD46DVACL33	High Wind Vertical Vent Kit	Two 3-inch diameter X 35-feet long lengths of Flex venting, High Wind Round Termination, flashing, and clamp connectors

NOTICE: When installing vent caps, special locally made flashings may be required to properly seal the vent system to the existing chimney termination.

Remote Controls	Description
FRBC	Millivolt Battery Remote ON/OFF
FRBTC	Millivolt Battery Remote Thermostat
TRW	Millivolt Wireless Wall Thermostat
TMV	Millivolt Reed Switch Wall Thermostat
FWS-1	Millivolt Wall Switch
RVKN	Remote Control Variable Flame Height Kit (Nat) (DVC(20,26,28)IN71N only)
RVKP	Remote Control Variable Flame Height Kit (LP) (DVC(20,26,28)IN71P only)

Gas Conversion Kits			
Kit Number	**Conversion Type**	**Used On**	**Valve Type**
36395	LP to NAT	DVC20IN3	MV
36396	NAT to LP	DVC20IN3	MV
36722	LP to NAT	DVC20IN7	IP
36723	NAT to LP	DVC20IN7	IP
36397	LP to NAT	DVC26IN3	MV
36398	NAT to LP	DVC26IN3	MV
36724	LP to NAT	DVC26IN7	IP
36725	NAT to LP	DVC26IN7	IP
36399	LP to NAT	DVC28IN3	MV
36400	NAT to LP	DVC28IN3	MV
36726	LP to NAT	DVC28IN7	IP
36727	NAT to LP	DVC28IN7	IP

INTRODUCTION

Instructions to Installer

1. Leave this manual with the homeowner.
2. Have the homeowner fill out and mail the Product Registration Card supplied with the fireplace insert or online at www.empirecomfort.com.
3. Show the homeowner how to start and operate the fireplace insert.
4. Manually attach the warning label plate supplied with the gas fireplace insert to the inside of the firebox of the fireplace into which the gas fireplace insert is installed.
5. **Run fireplace insert for a minimum 30 to 35 minutes to burn off oils from manufacturing. Failure to perform this initial burn-off can cause pilot problems. After burn-off, clean flame sensor on IP pilot assembly. See page 39 for sensor location.**

Important

All correspondence should refer to complete Model Number, Serial Number and type of gas.

Qualified Installing Agency

Installation and replacement of gas piping, gas utilization equipment or accessories and repair and servicing of equipment shall be performed only by a qualified agency. The term “qualified agency” means any individual, firm, corporation or company which either in person or through a representative is engaged in and is responsible for (a) the installation or replacement of gas piping or (b) the connection, installation, repair or servicing of equipment, who is experienced in such work, familiar with all precautions required and has complied with all the requirements of the authority having jurisdiction.

Commonwealth of Massachusetts: The installation must be made by a licensed plumber or gas fitter in the Commonwealth of Massachusetts.

Installation and repair should be done by a qualified service person. The appliance should be inspected before use and at least annually by a qualified service person. More frequent cleaning may be required due to excessive lint from carpeting, bedding material, etc. It is imperative that control compartments, burners and circulating air passageways of the appliance be kept clean.

High Altitude

When installing this unit at an elevation above 2000 feet (in the United States) it may be necessary to decrease the input rating by changing the existing burner orifice to a smaller size. Generally, input should be reduced 4 percent for each 1000 feet above sea level. However, if the heating value of the gas has been reduced, this general rule may not apply. Confirm orifice size with Empire Comfort Systems.

Canadian High Altitude

Altitude: 0-4500 feet (0-1370 m)

When installing this unit at an elevation above 4500 feet (in Canada), check with local authorities.

Consult your local gas utility for assistance in determining the proper orifice for location.

Building Codes

Consult your local building code agency, prior to installation, to ensure compliance with local codes-including permits and inspections.

- The installation must conform with local codes or, in the absence of local codes, with the *National Fuel Gas Code ANSI Z223.1/NFPA 54* Natural Gas and Propane Installation Code, or CSA B149.1 in Canada. *Available from the American National Standards Institute, Inc. 11 West 42nd St., New York, N.Y. 10036.*
- The fireplace insert, when installed, must be electrically grounded in accordance with local codes or, in absence of local codes, with the *National Electric Code ANSI/NFPA 70* or Canadian Electric code, CSA C22.1, if an external electrical source is utilized.

Preparation

This direct vent gas fireplace insert and its components are tested and safe when installed in accordance with this Installation Manual. The fireplace insert must be installed into a wood-burning fireplace. Report to your dealer any parts damaged in shipment, specifically check glass condition. Do not install unit with damaged, incomplete, or substitute parts. Read all instructions before starting installation and follow these instructions carefully during installation to ensure maximum benefit and safety. Failure to follow them will void the warranty and may present a fire hazard.

This direct vent gas fireplace insert is designed to operate with combustion air siphoned from and all exhaust gases expelled to the outside of the building. The information contained in this manual pertains to all models and gas control systems listed on the front page unless otherwise noted.

These models may be installed in a bedroom or bed-sitting room in the U.S.A. and Canada.

⚠ WARNING

Any change to this fireplace insert or its controls can be dangerous.

Improper installation or use of the fireplace insert can cause serious injury or death from fire, burns, explosions, or carbon monoxide poisoning.

Before enclosing the vent pipe assembly, operate the appliance to ensure it is venting properly.

Do not operate this appliance without the glass door installed.

- Due to high temperatures, the appliance should be located out of traffic and away from furniture and draperies.
- Only trim kit(s) supplied by the manufacturer shall be used in the installation of this appliance.
- Any safety screen, guard, or barrier removed to service an appliance must be replaced prior to operating the appliance.
- If the barrier becomes damaged, the barrier shall be replaced with the manufacturer’s barrier for this appliance.
- A barrier designed to reduce the risk of burns from the hot viewing glass is provided with this appliance and shall be installed for the protection of children and other at-risk individuals.
- Only doors certified with the appliance shall be used.
- The glass front or any part removed for servicing the appliance must be replaced prior to operating the appliance.

INTRODUCTION

Warranty Information
Any alteration of the original design, installed other than as shown in these instructions or use with a type of gas not shown on the rating plate is the responsibility of the person and company making the change.

The warranty will be voided by, and the warranter disclaims any responsibility for the following actions:

- Installation of any damaged fireplace insert or vent system component.
- Modification of the fireplace insert or direct vent system.
- Installation other than as instructed by Empire Comfort Systems, Inc.
- Improper positioning of the logs or glass door assembly.
- Installation and/or use of any component part not manufactured or approved by manufacturer.
- This appliance comes standard with a 120 V/AC cord assembly to accommodate the blower accessory. An outlet box may be installed in a bottom back corner of the existing solid fuel masonry or factory built fireplace to plug in the cord assembly, or the supplied power cord may be routed out onto the hearth to a nearby outlet.
- A 120 V/AC circuit for this product must be protected with ground-fault circuit-interrupter protection, in compliance with the applicable electrical codes, when it is installed in locations such as in bathrooms or near sinks.
- Low voltage and 120 V/AC cannot be shared within the same wall box.
- Once the appliance installation is completed, the installer should check that control compartment wiring is secured in a manner as to not interfere with blower, door latches, valve controls, or the barrier assembly.

FIREPLACE INSERT DIMENSIONS

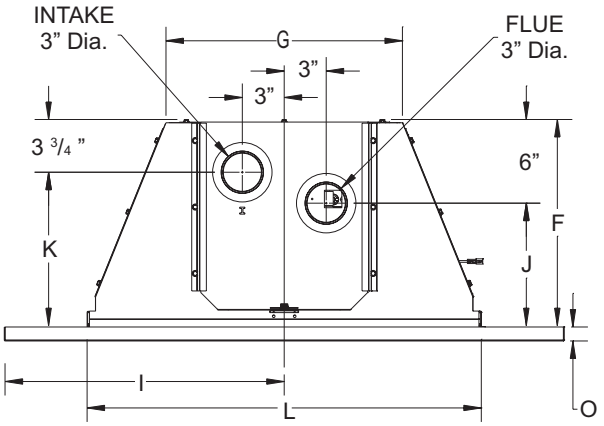

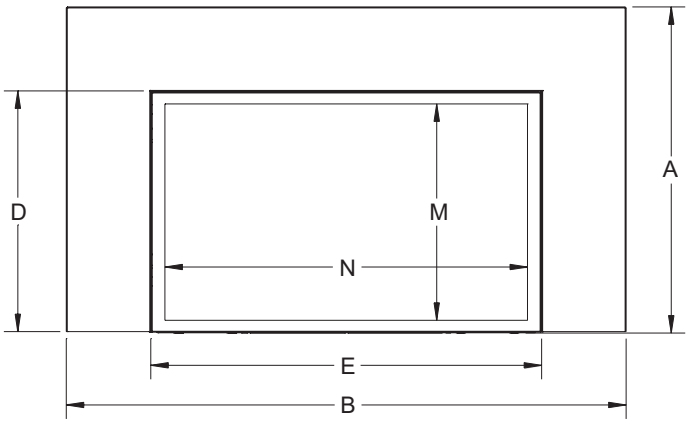

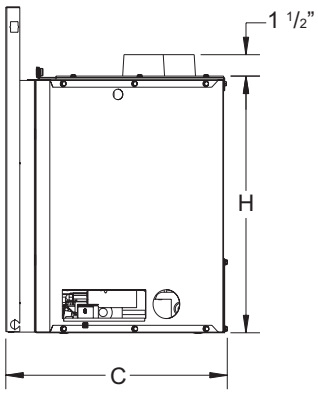

INDEX LETTER	DIMENSION DESCRIPTION	DVC20IN with 1-inch Surround	DVC20IN with Deep Surround	DVC26IN	DVC28IN
		Dimensions in Inches			
A	Surround Height	23-1/4	23-1/4	26-1/4	28-1/4
B	Surround width with 3-inch wide Surround Legs	34	34	37	40
B	Surround width with 6-inch wide Surround Legs	40	40	43	46
C	Overall Depth of Insert including Surround	15-7/8	15-7/8	17-5/8	17-5/8
D	Barrier Screen Height	17-1/4	17-1/4	20-1/4	22-1/4
E	Barrier Screen Width	27-7/8	27-7/8	30-7/8	33-7/8
F	Insert depth - from back of Surround to rear of insert	14-7/8	13-5/8	16-5/8	16-5/8
G	Rear width of Insert	17	17	18-3/4	21-3/4
H	Height of Insert	18-1/2	18-1/2	21-1/2	23-1/2
I	Centerline of Insert to outside of 3-inch wide Surround Leg	17	17	18-1/2	20
I	Centerline of Insert to outside of 6-inch wide Surround Leg	20	20	21-1/2	23
J	Back of Surround to Centerline of Flue Outlet	8-7/8	7-5/8	10-9/16	10-9/16
K	Back of Surround to Centerline of Air Inlet	11-3/16	9-15/16	12-7/8	12-7/8
L	Front width of Insert cabinet	28-3/16	28-3/16	31-3/16	34-3/16
M	Barrier Screen opening height	15-1/2	15-1/2	18-1/2	20-1/2
N	Barrier Screen opening width	25-15/16	25-15/16	28-15/16	31-15/16
O	Surround depth	1	2-1/4	1	1

MINIMUM FIREPLACE OPENING DIMENSIONS

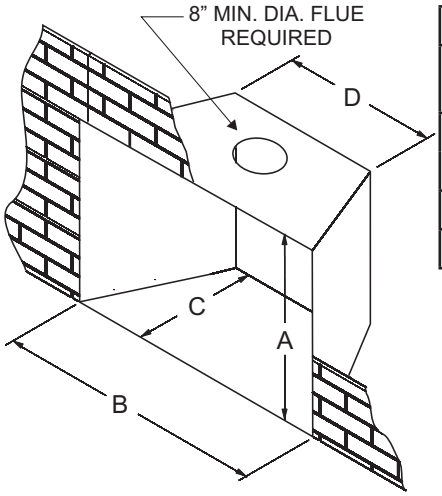

Dimensions (in inches)				
Model No.	**Height A**	**Front Width B**	**Depth C**	**Rear Width D**
DVC20IN	18-1/2	28-1/4	14-7/8 with 1-inch deep surround	17-1/4
			13-5/8 with 2-1/4 inch deep surround	
DVC26IN	21-1/2	31-1/4	16-5/8	19
DVC28IN	23-1/2	34-1/4	16-5/8	22

MANTEL AND TRIM CLEARANCES

Combustible Material
No greeting cards, stockings or ornamentation of any type should be placed on or attached to the fireplace. The flow of heat can ignite combustibles.

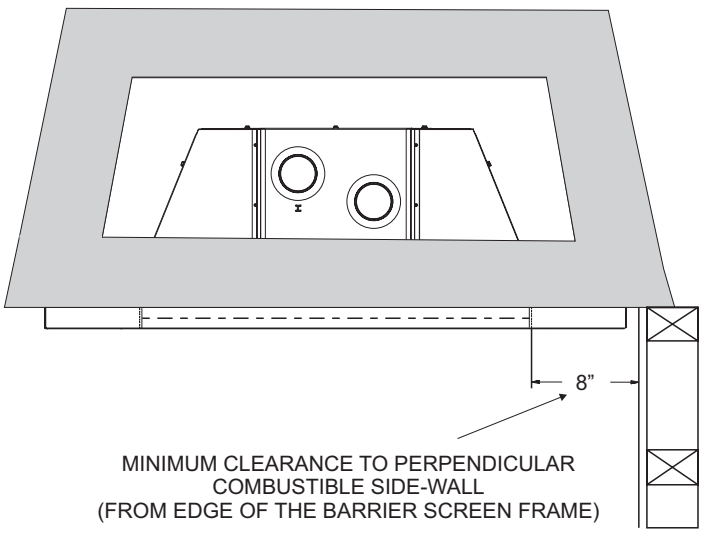

Figure 1

Television Considerations
Installing a television above a fireplace has become increasingly popular; however, the area above any fireplace gets hot and most TV manufacturers recommend against placing their products near a heat source.
If you install a television above this fireplace insert, Empire Comfort Systems accepts no responsibility for damage or injuries. Follow the television manufacturer’s installation instructions, including any recommendations regarding proximity to heat sources.
If you have a TV above your fireplace, turn off the fireplace and let it cool completely before servicing or touching any buttons on the TV.

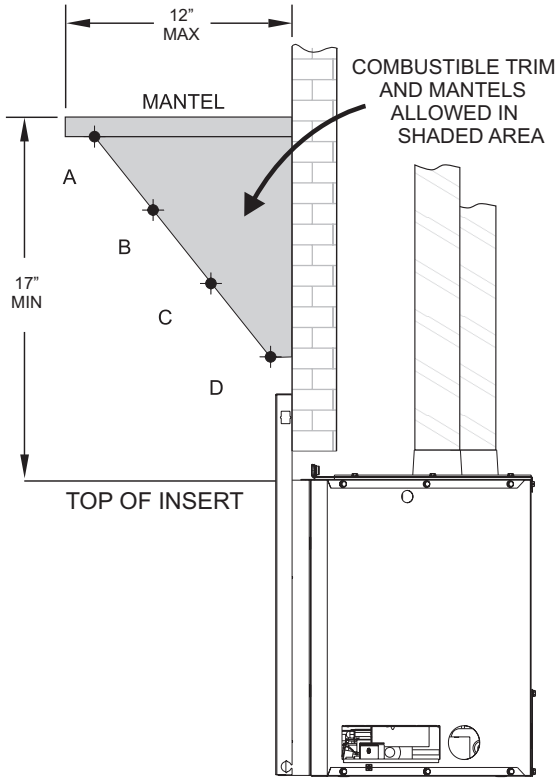

Index Letter	Distance from Fireplace Face	Distance from Top of Surround
	Dimensions in inches	
A	9-1/4	16
B	7-1/4	13
C	4-1/2	12
D	1-3/4	8

Figure 2

GAS SUPPLY

If the factory-built fireplace has no gas access hole(s) provided, an access hole of 1.5 inch (37.5 mm) or less may be drilled through the lower sides or bottom of the firebox in a proper workmanship-like manner. This access hole must be plugged with non-combustible insulation after the gas supply line has been installed.

The gas pipeline can be brought in through the right or left side of the appliance. The insert has a Flexline with shutoff valve located on the right side when facing the unit. **See Figures 3 and 4.**

Consult the current National Fuel Gas Code, ANSI Z223.1 CAN/CGA-B149 (.1 or .2) installation code.

NOTICE: Once the gas access hole is drilled through the bottom of the firebox and through the fireplace, the fireplace cannot be converted back to a solid-fuel burning fireplace.

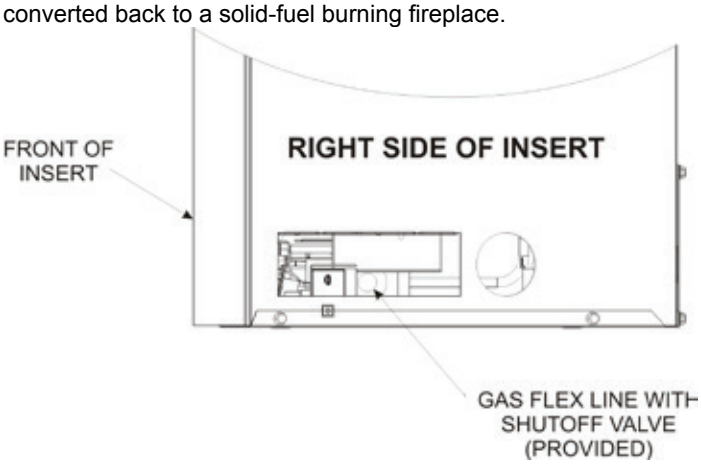

Figure 3

Recommended Gas Pipe Diameter				
Pipe Length	**Schedule 40 Pipe Inside Diameter**		**Tubing, Type L Outside Diameter**	
	NAT	Propane	NAT	Propane
	(Dimensions in Inches)			
0-10ft	1/2	3/8	1/2	3/8
11-40ft	1/2	1/2	5/8	1/2
41-100ft	1/2	1/2	3/4	1/2
101-150ft	3/4	1/2	7/8	3/4

NOTICE: Never use plastic pipe. Check local codes before using copper tubing or galvanized.

NOTICE: Some municipalities have additional codes. Consult your local authority and installation code.

Use the following gas connectors:

— ANSI Z21.24 Appliance Connectors of Corrugated Metal Tubing and Fittings.

— ANSI Z21.45 Assembled Flexible Appliance Connectors of Other Than All-Metal Construction

The above connectors may be used if acceptable by the authority having jurisdiction. The Commonwealth of Massachusetts requires that a flexible appliance connector cannot exceed three feet in length.

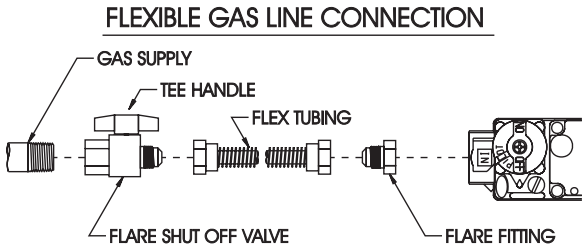

Figure 4

Install a gas valve and ground joint union in the gas line upstream of the gas control to aid in servicing. The National Fuel Gas Code requires installing a drip leg near the gas inlet. The drip leg consists of a vertical length of capped pipe installed before the gas inlet to collect condensation and foreign particles. **See Figure 5.**

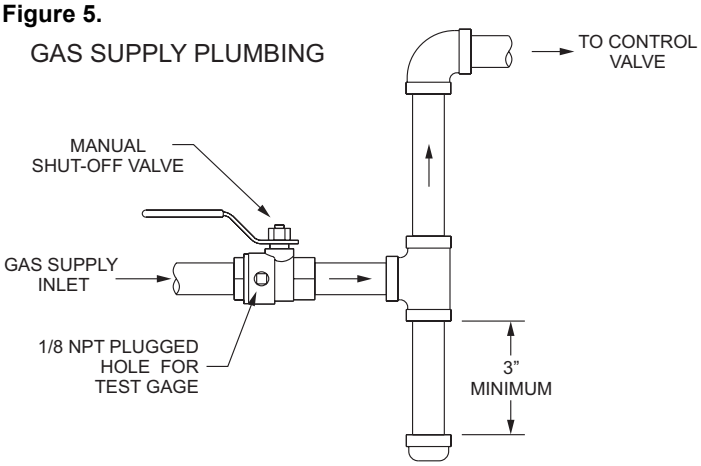

Figure 5

GAS SUPPLY

Installing a New Main Gas Shut-Off Valve

Each appliance must have its own manual gas shut-off valve located in the vicinity of the fireplace. Where none exists, or where its size or location is not adequate, contact your local authorized installer for replacement or relocation.

Test for leaks. Turn fireplace off. Compounds used on threaded joints of gas piping must be resistant to the action of liquefied petroleum gases. The installer must check all gas connections for leaks. Perform all leak tests with a leak test solution or soap solution. Rinse off all solution once testing is complete. Perform a pressure test on all unexposed connections.

Never use an exposed flame to check for leaks. Never pressure test with fireplace connected; control valve will sustain damage. Disconnect the fireplace from piping at the control valve inlet and cap the pipe before pressure testing.

***NOTICE*:** The millivolt gas controls are equipped with a captured screw type pressure test point, therefore it is not necessary to provide a 1/8-inch test point upstream of the control.

When using copper or flex connector use only approved fittings. Disconnect the appliance and its individual shut-off valve from the gas supply piping system during any pressure testing of that system at test pressures in excess of 1/2 psig (3.5kPa).

Isolate the appliance from the gas supply piping system by closing its manual shut off valve during any pressure testing of the gas supply piping system at test pressures equal to or less than 1/2 psig (3.5kPa).

⚠ WARNING

If one of the procedures results in pressures in excess of 1/2 psig (14-inch w.c.) (3.5 kPa) on the fireplace gas valve, it will result in a hazardous condition.

Checking Manifold Pressures

Both Propane and Natural gas valves have a built-in pressure regulator in the gas valve.

Natural gas models will have a manifold pressure of approximately 3.5-inch w.c. (.871kPa) at the valve outlet with the inlet pressure to the valve from a minimum of 4.5-inch w.c. (1.120kPa) for the purpose of input adjustment to a maximum of 14.0-inch w.c. (3.484kPa).

Propane models will have a manifold pressure of approximately 10.0-inch w.c. (2.49kPa) at the valve outlet with the inlet pressure to the valve from a minimum of 10.8-inch w.c. (2.68kPa) for the purpose of input adjustment to a maximum of 14.0-inch w.c. (3.484kPa).

	Gas Supply Pressure (inches w.c.)		
	Minimum	Normal	Maximum
Natural Gas	4.5	7.0	14.0
LP (Propane)	10.8	11.0	14.0
	Manifold Pressure (inches w.c.)		
	Normal (HI)		
Natural Gas	3.5		
LP (Propane)	10.0		

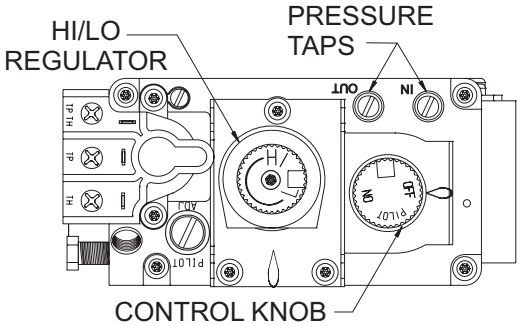

Figure 6 - Millivolt Valve

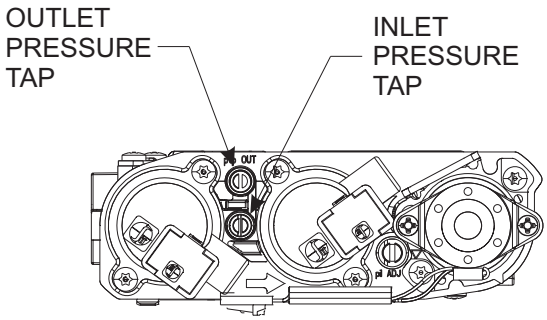

Figure 7 - IP Valve

FIREPLACE PREPARATION

Before You Start
Before installing, read these instructions and the Vent Kit Instructions to ensure proper installation. Consult local Building Codes before beginning the Installation.

***NOTICE*: Cutting the sheet metal parts of an existing fireplace in order to install the fireplace insert is prohibited.**

1. The fireplace and fireplace chimney must be cleaned, in good working order. The approved chimney for the factory-built fireplace or masonry chimeny must be used to run venting through.

NOTE: Do not handle barrier screen or door assembly with your bare hands! (Always Wear Gloves)

2. Remove the barrier screen, glass door and log package from fireplace insert. Check to make sure there is no damage to the fireplace insert or its components.
3. Plan out the gas, venting and electrical route. Start with the gas line, followed by the chimney preparation and electrical supply requirements.
4. The minimum fireplace opening requirements are shown in **Page 11** of this installation manual. The firebrick (refractory), glass doors, screen rails, screen mesh and log grates can be removed from a factory built fireplace to gain minimum gas insert opening requirements prior to installing the gas fireplace insert. See Figure 8.
5. Remove or lock the fireplace flue damper in the fully open position prior to installing the gas fireplace insert.
6. Make sure that all chimney cleanouts fit properly so air cannot leak into the chimney.
7. The fireplace insert does not require any additional hearth extension. However, the original hearth materials installed with the fireplace must be retained. If the original materials have been damaged or removed, a new one must be installed. Hearth materials must consist of a non-combustible material such as brick, tile, slate, marble, or other non-combustible surface extending the width of the fireplace and out a minimum of 16 inches in front. Wood flooring, vinyl, or carpet are not allowed directly in front of the fireplace insert. ***NOTICE***: The original fireplace cannot be returned to solid fuel use without returning the hearth extension to the specification required for a solid fuel fireplace.
8. The metal floor of the solid fuel firebox may be removed to install the insert. If the firebox floor is removed, the insert must be raised off the floor of the fireplace at least 1/4 inch to protect the combustible surface under the original fireplace. Clearance to combustible material under the insert is 1/4-inch. Combustible material must not be placed inside the original area. The side walls and top structure of the firebox may not be altered with the exception of removable baffles and dampers. Fire screens, refractory liners (sides and floor), smoke shields, shelves and baffles may be removed if attached with mechanical fasteners. The original fireplace cannot be returned to solid fuel in this condition. See Figure 8.

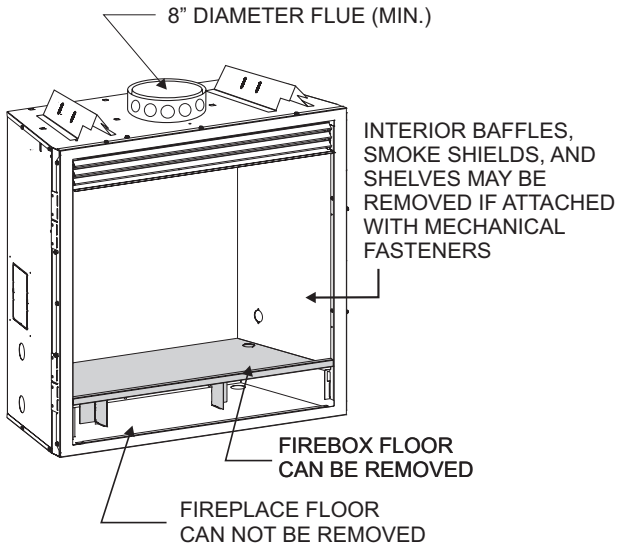

GENERIC FACTORY-BUILT WOODBURNING FIREPLACE SHOWN
Figure 8

***NOTICE*: The following statement is also provided on a separate warning label plate in the instruction packet. Prior to installation of the fireplace insert, the installer must mechanically secure this warning label plate to the inside of the fireplace for future reference as required.**

⚠ WARNING

This solid fuel fireplace has been converted for use with gas only and cannot be used for burning wood or solid fuels unless all original parts have been replaced and the fireplace has been reapproved by the authority having jurisdiction.

Clearances

- Maintain the original specified exterior clearances of the factory-built fireplace and vent system.
- Maintain mantel and trim clearances on a masonry fireplace at 12 inches above the opening for combustible projections over 1-1/2 inch.
- Clearances for combustible projections under 1-1/2 inch must be maintained at 6 inches above the opening per NFPA211. Plan the surround size accordingly. A surround must be used with the insert. **Under no circumstance can combustible material be placed behind the surround or behind the insert!**

VENTING

Vent System Installation Precautions
Before installing vent kits, read these instructions and the Vent Kit Instructions to ensure installation. Consult local Building Codes before beginning the Installation.
To ensure top performance, safety and efficiency, inserts must be installed with an approved flue liner as per CAN/CGA B-149 or National Fuel Code ANSI Z223 and these instructions.

⚠ WARNING

This gas insert and vent assembly must be vented directly to the outside and must never be attached to a chimney serving a separate solid-fuel burning or gas-venting appliance.

Vent System Approvals
Figure 10 shows the vent termination cap and system approved for use with these models. Approved vent system terminations are labeled for identification. Use 3-inch diameter, flexible aluminum or stainless steel gas venting for both the incoming combustion air and exhaust vent pipes. **No other venting systems or components may be used.** Detailed installation instructions are included with each vent termination kit and should be used in conjunction with this manual.

Horizontal Venting
The vent system on this model **CANNOT** be terminated horizontally.

Vertical Venting
The inlet and exhaust vent pipes **MUST** be connected to the proper collars on the unit **AND** to the termination cap or the unit will not operate. The intake vent collar is identified by a stamped "I" on the top collar sliding vent plate assembly.

⚠ WARNING

Major U.S. building codes specify minimum chimney and/or vent height above the roof top. These minimum heights are necessary in the interest of safety. See Figures 11 and 12 for minimum heights, provided the termination cap is at least 2 feet from a vertical wall and 2 feet below a horizontal overhang.

***NOTICE*:** The above warning also pertains to vertical vent systems installed on the outside of the building.

⚠ WARNING

The exhaust pipe must only be connected to the exhaust starting collar of the unit and to the exhaust collar of the termination cap.
The inlet air pipe must only be connected to the inlet air starting collar of the unit and to the inlet air collar of the termination cap. Both the inlet vent and the flue vent must be connected from the insert to the vent termination cap.

***NOTICE*:** The minimum vertical vent rise is 10 feet and the maximum vertical vent rise is 35 feet. These dimensions are measured from the starting collars of the unit to the end of the last section of vent pipe. **See Figure 10.**

***NOTICE*:** The damper of the masonry chimney may need to be removed to install the flexible-vent pipe.
When installing into a zero clearance, factory built wood-burning fireplace, the DVKI2P Round Vertical Termination Kit should allow you to mount the vent adaptor and cap to the exposed round chimney pipe.

NOTICE: The vent cap must be in open, free air. It cannot be installed under an existing cap shared by other flues.

Connect the Vent Pipe & Install the Fireplace Insert

⚠ CAUTION
Sharp edges. Wear gloves when installing.

1. Install the 3-inch flexible vent pipes down through the chimney.
2. Attach the pipe-to-cap adaptor to the termination cap and the top of the flexible vent pipe, then install the cap to the top of the chimney.

⚠ CAUTION
Seal off the area between the termination cap and the top of the solid-fuel chimney opening into which the vent cap is installed to avoid downdrafts and/or cold air problems.

3. Remove the vent slide plate assembly from the top of the insert. **See Figure 9.**

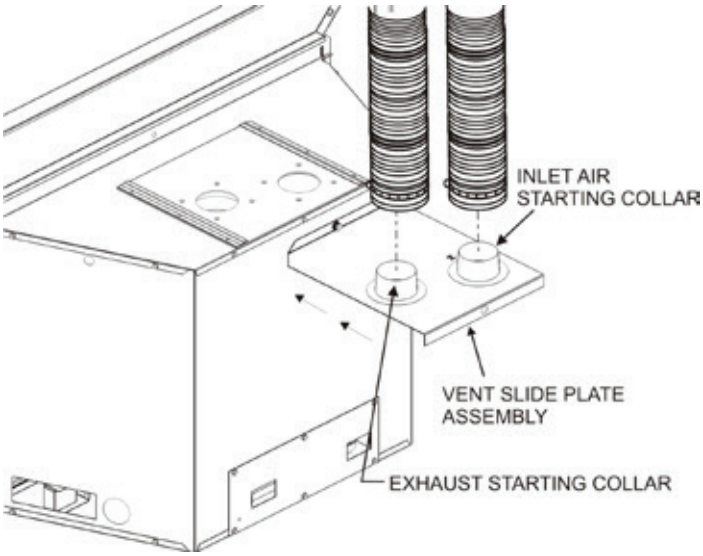

Figure 9

4. Trim off excess venting then attach and secure the bottom ends of the flex pipes to the starting collars with the adjustable band clamps provided.
5. Slide the gas insert into place without the surround panels attached, and position any excess flex vent pipe back up into the chimney. Do not leave an excess of pipe that could cause a restriction in the intake or exhaust system.
6. Make all gas and electrical connections.
7. Align the vent slide plate assembly with the guides located on top of the insert.
8. Work the insert inch by inch into the fireplace cavity as you pull forward on the vent slide plate assembly. Do not use excessive force on the vent slide plate.

***NOTICE*:** The front flanges of the insert (without the surround) should be set at approximately 1-inch) in front of the face of the fireplace.

9. Level the insert from side to side and front to back.
10. If necessary, use the leveling bolts included in the instruction pack. Screw the legs into the nuts installed in the bottom of the insert. Turn legs in until insert is level.
    NOTICE: If desired, attach metal strapping or brackets (not provided) from the fireplace cavity to the insert outer jacket to secure the fireplace insert to the fireplace hearth or opening.
11. Once the fireplace insert is level and the vent slide plate is close to seating, install the black button head 5/16-18 x 2 1/2 inch long bolt through the center hole of the insert top bracket, and into the vent slide plate nut.
12. Use the provided allen wrench to tighten the bolt until the vent slide plate is seated forward completely.
13. Install surround assembly. Refer to instructions included with the surround kit.

NOTICE: All manufacturer supplied surrounds, shrouds, and decorative front options have been tested and are approved for use with the fireplace insert and may cover existing air circulation vents or grills on the solid fuel fireplace it is installed into.
Do not seal the ventilation openings on the insert with trim panels or surrounds.

⚠ WARNING
Only surrounds, shrouds, and decorative front components supplied by the manufacturer may be used to cover integral grills on the solid-fuel burning fireplace. No other components such as sheet metal plates may be used to seal off vents.

INSTALLATION DIAGRAM

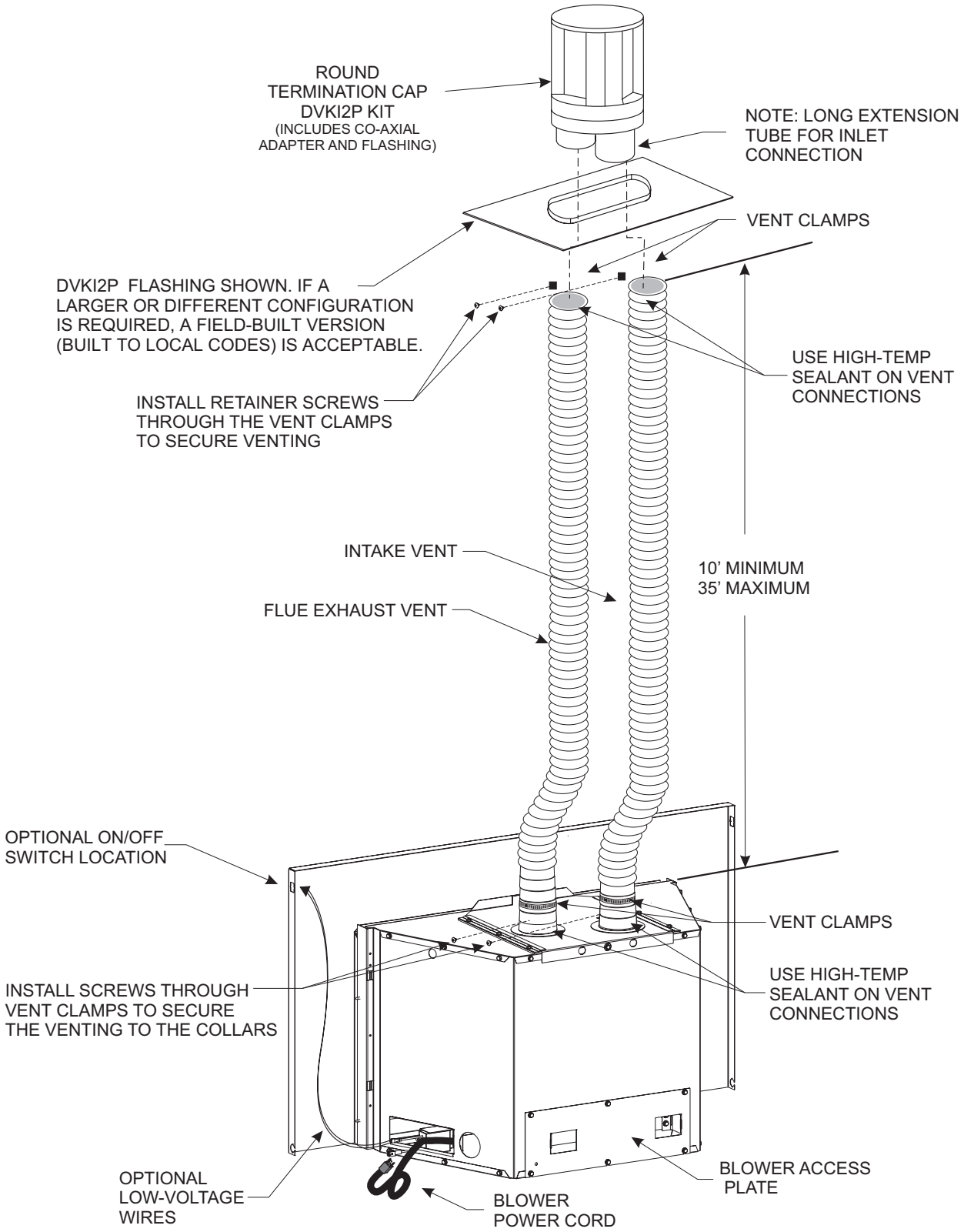

Figure 10

VERTICAL TERMINATION

Determining Minimum Vent Height Above the Roof.

⚠ WARNING

Major U.S. building codes specify minimum chimney height above the roof top. These specifications are summarized in Figure 11.

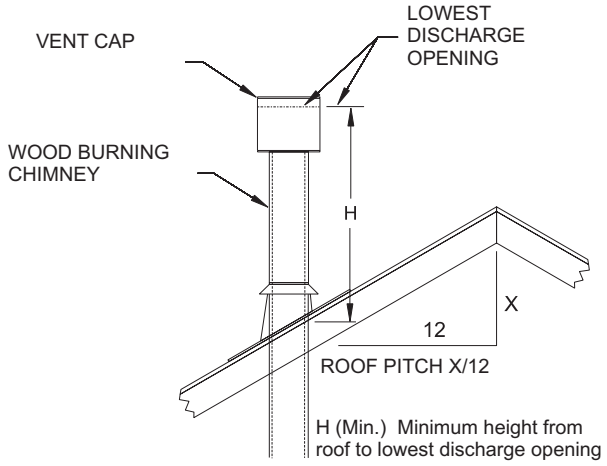

ROOF PITCH	H (Min.) (in inches)
Flat to 6/12	12
6/12 to 7/12	15
Over 7/12 to 8/12	18
Over 8/12 to 16/12	24
Over 16/12 to 21/12	36

Figure 11

NOTICE: For steep roof pitches, the vent height must be increased. In high wind conditions, nearby trees, adjoining roof lines, steep pitched roofs, and other similar factors can result in poor draft, or down-drafting. In these cases, increasing the vent height may solve this problem.

When terminating the vent cap near an exterior wall or overhang, maintain minimum clearances as shown in **Figure 12.**

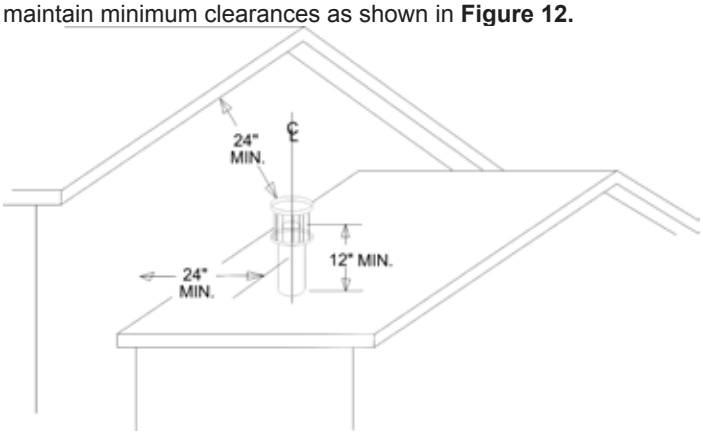

Figure 12

Vertical Applications

The Gas Fireplace Insert has been approved for vertical installations up to 35 feet in height (top of insert to cap).

General Maintenance

Conduct an inspection of the venting system semi-annually. Recommended areas to inspect are as follows:

1. Check areas of the venting system which are exposed to the elements for corrosion. These will appear as rust spots or streaks and, in extreme cases, holes. These components should immediately be replaced.
2. Remove the cap and shine a flashlight down the vent. Remove any bird nests or other foreign material.
3. Check for evidence of excessive condensate, such as water droplets forming in the flex venting and subsequently dripping out at joints or seams. Condensate can cause corrosion of caps, pipe and fittings. It may be caused by having excessive runs, or having exterior portions of the system exposed to cold weather.
4. Inspect joints to verify that no pipe sections or fittings have been disturbed and, consequently, loosened. Check mechanical supports.

Tall Vent Heights

Poor combustion may occur during initial and cold start-ups. Open the flue baffle vent to improve performance. To adjust, rotate the flue baffle vent enough to encourage better draft for improved combustion.

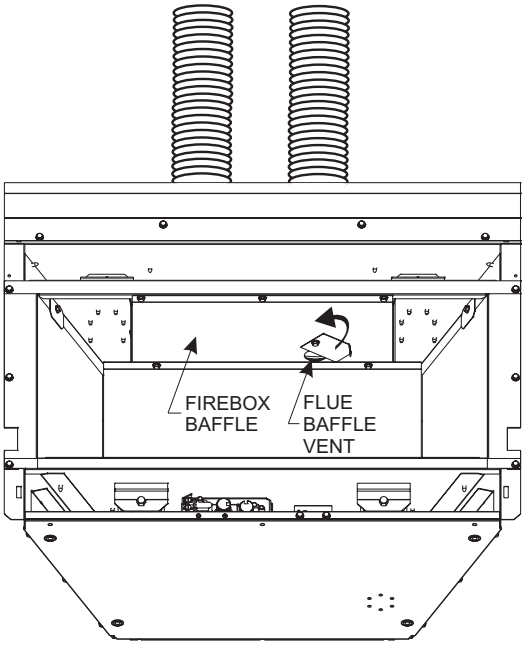

Figure 13

VERTICAL TERMINATION

Optional Inlet Air Restrictor Plate Installation
An optional air restrictor plate is included in the instruction packet. Install the optional air restrictor if the fireplace insert installation requires 20 to 35 feet vertical venting, or is in high-wind area.

1. Remove the barrier screen, glass door, log set and liner panels (if applicable) and set aside.
2. Remove the back log support bracket by removing the two screws securing it to the log support and set aside.
3. Remove the log support by removing the three screws securing it to the firebox back and set aside.
4. Loosen the two bottom screws that secure the inlet air duct collar at the rear of the firebox. **See Figure 14.**
5. Place the inlet air restrictor plate over the air intake opening. Align the plate with the loosened screws, shift the plate on the keyhole slots, then retighten the two screws. See **Figure 14** for locating the inlet air duct opening.
6. Reinstall the back log support and three screws removed in step 3.
7. Reinstall the rear log support bracket and two screws removed in step 2.
8. If applicable, reinstall liner panels, log set, glass door, and barrier screen.

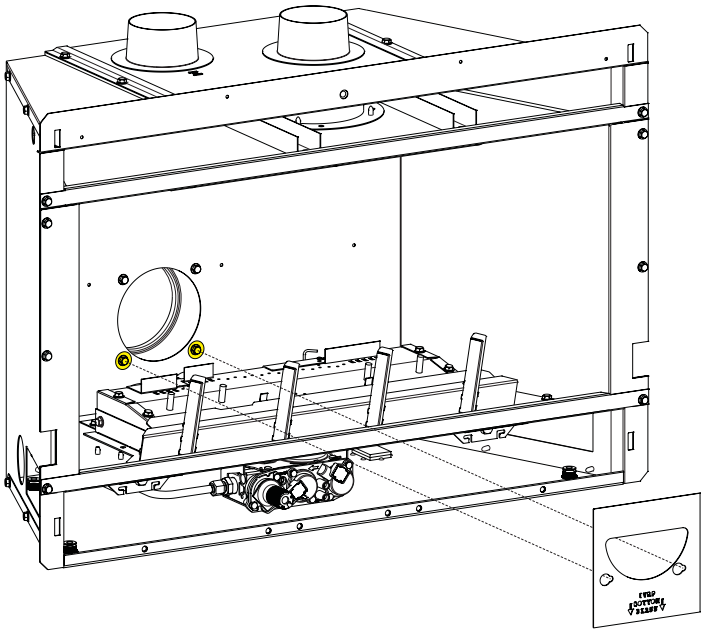

Figure 14

SURROUND INSTALLATION

1. Secure the surround to the fireplace insert flanges with four #8 x 1/2-inch truss head screws (two each side). **See Figure 15.**

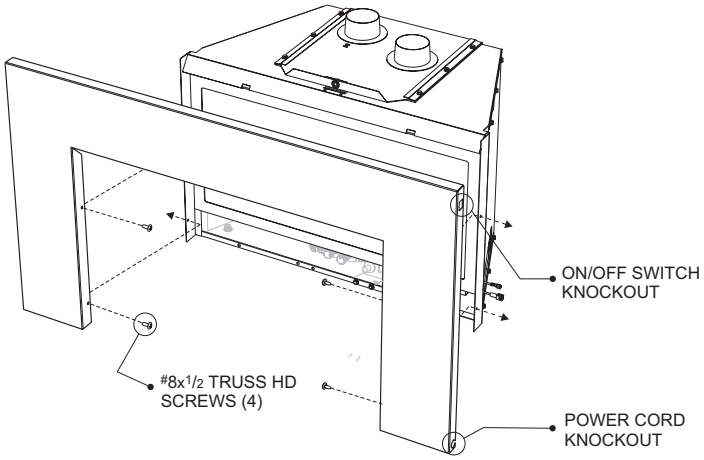

Figure 15

ALTERNATE ON/OFF SWITCH INSTALLATION

WIRING THE FIREPLACE

⚠ CAUTION
Disconnect remote controls if you are absent for extended time periods. This will prevent accidental fireplace operation.

Installation of Alternate Surround Panel ON/OFF Switch
An ON/OFF switch and wire assembly is provided. They are included in the instruction packet.
Do not cut wire or insulation on metal edges.

Contemporary Surrounds

1. Find the coiled low voltage wire assembly and ON/OFF switch located in the instruction packet.
2. **Millivolt Valve** - Attach the flag terminal ends to the "TH/TP" and "TH" terminals on the front terminal block of the gas valve. **See Figure 17.**
   "IP" Valve - Locate the two 5-1/2-inch long black wires connected to the ON/OFF switch. Disconnect these two black wires at the green and white wire connections. Attach the flag terminals (the low voltage wire assembly found in the Instruction Packet) to the green and white wire connections. See Figures 18 and 19.
3. Run the low voltage alternate switch wires to the right or left surround panel. Use the top knockout location. Then secure the wires with wire clips provided. **See Figure 16.**

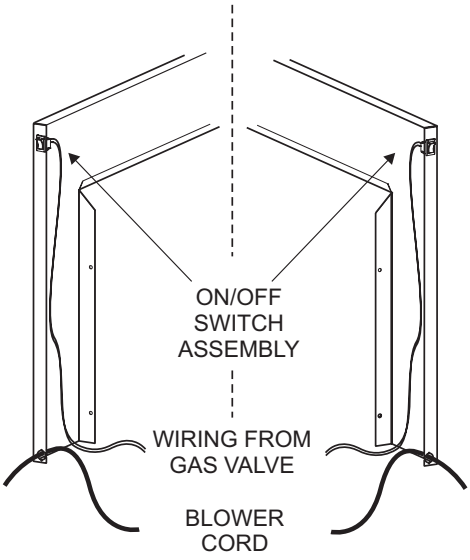

Figure 16

Insert ON/OFF switch into side panel then attach wire assembly from valve terminals.

4. Remove the desired switch knockout on the side surround panel, then install the ON/OFF switch.
5. Connect the low voltage wires from the gas valve to the ON/OFF switch.
   a. For millivolt valve connections, **see Figure 17.**
   b. For IP valve connections, locate the green and white wires from the control module, then connect the switch wire flag terminals to the green and white wire terminals. **See Figures 18 and 19.**

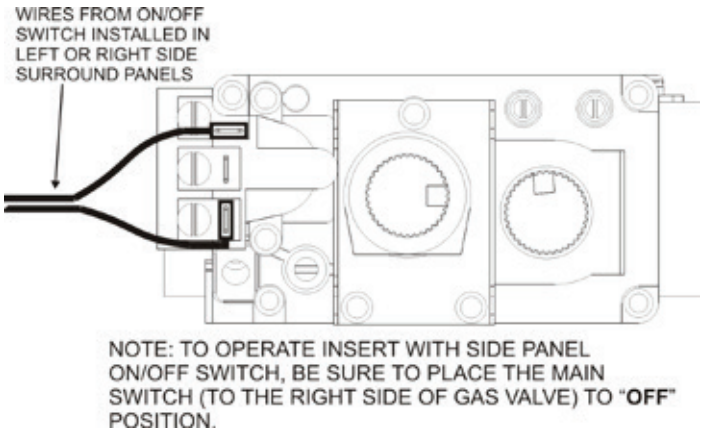

Figure 17

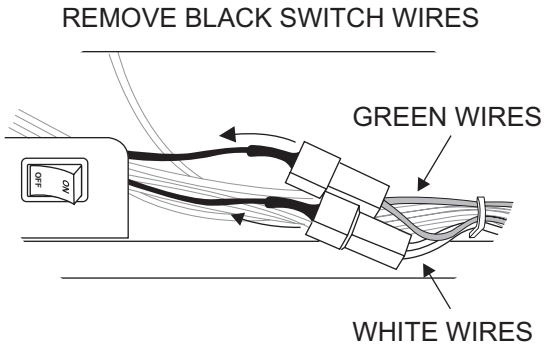

Figure 18

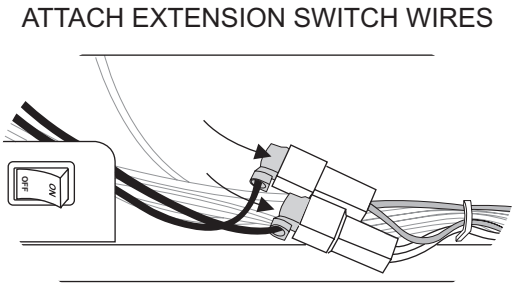

Figure 19

6. Attach the surround assembly to the insert. **See Figure 15** on page 19 and refer to the installation instructions supplied with the surround.

ALTERNATE ON/OFF SWITCH INSTALLATION

Cast Iron Surrounds

Cast Iron Surrounds require a surround adaptor kit. See page 6 for kit information.

1. Find the coiled low voltage wire assembly and ON/OFF switch located in the instruction packet.

2a. Attach the flag terminal ends to the “TH/TP” and “TH” terminals on the front terminal block of the MV gas valve. **See Figure 17.**

2b. Attach the flag terminals to the green and white wire terminals located in the bottom of the insert near the gas valve. **See Figures 18 and 19.**

3. Run the low voltage alternate switch wires up the back of the right or left cast surround leg. Then secure them with the wire clips provided.
4. Install the switch bracket with screws as shown in **Figure 20** to the back of the cast surround leg.

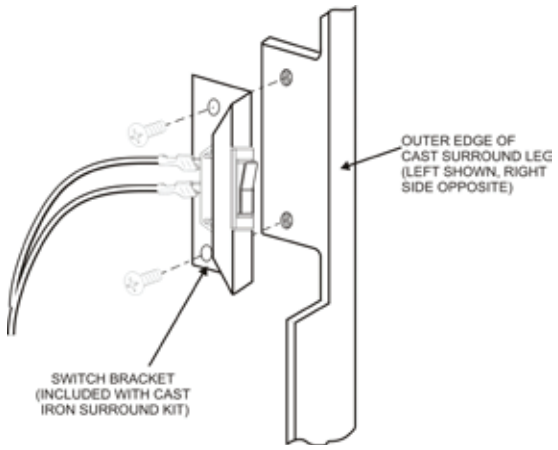

Figure 20

***NOTICE*: For right side leg installation, reverse switch position in bracket.**

5. Install ON/OFF switch, and connect low-voltage wires from gas valve (MV) or control module (IP).
6. Attach cast surround panel assembly to the insert. Place the cast surround assembly to the face of the insert. Align the inside brackets on the cast surround with the flanges on the insert. Install four #8 x 1/2 truss head sheet metal screws to secure the surround.

BARRIER SCREEN INSTALLATION

NOTE: Do not handle barrier screen or door assembly with your bare hands! (Always Wear Gloves)

1. Grasp and hold the barrier screen assembly at an angle as shown in Figure 21. Insert the top of the barrier between the surround and fireplace insert top frame.

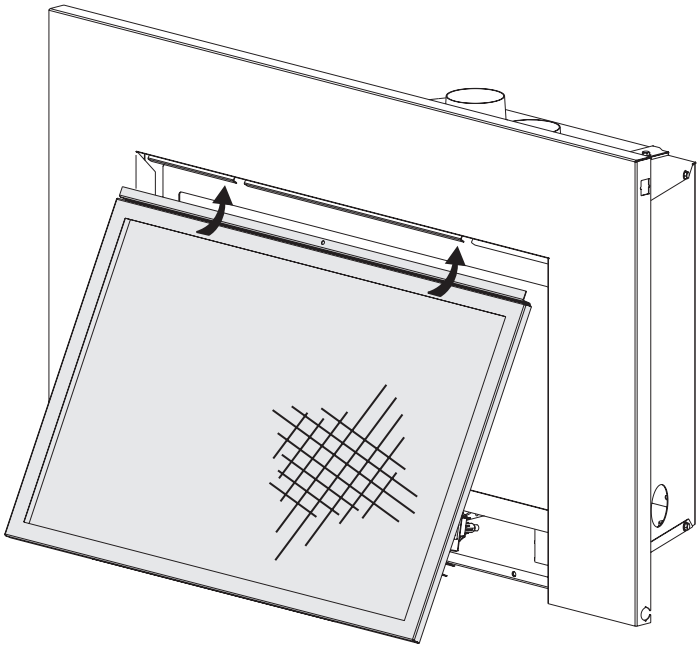

Figure 21

2. Raise the barrier just enough to allow the bottom of the barrier to swing inward to a vertical position. **See Figure 22.**

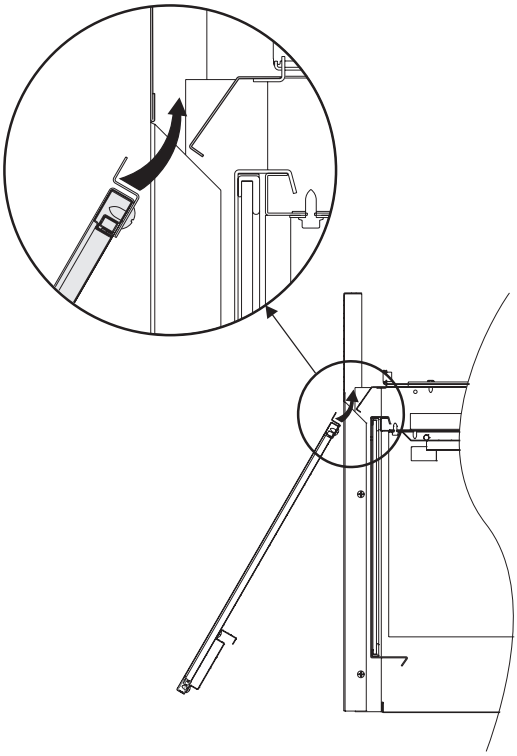

Figure 22

3. Once the lower return flange on the back of the barrier is place against the glass door fame, gently lift the barrier screen up about 3/8 of an inch, push inward on the barrier, then release and lock the lower return flange between the door glass and lower door frame. **See Figure 23.**

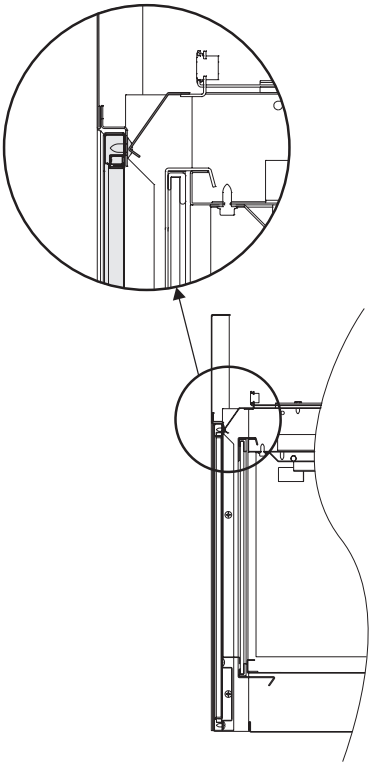

Figure 23

BLOWER INFORMATION

The appliance, when installed must be electrically connected and grounded in accordance with local codes or, in the absence of local codes, with the current CSA C22.1 Canadian Electrical Code.

U.S. Installations, follow local codes and the National Electrical Code, ANSI/NFPA No. 70.

Should this blower require servicing, the power supply must be disconnected. For rewiring of any replacement components, refer to Figures 24 and 25.

Operation

The fireplace insert is equipped with a factory installed blower that includes a fan control switch, plus a rheostat (speed control). The speed control knob is located in the lower compartment, at the right side of the insert.

From a cold start, the temperature activated fan control switch will normally take 5 to 20 minutes to heat up and energize the blower.

Once the blower is energized, adjust the blower speed control as desired, then replace the lower louver.

When the insert is shut off, it may take 30 to 40 minutes for the heated unit to dissipate (cool down) enough for the blower to shut off automatically.

NOTICE: The blower shut off times will vary on blower speed and BTU input level setting control by adjustment of the HI/LO knob located on the gas valve.

Blower removal instructions

Servicing or removal of the blower system must be performed by a qualified service person.

If the blower assembly must be replaced, the following steps are recommended for removal:

1. Turn off gas and disconnect the electrical supply.
2. Remove the barrier and glass door assembly.
3. Remove the log set.
4. Remove the front surround panel assembly.
5. Remove the 5/16 x 2-1/2 inch center bolt that retains the Vent Slide plate assembly.
6. Remove the insert from the fireplace cavity by pulling forward on the insert, and at the same time, slide the vent plate rearward until disengaged.
7. As the insert is moved outward, the gas line may need to be disconnected at the insert shut off valve. If so, make sure the main gas line is shut off that supplies gas to the insert.
8. Once the insert is pulled out, the blower assembly can be removed by locating the six screws on the lower back of the insert that retains the blower base plate.
9. When the screws are removed, gently pull the blower assembly outward.
10. Disconnect the two ¼-inch wire terminals from the motor.
11. Remove the four screws that retain the blower assembly to the mounting plate, and set blower aside.
12. Install the replacement blower, and re-install into the insert by reversing the above steps.

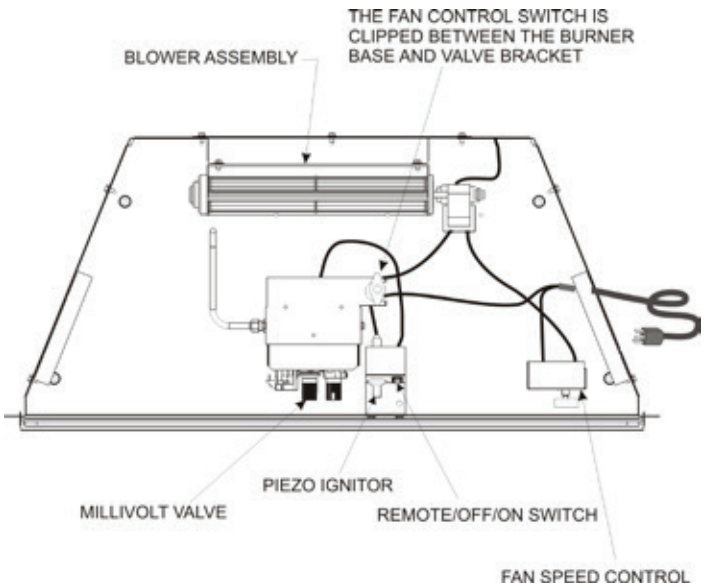

Figure 24

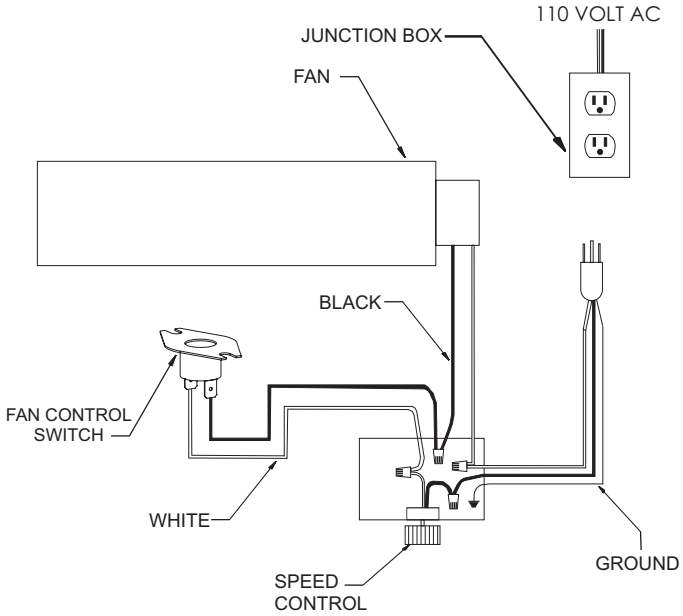

Figure 25

LOG IDENTIFICATION

Log Description	Part Number		Front View	Top View
	DVC20IN	DVC(26,28)IN		
Log A	36934	36938		
Log B	36557	36559		
Log C	36556	36558		
Log D	36936	36936		
Log E	36935	36939		

LOG PLACEMENT

Before you begin: This fireplace insert is supplied with a set of five ceramic fiber logs. Do not handle these logs with your bare hands. Always wear gloves to prevent skin irritation from ceramic fibers. After handling logs, wash your hands gently with soap and water to remove any traces of fiber.

The positioning of logs is critical to safe and clean operation of this fireplace. Sooting and other problems may result if the logs are not properly and firmly positioned in the fireplace.

Refer to **Figure 26 and 27** and corresponding WARNING when completing following log placement steps.

1. Remove the barrier screen. Press in and up at the top of the barrier frame. Lift the barrier screen assembly up approximately 3/8 inch until the bottom bracket is free from the bottom of the glass door frame. Swing the bottom of the barrier toward you until the barrier can be removed from the top opening, which is the space between the surround and insert top.
2. Release two glass frame spring clamps at bottom of the glass door assembly.
3. Swing the bottom of the glass door outward approximately 10-15 degrees, then grasping the edges, gently lift upward to remove the door assembly, and set aside.
4. Remove the foam packaging that contains the log set from inside the firebox.
5. Carefully unpack the logs. Spread them out for easy identification.

***NOTICE*: Continue to pages 26 - 31 for step by step instructions with images.**

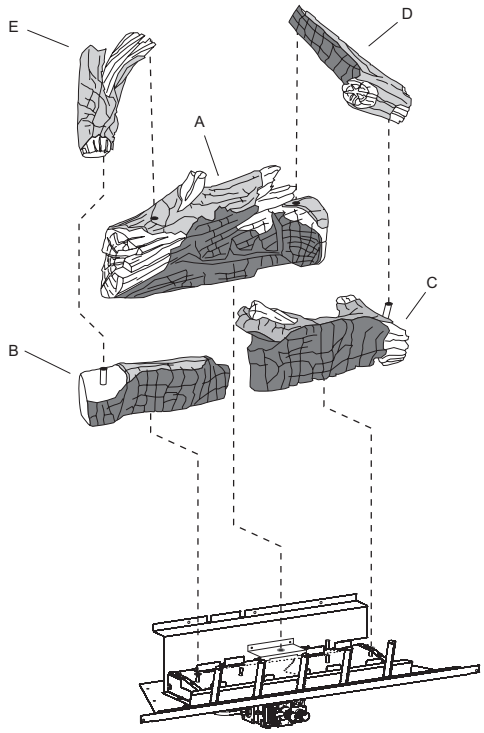

Figure 26

⚠ WARNING

Failure to position the parts in accordance with this diagram or failure to use only parts specifically approved with this appliance may result in property damage or personal injury.

Figure 27

⚠ CAUTION

Decorative Rock is not included with the Fireplace Insert, however it may be purchased separately and placed only on the firebox floor. Do Not place decorative rock or rock wool on the logs or burner assembly.

LOG PLACEMENT

1. Install Log A. It will be centered left to right and placed all the way to the back of the firebox, on top of the rear log support.
   NOTICE: DVC20IN models incorporate two small tabs in the rear log support that keep the back log positioned correctly. DVC26IN models have one small tab in the rear log support to ensure the back log is in the correct position. The DVC28IN models will have two tabs bent forward in the rear log support to ensure proper left to right positioning of the log, plus one small tab near the center that keeps the back log from shifting forward. See image below.

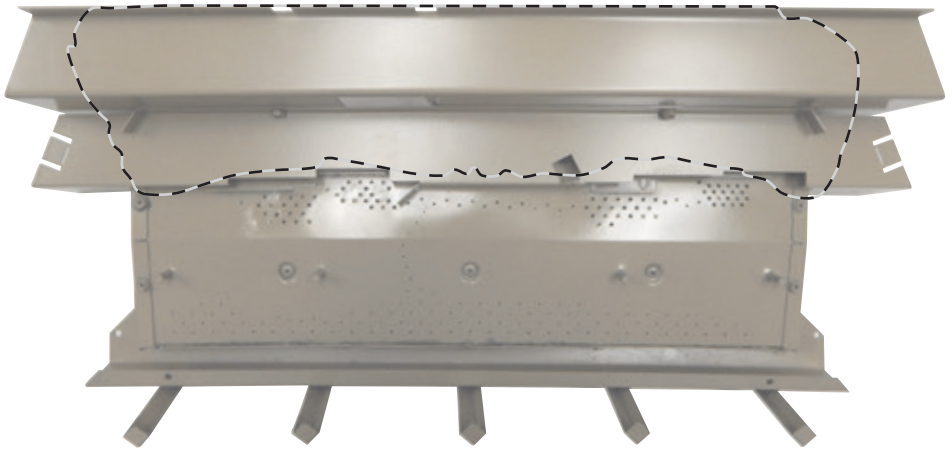

Top View

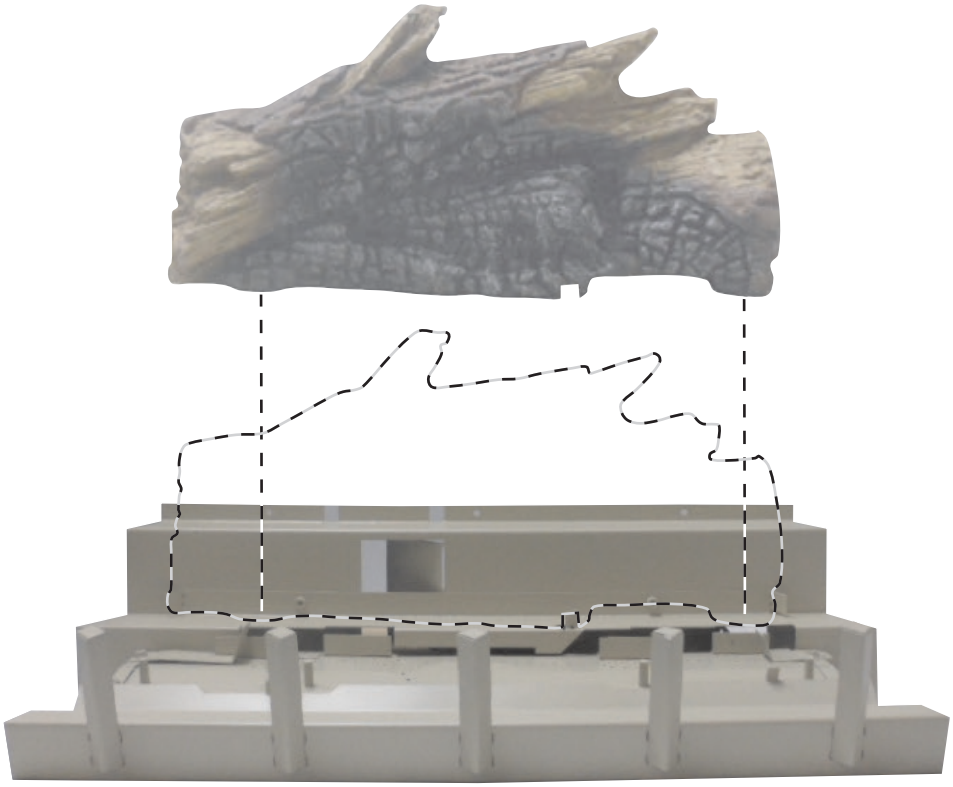

Front View

LOG PLACEMENT

2. Locate Log B. It will have two locator pin holes on the bottom flat surface. Align the two holes with the two left pins on the burner assembly. Make sure this log is not raised up off of the burner. The flat bottom surface must be completely resting flat on the top of the burner surface. See image below.

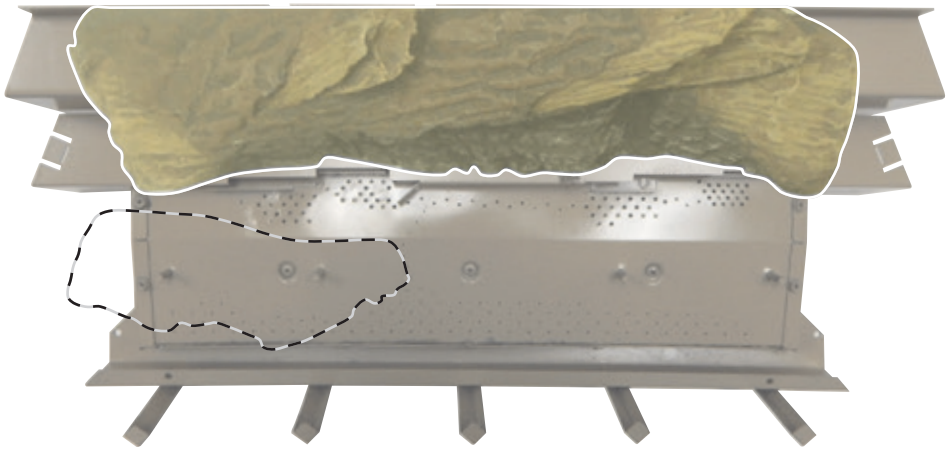

Top View

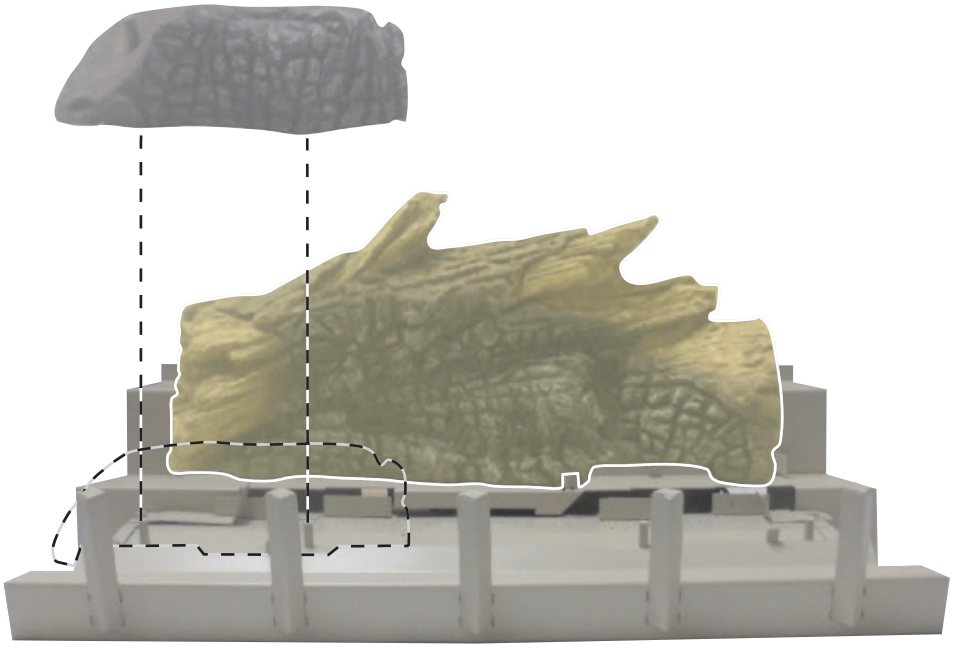

Front View

LOG PLACEMENT

3. Install Log C. It will also have two locator pin holes on the bottom flat surface. Align these two holes with the two right pins on the burner assembly. Make sure this log is not raised up off of the burner. The flat bottom surface must be completely resting flat on the top of the burner surface. See image below.

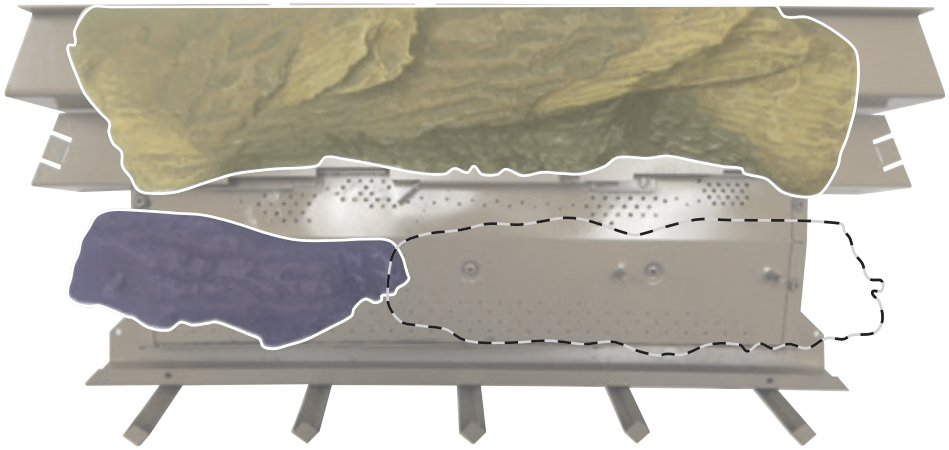

Top View

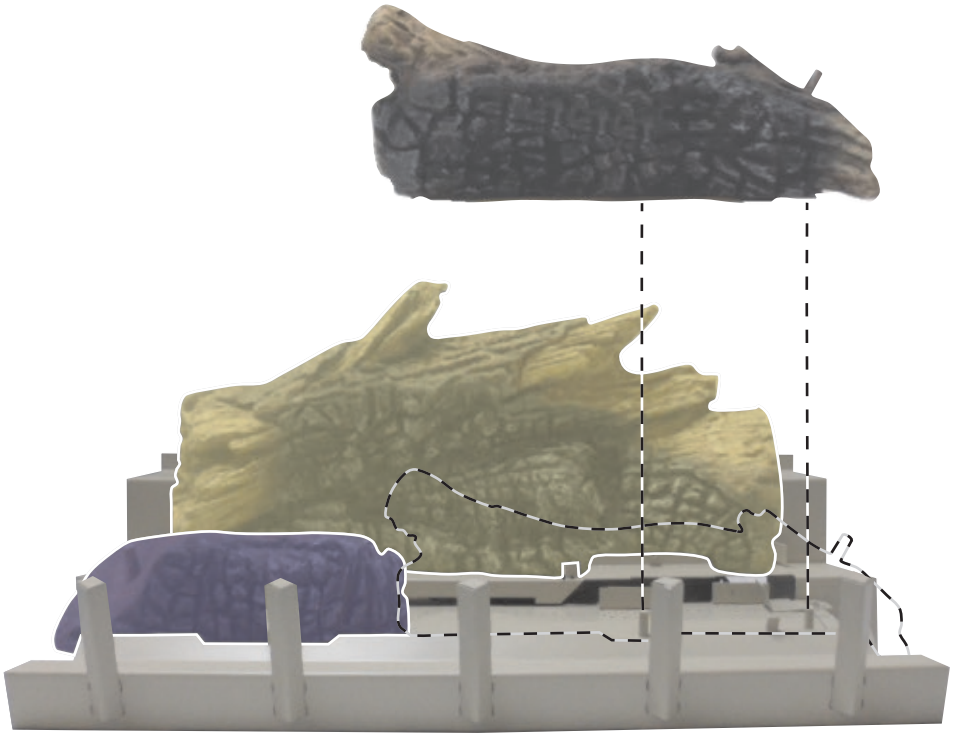

Front View

LOG PLACEMENT

4. Add Log D by placing the locator pin hole on the bottom of the twig with the pin on top of the center right log. The tip of Log D will rest on top of Log A near the right end. See image below.

Top View

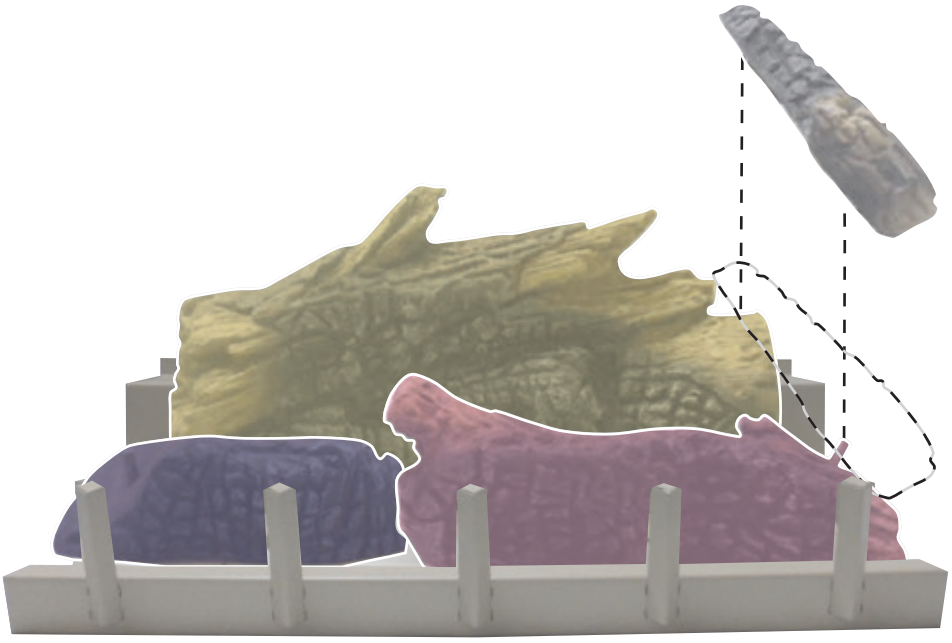

Front View

LOG PLACEMENT

5. Add Log E by placing the locator pin hole on the bottom of the log with the pin on top of Log A. The long branch of Log E will rest in a small groove on top of Log A. ***NOTICE***: The flat side of the log will face the left side. This groove is near the left end of Log A. See image below.

Top View

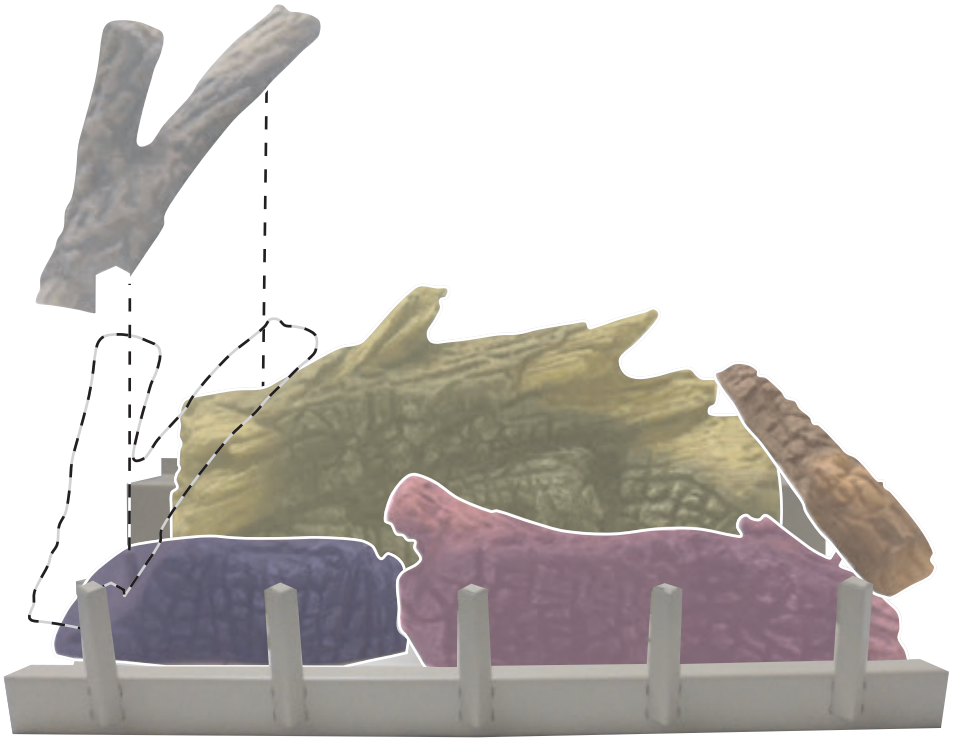

Front View

LOG PLACEMENT

8. The log assembly is complete.
9. Replace the glass door assembly onto the fireplace insert.
10. Secure the glass door with the two spring clamps located under the firebox.
11. Replace the barrier screen assembly.

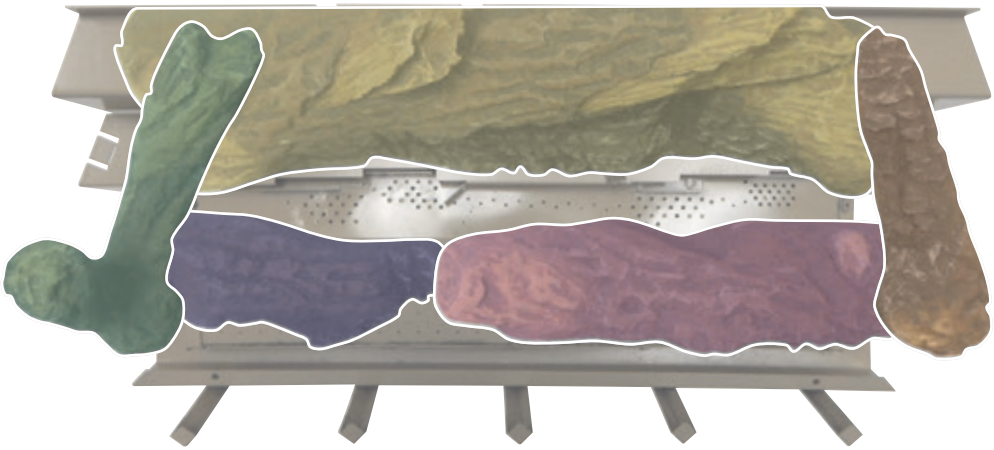

Top View

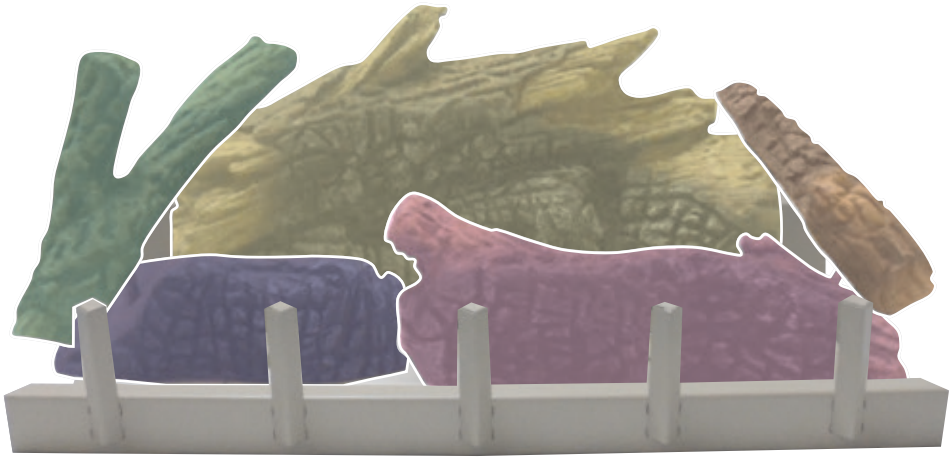

Front View

PLACEMENT OF GLOWING EMBERS AND OPTIONAL LAVA ROCK

Placement of the glowing embers is for a glowing effect based on the look you desire.
Place just enough glowing embers on the burner to obtain an “ember glow” and a golden-yellow flame. Place glowing embers in the shaded areas shown in Figure 28.

- Do not place glowing embers over large ports in rear portion of burner.
- Do not place glowing embers in the area of the pilot assembly.

⚠ WARNING

Do not use more glowing embers than supplied with the burner. Excessive glowing embers may cause sooting and property damage.

⚠ WARNING

All previously applied loose material must be removed prior to reapplication.

Replacement glowing embers must be purchased from a dealer of Empire Comfort Systems.
Refer to Parts List on page 47 to order glowing embers.

Placing Optional Lava Rock in Front of Burner on Fireplace Floor

Spread lava rocks on fireplace floor in front of the burner pan. The lava rocks are for decorative effect and are not required for fireplace operation.

⚠ WARNING

Do not place lava rocks on burner, logs or glowing embers. Place the lava rocks on the fireplace floor only.

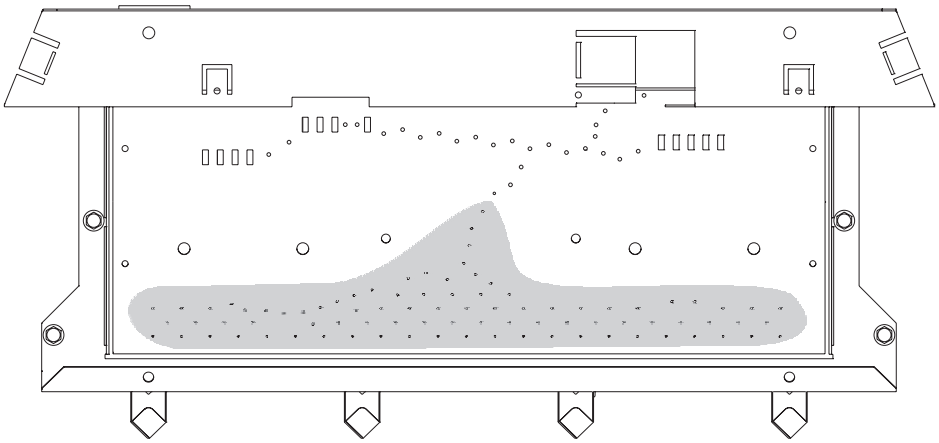

Ember Placement - DVC20IN Fireplace Insert Models

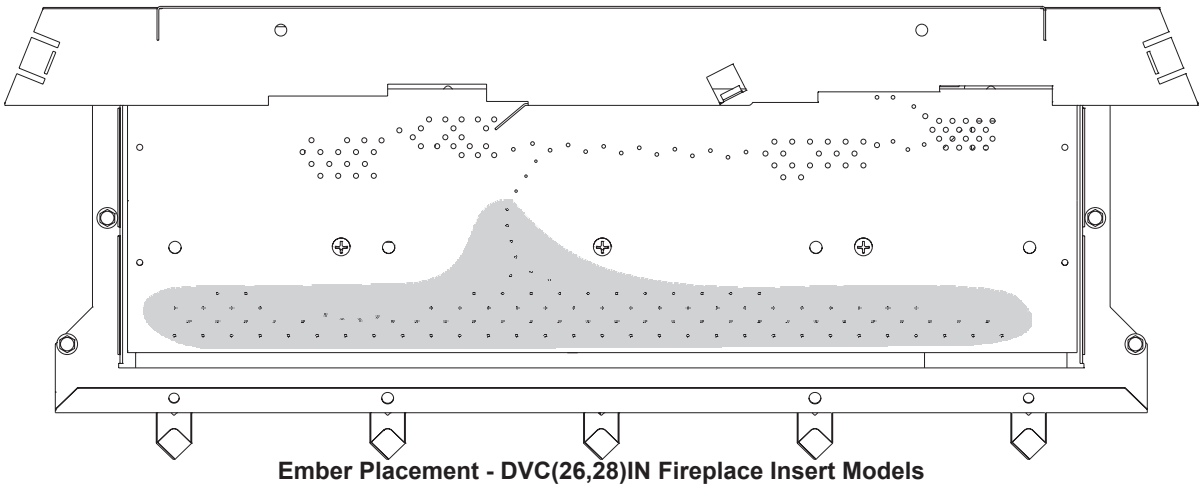

Ember Placement - DVC(26,28)IN Fireplace Insert Models

Figure 28

OPERATING INSTRUCTIONS

750 Millivolt System
The standing pilot (750 millivolt system) is a continuous burning pilot. The pilot remains ON even when the main burner is OFF.

When you ignite the pilot, the thermopile produces millivolts (electrical current) which energizes the magnet in the gas valve. After 30 seconds to 1 minute time period you can release the gas control knob and the pilot will stay ON. Allow your pilot flame to operate an additional one to two minutes before you turn the gas control knob from the PILOT position to the ON position. This time period allows the millivolts (electrical current) to build-up to a sufficient level allowing the gas control to operate properly.

1. Follow the SAFETY and LIGHTING INSTRUCTIONS for standing pilot controls found in this manual and on labels found in control compartment behind the door assembly.

⚠ WARNING

During the initial purging and subsequent lightings, never allow the gas valve control knob to remain depressed in the “pilot” position without pushing the piezo ignitor button at least once every second.

2. During the operating season, leave the control valve knob in the “ON” position. This will allow the pilot flame to remain lit. Turn the burner flame on or off with the fireplace REMOTE/ OFF/ON switch, wall switch or remote controls.

***NOTICE*:** The gas control valve allows you to increase or decrease the height of the main burner flame. The control valve has a pressure regulator with a knob as shown in **Figure 29**. Rotate the knob clockwise to “HI” to increase the flame height and counterclockwise to “LO” to decrease the flame height.

3. When the operating season is over, turn the REMOTE/OFF/ ON switch to “OFF” and the control valve to “OFF”. The system, including the pilot light, will be shut down.

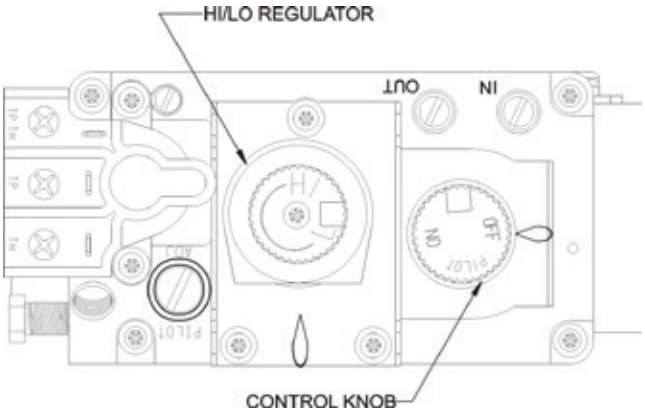

Figure 29

The OWNER should carefully read and follow these operating instructions at all times. Remove the barrier to view the gas controls for the fireplace insert.

Initial Lighting
Upon completing the gas line or turning the gas valve on after it has been in the “OFF” position, a small amount of air will be in the lines. When first lighting the fireplace insert, it will take a few minutes for the lines to purge themselves of this air. Once the purging is complete, the fireplace will light and operate satisfactorily.

Subsequent lightings of the appliance will not require such purging if the gas valve is not turned to “OFF.”

Pilot Flame
The thermopile/thermocouple (standing pilot) tips should be surrounded with flame.

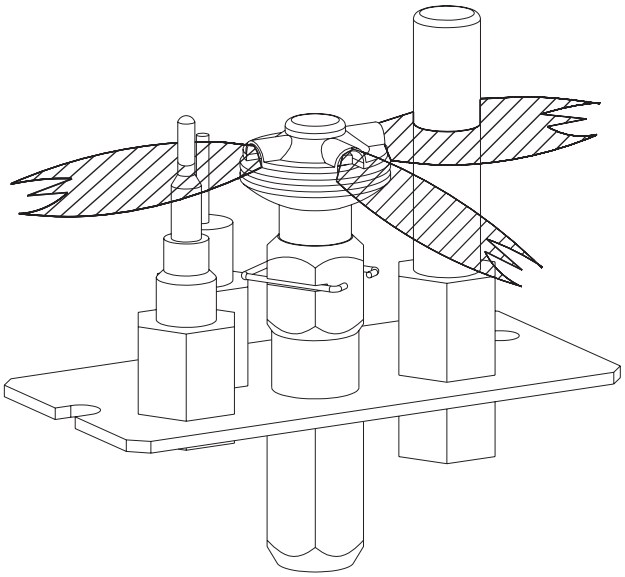
Figure 30

Initial Startup
During the initial installation and startup, turn the unit on and run for 30 to 50 minutes to burn off excessive oils and cure painted surfaces.

Turn fireplace insert off and allow it to cool. Once cool, gently clean off the pilot and flame sensors with a clean, dry cloth.

STANDING PILOT LIGHTING INSTRUCTIONS

FOR YOUR SAFETY READ BEFORE LIGHTING

⚠ WARNING: If you do not follow these instructions exactly, a fire or explosion may result causing property damage, personal injury or loss of life.

A. This appliance has a pilot which must be lighted by hand. When lighting the pilot, follow these instructions exactly.

B. Before lighting smell all around the appliance area for gas. Be sure to smell next to the floor because some gas is heavier than air and will settle on the floor.

What To Do If You Smell Gas
- Do not try to light any appliance.
- Do not touch any electrical switch;
- Do not use any phone in your building.
- Immediately call your gas supplier from a neighbor's phone. Follow the gas supplier's instructions.
- If you cannot reach your gas supplier, call the fire department.

C. Use only your hand to push in or turn the gas control knob. Never use tools. If the knob will not push in or turn by hand, don't try to force it; call a qualified service technician. Force or attempted repair may result in a fire or explosion.

D. Do not use this appliance if any part has been under water. Immediately call a qualified service technician to inspect the appliance and to replace any part of the control system and any gas control which has been under water.

LIGHTING INSTRUCTIONS

1. Stop! Read the safety information above.
2. Set REMOTE/OFF/ON switch to OFF.
3. Turn off all electric power to the appliance (if applicable).
4. Remove barrier assembly.
5. Push in gas control knob slightly and turn clockwise ↷ to “OFF.”

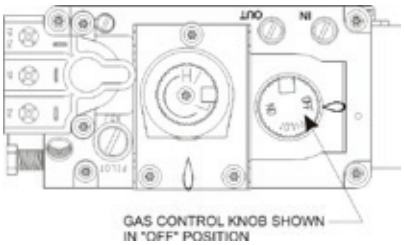

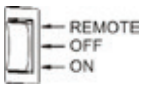

NOTICE: Knob cannot be turned from “PILOT” to “OFF” unless knob is pushed in slightly. Do not force.

6. Wait ten (10) minutes to clear out any gas. Then smell for gas, including near the floor. If you then smell gas, STOP! Follow “B” in the safety information above. If you do not smell gas, go to the next step.
7. Find pilot - Follow metal tube from gas control. The pilot is behind the burner on the right side.
8. Turn gas control knob counterclockwise ↶ to “PILOT.”

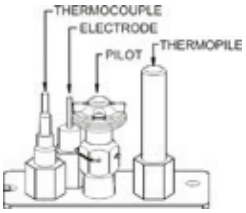

9. Push in control knob all the way and hold in. Repeatedly push the piezo ignitor button until the pilot is lit. Continue to hold the control knob in the for about one (1) minute after the pilot is lit. Release knob, and it will pop back up. Pilot should remain lit. If it goes out, repeat steps 5 through 9.
   - If the control knob does not pop up when released, STOP and IMMEDIATELY call a qualified service technician or gas supplier.
   - If the pilot will not stay lit after several tries, turn the gas control knob to “OFF” and call your service technician or gas supplier.
10. Turn gas control knob counterclockwise ↶ to “ON.”
11. Replace barrier assembly.
12. Turn on all electric power to the appliance (if applicable).
13. Set REMOTE/OFF/ON switch to desired setting.

TO TURN OFF GAS TO FIREPLACE

1. Set REMOTE/OFF/ON switch to OFF.
2. Turn off all electric power to the appliance if service is to be performed (if applicable).
3. Remove the barrier assembly to gain access to the control compartment.
4. Push in gas control knob slightly and turn clockwise ↷ to “OFF.” Do not force.
5. Replace the barrier assembly.

STANDING PILOT WIRING

For Standing Pilot Ignition Wiring: Appliance Requirements

⚠ WARNING

Do not connect 110-120 V/AC to the gas control valve or the appliance will malfunction and the valve will be destroyed.

Optional Wall Switch

Position the wall switch in the desired position on a wall. Run a maximum of 25 feet (7.8m) or less length of 18 A.W.G. minimum wire and connect it to the fireplace valve pigtails.

⚠ WARNING

Do not connect the 110-120 V/AC to the wall to the switch or the control valve will be destroyed.

⚠ CAUTION

Label all wires prior to disconnection when servicing controls. Wiring errors can cause improper and dangerous operation.

⚠ WARNING

Electrical Grounding Instructions

This appliance is equipped with a three-prong (grounding) plug for your protection against shock hazard and should be plugged directly into a properly grounded three-prong receptacle. Do not cut or remove the grounding prong from this plug.

Verify proper operation after servicing.

STANDING PILOT WIRING DIAGRAM

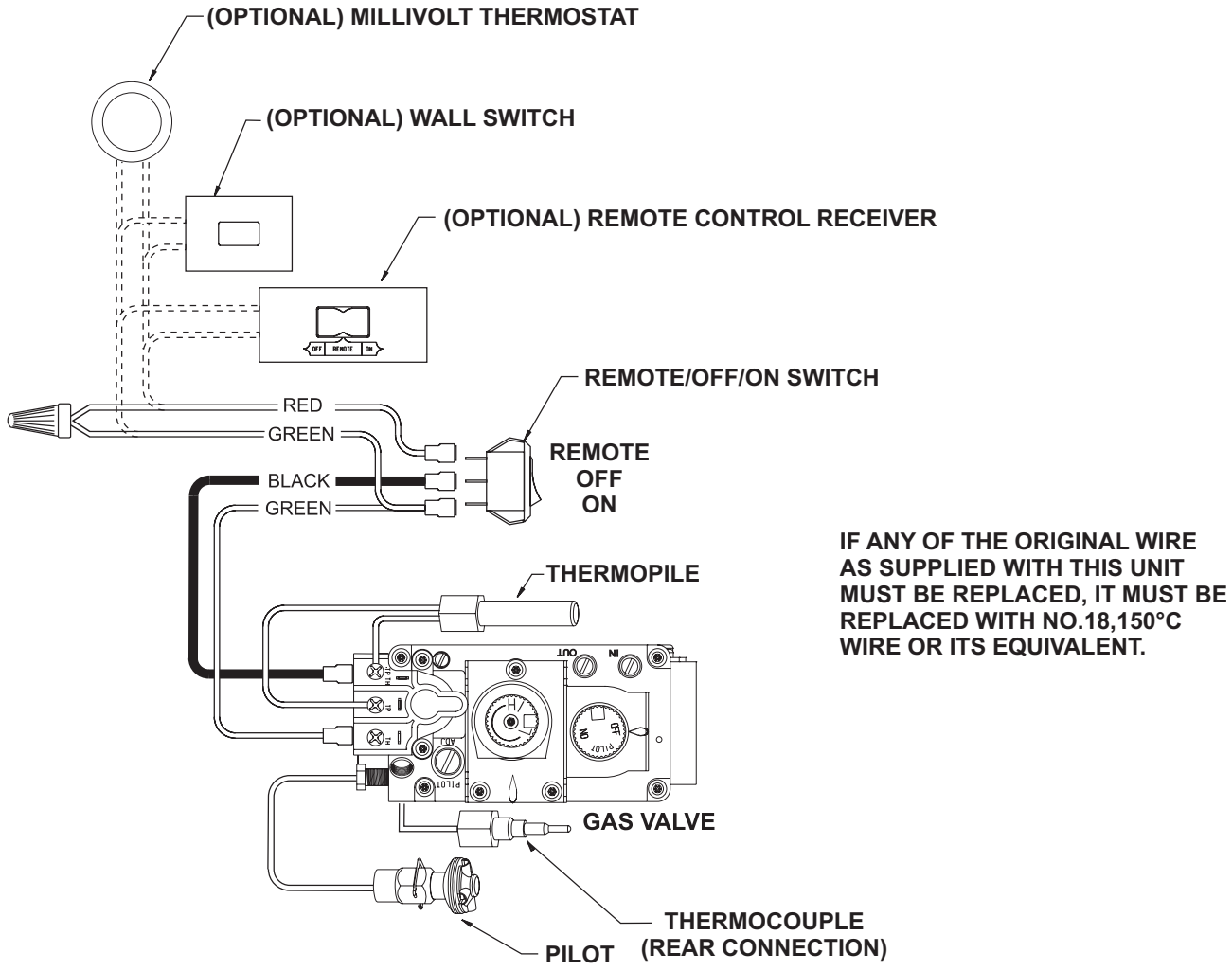

Figure 31

STANDING PILOT TROUBLESHOOTING

With proper installation and maintenance, your new Direct Vent Gas Fireplace will provide years of trouble-free service. If you do experience a problem, refer to the Trouble Shooting Guide below. This guide will assist a qualified service person in the diagnosis of problems and the corrective action to be taken.

1. **Spark ignitor will not light pilot after repeated triggering of piezo ignitor button.**
   a. Defective ignitor (no spark electrode)
   —Check for spark at electrode and pilot; if no spark and electrode wire is properly connected, replace ignitor.
   b. No gas or low gas pressure.
   —Check remote shut off valves from fireplace. Usually there is a valve near the main. There can be more than one (1) valve between the fireplace and main.
   —Low pressure can be caused by a variety of situations such as a bent line, too narrow diameter of pipe, or low line pressure. Consult with plumber or gas supplier.
   c. No Propane in tank.
   —Check LP (propane) tank. Refill tank.
2. **Pilot will not stay lit after carefully following lighting instructions.**
   a. Defective thermocouple.
   —Check that pilot flame impinges on thermocouple. Clean and/or adjust pilot for maximum flame impingement.
   —Ensure the thermocouple connection at the gas valve is fully inserted and tight (hand tight plus 1/4 turn). Faulty thermocouple if reading is below specified minimum of 15 millivolts.
   —Disconnect the thermocouple from the valve, place one millivolt meter lead wire on the end of the thermocouple and the other millivolt meter lead wire on the thermocouple copper wire. Start the pilot and hold the valve knob in. If the millivolt reading is less than 15 millivolt, replace the thermocouple.
   b. Defective valve.
   —If thermocouple is producing more than 15 millivolts, replace faulty valve.
3. **Pilot burning, no gas to burner, valve knob "ON", REMOTE/OFF/ON switch "ON."**
   a. REMOTE/OFF/ON switch, wall switch, remote control or wires defective.
   —Check REMOTE/OFF/ON switch and wires for proper connections. Place jumper wires across terminal at switch. If burner comes on, replace defective switch. If OK, place jumper wires across switch wires at gas valve-if burner comes on, wires are faulty or connections are bad.
   b. Thermopile may not be generating sufficient millivolts.
   —If the pilot flame is not close enough physically to the thermopile, adjust the pilot flame.
   —Be sure the wire connections from the thermopile at the gas valve terminals are tight and the thermopile is fully inserted into the pilot bracket.
   —Check the thermopile with a millivolt meter. Take the reading at TH-TP & TP terminals of the gas valve. The meter should read 350 millivolts minimum, while holding the valve knob depressed in the PILOT position, with the pilot lit, and the REMOTE/OFF/ON switch in the OFF position. Replace the faulty thermopile if the reading is below the specified minimum.
   —With the pilot in the ON position, disconnect the thermopile leads from the valve. Take a reading at the thermopile leads. The reading should be 350 millivolts minimum. Replace the thermopile if the reading is below the minimum.
   c. Defective valve.
   —Turn valve knob to ON. Place REMOTE/OFF/ON switch to ON. Check with millivolt meter at thermopile terminals. Millivolt meter should read greater than 200 millivolts. If the reading is okay and the main burner does not ignite, replace the gas valve.
   d. Plugged main burner orifice.
   —Check main burner orifice for blockage and remove.
4. **Frequent pilot outage problem.**
   a. Pilot flame may be too high or too low, or blowing (high), causing pilot safety to drop out.
   —Clean and adjust flame for maximum flame impingement on the thermocouple. Follow lighting instructions carefully.
5. **The pilot and main burner extinguish while in operation.**
   a. No LP (Propane) in tank.
   Check LP (Propane) tank. Refill fuel tank.
   b. Vent pipe leaking exhaust gases back into system.
   —Check for leaks.
   c. Glass too loose, gasket leaks in corners after usage.
   —Be certain glass assembly is installed correctly.
   d. Bad thermopile or thermocouple.
   —Replace if necessary.
   e. Improper vent cap installation.
   —Check for proper installation and freedom from debris or blockage.
6. **Glass soots, and/or soot deposits collected on logs.**
   a. Flame impingement on logs incorrect.
   —Check and adjust log position. See Page 25. Contact Empire Comfort Systems, Inc.
   b. Debris around throat of main burner.
   —Inspect the opening at the base of the main burner. It is imperative that NO material be placed in this opening.
   c. Glass door is not properly sealed. Verify that the seal is seated to the firebox face. The seal must be even and the door centered. Both spring clamps must be properly latched.
   d. Check air shutter setting. See Specifications, page 5.
7. **Flame burns blue and lifts off main burner.**
   a. Insufficient oxygen being supplied.
   —Check to make sure vent cap is installed properly and free of debris. Make sure that vent system joints are tight and have no leaks.
   —Check to make sure that no material has been placed at the main burner base.

5.25 VDC ELECTRONIC CONTROL VALVE

The electronic control valve system includes the ability to switch the pilot from a standing pilot mode to an intermittent pilot mode.

- **IPI Mode** - In the Intermittent Pilot mode, when the unit is turned ON, it will cause spark to the pilot, light the pilot, then allow the burner to light. When the unit is turned to OFF, both the burner and pilot will be OFF.
- **CPI Mode** - In the Continuous Pilot mode, the pilot remains ON continuously even when the burner is turned OFF.

NOTICE: A small toggle switch is located on the front of the module tray that is used to switch from IPI (left position) to the CPI (right position). **See Figure 32.**

When the unit is turned to ON, the electrical current will energize a spark to the pilot igniter. Once the pilot sensor heats up (after a few seconds), the valve will be energized, allowing gas to flow to the burner.

AC/DC Adapter

An AC/DC adapter is located in the Instruction Packet. To install, connect the adapter to the mating female connector located near the gas valve. Run the adapter plug out one of the side openings of the insert in a similar manner as the blower power cord, then plug the adapter into a 120V receptacle.

1. Follow the SAFETY and LIGHTING INSTRUCTIONS for Intermittent Pilot controls found in this manual, and on labels found in the control compartment located in the lower cavity of the appliance.
2. During the operating season (or in power outage periods), it is recommended that the pilot remain in the CPI (standing pilot mode) to reduce cold start issues, and/or conserve battery backup power during a power outage.
3. The gas valve has inlet and outlet pressure taps as shown in Figure 32. Refer to pages 5 and 12 to 13 for gas pressure requirements.

***NOTICE*:** The gas control has a manual HI/LO flame adjustment knob (regulator) that allows you to increase or decrease the height of the burner flame. See Figure 32. Rotate the HI/LO knob counterclockwise to “HI” to increase the flame height, and clockwise to “LO” to decrease the flame height.

OPTIONAL REMOTE CONTROLS

Optional remote controls are available for use with this appliance. Place the remote receiver either in a wall outlet box with extended wiring, on the fireplace hearth, behind the left side surround panel, or in the control compartment area as far forward in the insert as possible.

The placement options for the remote receiver are given to allow flexibility however, battery life will be extended if the receiver is placed in cooler areas.

To connect the remote receiver to the appliance, first disconnect the ON/OFF switch wires from the white and green wire connectors and connect the wires from the remote receiver to the green and white wire connectors. See Page 38.

Follow the instructions included with the remote control for programming and other operational information.

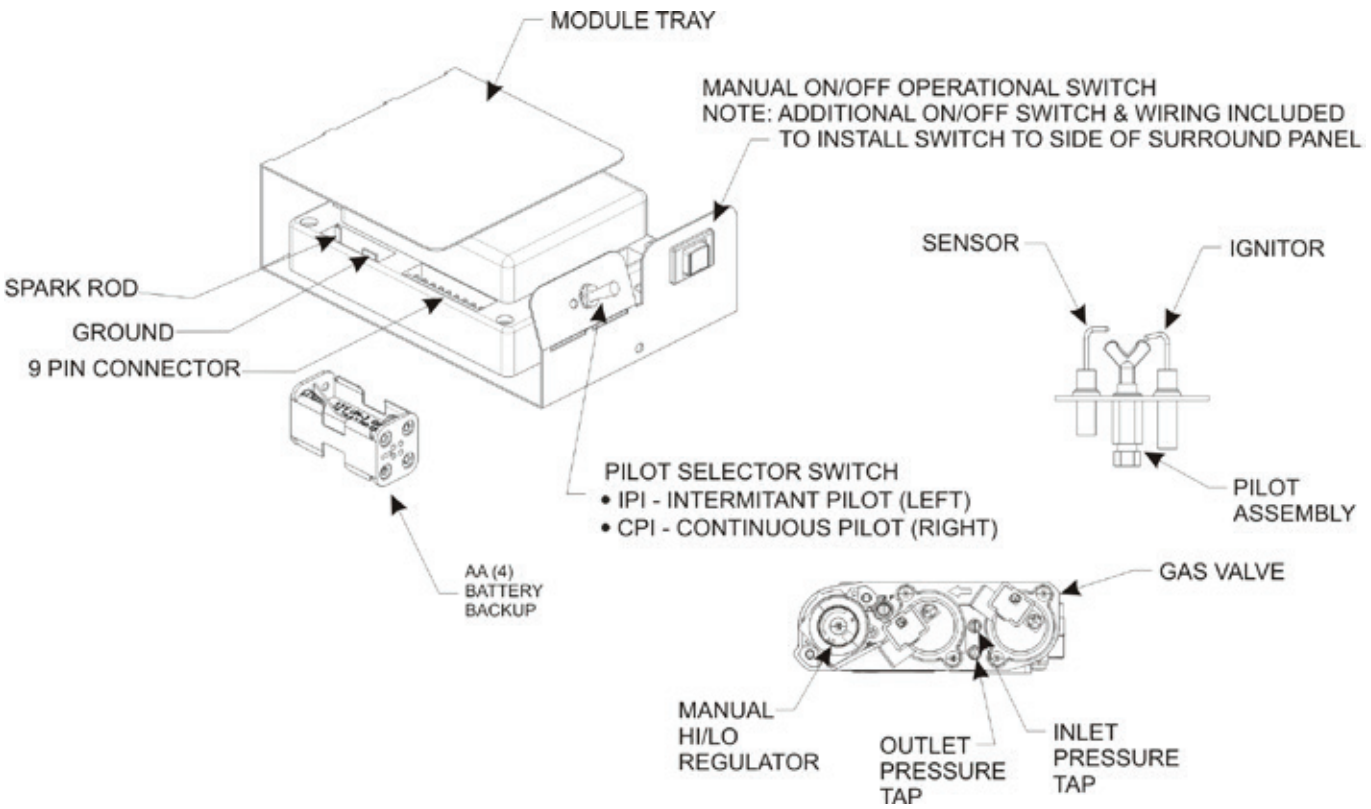

Figure 32

IPI ELECTRONIC SYSTEM WIRING DIAGRAM

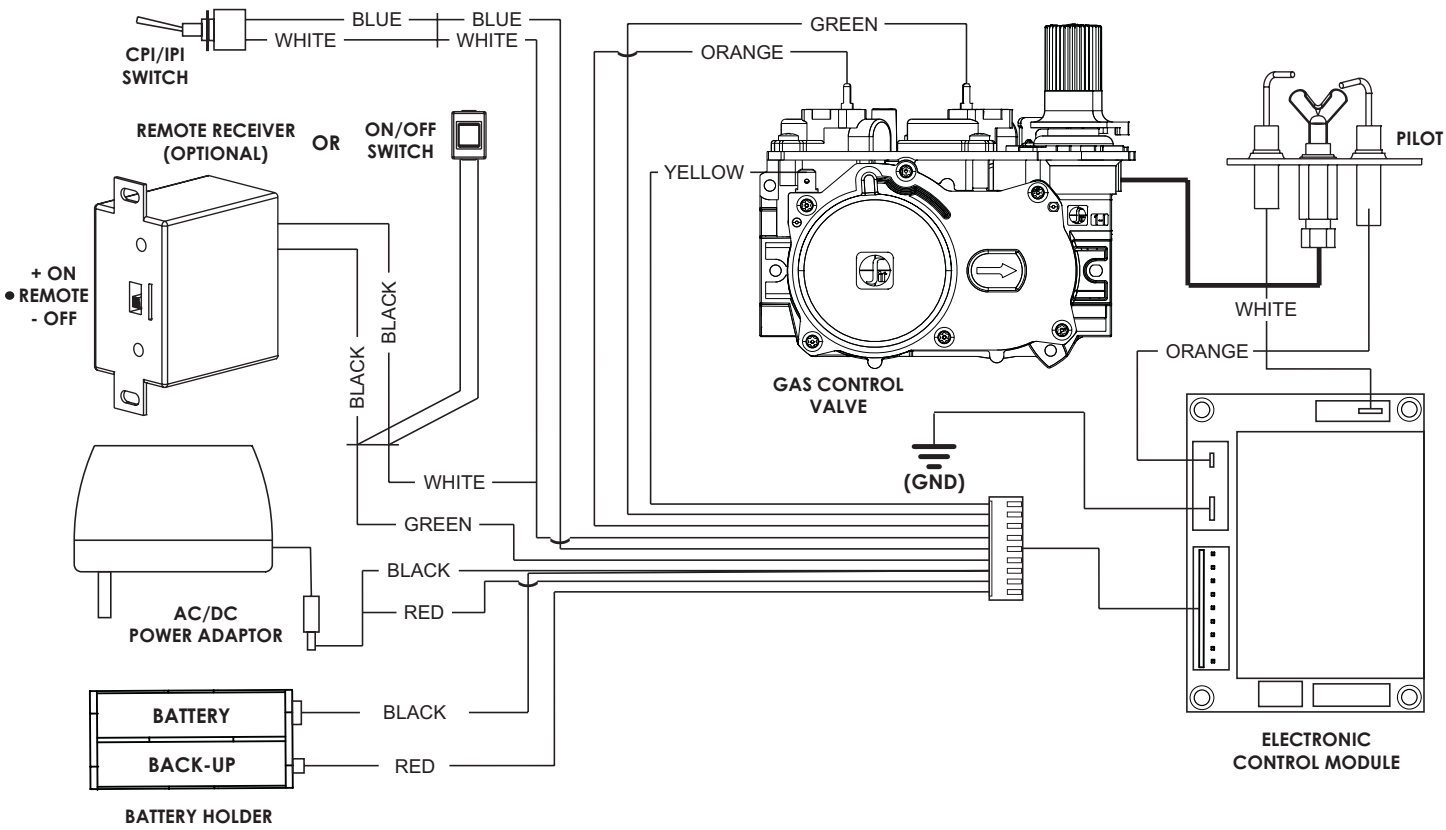

If any of the original wire as supplied with this unit must be replaced, it must be replaced with equivalent gauge and temperature rated wire.

This appliance is only for use with the type of gas indicated on the rating plate and may be installed in an aftermarket, permanently located, manufactured (mobile) home where not prohibited by local codes. This appliance is not convertible for use with other gases, unless a certified kit is used.

⚠ CAUTION

Do not operate the appliance with panel(s) removed, cracked or broken. Replacement of the panel(s) should be done by a licensed or qualified service person.

⚠ WARNING

Improper installation, adjustment, alteration, service or maintenance can cause property damage, personal injury or loss of life. Installation and service must be performed by a qualified installer, service agency or the gas supplier.

⚠ WARNING

Electrical Grounding Instructions
This appliance is equipped with a three-prong (grounding) plug for your protection against shock hazard and should be plugged directly into a properly grounded three-prong receptacle. Do not cut or remove the grounding prong from this plug. The AC/DC adapter, if used, has a 2-prong plug which does not require an additional ground.

⚠ CAUTION

Label all wires prior to disconnection when servicing controls. Wiring errors can cause improper and dangerous operation.

Verify proper operation after servicing.

INTERMITTENT PILOT LIGHTING INSTRUCTIONS

FOR YOUR SAFETY READ BEFORE LIGHTING

⚠ WARNING: If you do not follow these instructions exactly, a fire or explosion may result causing property damage, personal injury or loss of life.

A. This appliance has a pilot which can be lighted with the manual on/off switch, a remote control, or by switching the remote receiver switch to the “ON” position. When lighting the pilot, follow these instructions exactly.

B. Before lighting smell all around the appliance area for gas. Be sure to smell next to the floor because some gas is heavier than air and will settle on the floor.

What To Do If You Smell Gas
- Do not try to light any appliance.
- Do not touch any electrical switch;
- Do not use any phone in your building.
- Immediately call your gas supplier from a neighbor's phone. Follow the gas supplier's instructions.
- If you cannot reach your gas supplier, call the fire department.

C. Use only the remote control or manual remote receiver switch to operate the gas valve. Never use tools. If valve does not operate, don’t try to repair it, call a qualified service technician. Force or attempted repair may result in a fire or explosion.

D. Do not use this appliance if any part has been under water. Immediately call a qualified service technician to inspect the appliance and to replace any part of the control system and any gas control which has been under water.

LIGHTING INSTRUCTIONS

1. STOP! Read the safety information above.
2. Turn OFF electric power to the appliance.
3. Remove front surround panel assembly or bottom louver if included.
4. Turn gas shut-off valve counterclockwise to “On” position.
5. Wait ten minutes to clear out any gas. Then smell for gas, including near the floor. If you smell gas, STOP! Follow “B” in the safety information above on this page. If you do not smell gas, go to the next step.
6. Turn ON electric power to the appliance.
7. Find pilot - Follow metal tube from gas control. The pilot is behind the burner on the right side.
8. Turn main flame to on. If the pilot does not light within 60 seconds, stop and go to Step 5.
9. Refer to remote control instructions for detailed information, control features, and operation. ***NOTICE***: There is a CPI/IPI switch behind the right side panel that allows for a continuous standing pilot mode or an intermittent pilot mode. See appliance manual for location of this switch. If the pilot or burner does not stay lit (in the standing pilot mode), stop and immediately call a qualified service technician or gas supplier.
10. If the burner or pilot does not operate properly after several tries, turn the gas shut-off valve clockwise to “OFF” and call your service technician or gas supplier.
11. Replace the front surround assembly or close bottom louver assembly (if applicable).
12. Operation of the gas valve is controlled by a manual on/off switch or a hand held remote control. Refer to remote instructions for detailed operation information.

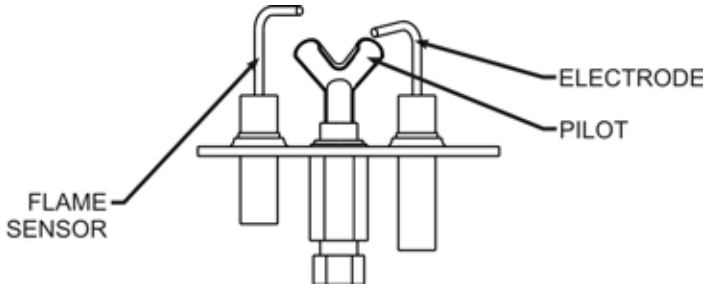

Shut-off valve

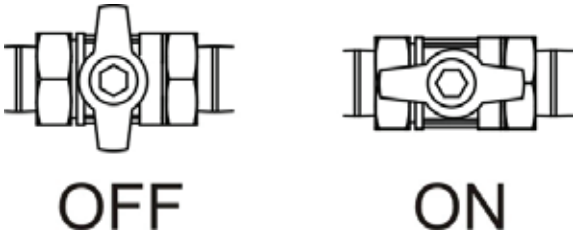

TO TURN OFF GAS TO FIREPLACE

1. Set REMOTE/OFF/ON switch to OFF.
2. Turn off all electric power to the appliance if service is to be performed (if applicable).
3. Turn gas shut off valve to “OFF” position.

INTERMITTENT CONTROL SYSTEM TROUBLESHOOTING

Brief Description of the Components

The gas valve is fitted with a manual HI/LO knob to allow for manual modulation of the gas outlet pressure to the appliance burner. The controls are designed to be used with either Propane or Natural Gas and can be converted by use of an OEM supplied conversion kit.

The Digital Fireplace Control (DFC) is an automatic gas ignition system based on a single microcontroller core. This control manages all functions related to ignition, flame sensing and supervision for atmospheric applications.

The DFC can be set to provide continuous or intermittent ignition control sequences and flame monitoring with safety shutdown in case of failure.

The DFC is set up as a stand alone AC powered system with battery back up. See Lighting Instructions on page 39 and Wiring Diagram on page 38.

Troubleshooting

Before proceeding with the procedures in the following troubleshooting table, verify that the power supply (AC/DC adapter) is present and that the batteries inside the receiver and/or optional battery pack are fresh and installed with correct polarity.

Make sure all the connections between the wire harnesses and system components are proper and positive.

Verify that the static inlet pressure meets the manufacturer's recommended inlet pressure. If necessary adjust the line pressure regulator.

If the recommended actions for the following troubleshooting chart do not help to address the problem consider replacing wiring harnesses.

⚠ WARNING

Any actions performed on the gas valve must be performed in accordance with this instruction manual. Likewise, any actions performed on the DFC or other system components must be done in accordance with the individual component instructions. Replacement of components must be performed in accordance with this instructions manual.

INTERMITTENT CONTROL SYSTEM TROUBLESHOOTING

PROBLEM OBSERVED	POSSIBLE CAUSE	CORRECTIVE MEASURE
Gas odor during setup	Gas Leak	What To Do If You Smell Gas • Do not try to light any appliance. • Do not touch any electrical switch; • Do not use any phone in your building. • Immediately call your gas supplier from a neighbor's phone. Follow the gas supplier's instructions. • If you cannot reach your gas supplier, call the fire department.
Gas odor before first ignition		
Fireplace is "on" but no flame and pilot is not trying to light	Loose gas line connections	Check connections with leak detecting solution
	Loose electrical connections	Check connections with wiring diagram
	(Optional) Receiver batteries bad	Install new batteries
	(Optional) Receiver not sync with remote	Sync receiver with remote. See page ____.
	Gas Line Valve turned "off"	Turn shutoff valve to "open" position
	Control module in "lockout"	Turn fireplace "off" for 2 minutes and then back "on"
	Battery voltage low	Check voltage. Replace batteries if low.
Pilot will not ignite, or will not stay lit	Pilot igniter/sensor is dirty	Clean flame sensor and pilot igniter. See maintenance page ____
	Pilot not grounded well	Check ground connections
	Sensor Wire loose	Check sensor wire terminals
	Pilot gas pressure incorrect	Adjust gas pressure
	Pilot Gas Line bent or kinked	Replace pilot tube
	Faulty pilot, Sensor bent	Replace Pilot
	Faulty valve	Replace Valve
Pilot continues to spark when pilot is lit.	Battery voltage low	Check voltage. Replace batteries if low.
	Not enough gas to pilot	Wait for pilot flame to strengthen
	Low Gas Pressure	Check pressures. See page ____
	Pilot igniter/sensor is dirty	Clean pilot. See maintenance page ____
	Pilot not grounded well	Check ground connections
	Draft in firebox	DV: vent restrictor not installed VF: redirect draft from room or wall
	Pilot sensor has been bent	Replace pilot
Burner takes too long to fully light	Low gas pressure	Check gas supply pressure
	Clogged or dirty carryover/burner ports	Clean ports
	Blocked orifice	Check orifice opening
	Faulty valve	Replace valve
Burner does not light but pilot remains on	Loose electrical connections	Check connections with wiring diagram
	Low gas pressure	Check gas supply pressure
	Clogged or dirty burner ports	Clean burner ports
	Blocked orifice	Check orifice opening
	Loose wire connections	Check valve/control module connections
	(Optional) Receiver not sync with remote	Sync receiver with remote. See page ____.
	(if optional remote) battery too low	Change batteries
	(if optional remote) remote not controlling burner	Re-learn remote box and handheld remote
	Faulty pilot	Replace pilot
	Faulty valve	Replace valve

INTERMITTENT CONTROL SYSTEM TROUBLESHOOTING

Burner lights but does not stay lit while pilot remains on	Low gas pressure	Check gas supply pressure
	Loose sensor wire	Check wire connection
	Valve not grounded well	Check ground connections
	Clogged or dirty burner ports	Clean burner ports
	(For fireplace equipped with optional thermostat or thermostat remote) Room temperature is higher than thermostat setting	Move (optional) remote away from fireplace
		Set higher temperature on (Optional) remote/ thermostat
	(Optional) Remote control batteries failing	Replace batteries in remote transmitter and receiver
	Faulty pilot or thermocouple (millivolts)	Replace pilot
	Faulty valve	Replace valve
Burner & pilot light but will not stay lit	Flame sensor dirty	Clean pilot sensor
	Low gas pressure	Check gas supply pressure
	Not enough fresh air for pilot	Open door or window - ventilate
	Clogged or dirty burner ports	Clean burner ports
	(For fireplace equipped with optional thermostat or thermostat remote) Room temperature is higher than thermostat setting	Move (optional) remote away from fireplace
		Set higher temperature on (Optional) remote/ thermostat
	(Optional) Remote control batteries failing	Replace batteries in remote transmitter and receiver
	Faulty pilot or thermocouple	Replace pilot
Incorrect burner flame	Incorrect gas supply or pressure	Check gas supply pressure
	Blocked orifice	Check orifice opening
	Clogged or dirty burner ports	Clean burner ports
	Faulty valve	Replace valve
	High altitude	Adjust orifice size for altitude or pressure
Backfire of burner	Clogged or dirty burner ports	Clean burner ports
	Blocked orifice	Check orifice opening
	High/Low gas pressure	Check gas supply pressure
Appliance produces unwanted odors	Initial burn-off of manufacturing chemicals	Ventilate room until odor stops
	Vapors from paint, candles, air fresheners, hairspray, glue, etc.	Ventilate room until odor stops. Do not use paint, candles, air fresheners, hairspray, glue, etc around fireplace
Whistle noise from appliance	Check gas pressure	Adjust gas pressure to recommended setting.
	Air in gas line	Bleed lines
	Flex line pinched or too small diameter line	Replace pinched flexline, replace gas feed line with larger diameter, or non-whistle gas flexline (sold separately)

MAINTENANCE AND SERVICE

IMPORTANT: Turn off the gas before servicing the appliance.

Although the frequency of servicing and maintenance will depend on use and the type of installation, you should have a qualified service technician perform an appliance checkup at the beginning of each heating season. Specific guidelines regarding each appliance maintenance task are listed below.

NOTICE
It is normal for steel appliances to make expansion and/or contraction noise during the start-up or cool-down cycle. Similar noises are found with your furnace heat exchanger or car engine.
It is normal for your gas fireplace insert to give off some odor the first time it is burned. This is due to the curing of the paint and any oil from the manufacturing process.
If odor becomes offensive, open windows.

Barrier Screen Removal

NOTE: Do not handle barrier screen or door assembly with your bare hands! (Always Wear Gloves)

1. Press inward and upward at the top of the barrier frame.
2. Lift the barrier screen assembly up approximately 3/8 inch until the bottom bracket is free from the bottom of the glass door frame.
3. Swing the bottom of the barrier toward you until the barrier can be removed from the top opening (the space between the surround and insert top).

General Glass Information

⚠ WARNING

Do not operate appliance with the glass front removed, cracked or broken. Replacement of the glass should be done by a licensed or qualified service person.

Only glass approved for use by the manufacturer in fireplace may be used for replacement. The glass replacement should be done by a licensed or qualified service person.

⚠ WARNING

1. The use of substitute glass will void all product warranties.
2. Avoid breaking the glass.
3. Do not operate this appliance without the glass front or with a broken glass front. Have a qualified service person replace damaged glass and gasket using materials specified by Empire Comfort Systems.
4. Do not abuse or strike the glass.

⚠ CAUTION

Do not use Ammonia based or abrasive cleaners on glass. Do not attempt to clean glass when glass is hot.

Cleaning Glass Door

Frequency: After the first 3 to 4 hours of use. As necessary after initial cleaning.
By: Home owner.
Task: Remove and clean glass after the first 3 to 4 hours of use. After the initial cleaning, clean as necessary. Film deposits on the inside of the glass door should be cleaned off using a household glass cleaner.

⚠ CAUTION

Do not handle or attempt to clean the door when it is hot and Do not use abrasive cleaners.

Glass Door Removal

1. Remove the barrier screen. Press in and up at the top of the barrier frame. Lift the barrier screen assembly up approximately 3/8 inch until the bottom bracket is free from the bottom of the glass door frame. Swing the bottom of the barrier toward you until the barrier can be removed from the top opening, which is the space between the surround and insert top.
2. Locate the bottom two glass frame spring clamps. Pull forward and down to release them from the Glass Door frame.
3. Remove the Glass Door by pulling the bottom of the door outward several inches, then lift upwards to disengage it from the firebox upper flange.
5. Do not abuse the glass by striking or hitting the glass.

Glass Door Installation

NOTE: Do not handle barrier screen or door assembly with your bare hands! (Always Wear Gloves)

1. When installing the Glass Door assembly, make sure that the door top flange is hooked over the firebox top flange as illustrated in the “Correct” view in Figure 33.
   Important: Do not allow the gasket across the top of the door to roll up on top of the firebox flange as shown in “Incorrect” view in Figure 33.
2. To install correctly, the door should be held at an angle outward from the firebox as shown in the illustration, then carefully engage the upper flange of the door frame with the top flange of the firebox. Center the door left to right, then allow the bottom of the door to swing inward to seal against the firebox front.
3. Once the glass door is placed flat to the firebox front edges, engage the two spring latches to the bottom flange on the glass door frame to secure the door assembly.
4. Replace barrier screen.

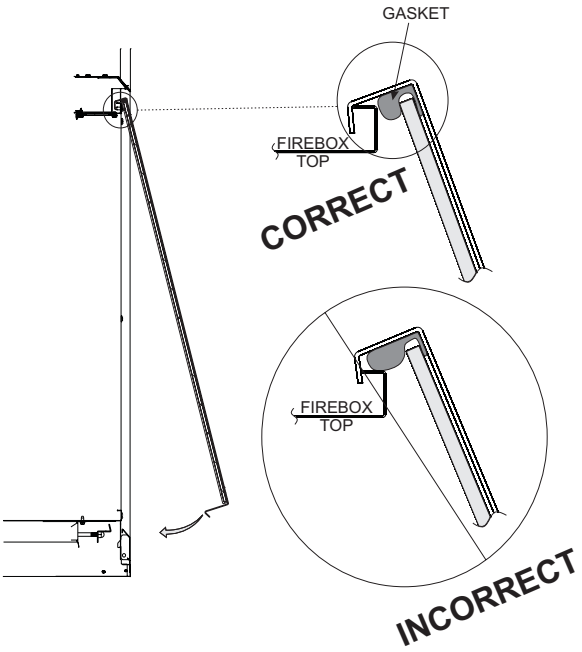

Figure 33

Cleaning Burner and Controls

Frequency: Once annually.
By: Qualified service technician.
Task: Brush or vacuum the control compartment, fireplace logs and burner areas surrounding the logs.

Checking Flame Patterns, Flame Height

Frequency: Periodically.
By: Qualified service technician/Home owner.
Task: Make a visual check of your fireplace insert’s flame patterns.
Make sure the flames are steady - not lifting or floating. The thermopile/thermocouple (standing pilot) tips should be covered with flame. **See Figure 30.**

Checking Vent System

Frequency: Before initial use and at least annually thereafter, more frequently if possible.
By: Qualified service technician/Home owner.
Task: Inspect the external vent cap on a regular basis to ensure that no debris is interfering with the flow of air. Inspect entire vent system for proper function.

Cleaning Logs

Use a soft brush attachment on a vacuum cleaner to gently remove dust or soot deposits from logs and burner.

INSERT PARTS VIEW

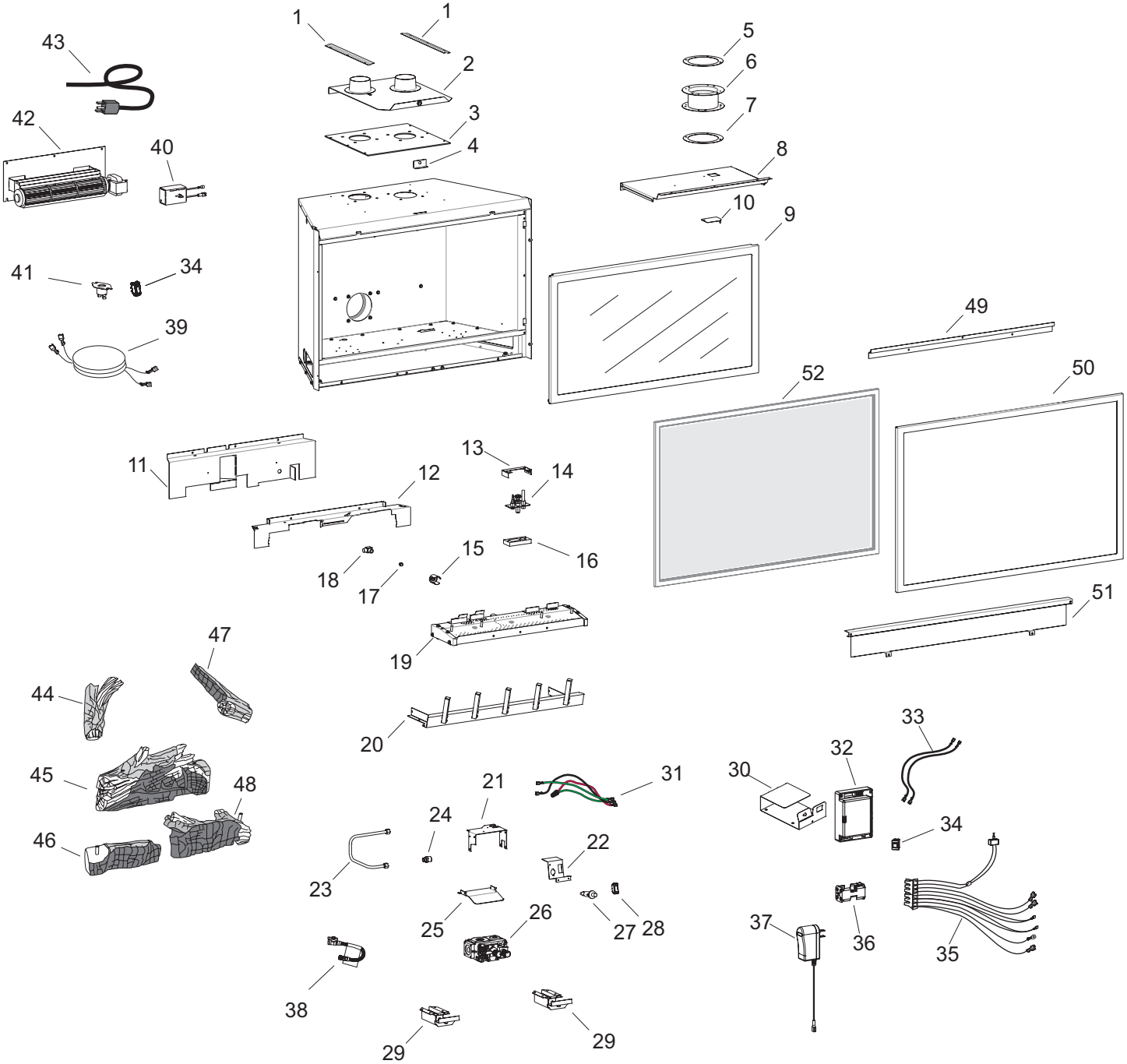

⚠ WARNING

Failure to position parts in accordance with these diagrams or failure to use only parts specifically approved with this appliance may result in property damage or personal injury.

INSERT PARTS LIST

INDEX NO.	PART NUMBER						DESCRIPTION
	DVC20IN31	DVC20IN71	DVC26IN31	DVC26IN71	DVC28IN31	DVC28IN71	
1	22950	22950	22950	22950	22950	22950	Guide, Flue Connector
2	23211	23211	23211	23211	23211	23211	Vent Slide Plate Assembly
3	R9188	R9188	R9188	R9188	R9188	R9188	Gasket, Top
4	36562	36562	36562	36562	36562	36562	Bracket, Slide Plate
5	M163	M163	M163	M163	M163	M163	Gasket, Flue Connector
6	23009	23009	23009	23009	23009	23009	Flue Connector Assembly
7	M163	M163	M163	M163	M163	M163	Gasket, Flue Connector
8	22951	22951	22972	22972	22972	22972	Firebox Baffle
9	23303	23303	23006	23006	23320	23320	Glass Door & Frame Assembly
10	27860	27860	27860	27860	27860	27860	Plate, Firebox Baffle
11	36510	36510	36511	36511	36512	36512	Log Shelf
12	36528	36528	36529	36529	36530	36530	Log Support, Rear
13	31300	31300	31300	31300	31300	31300	Pilot Bracket
14A	R7612	R10423	R7612	R10423	R7612	R10423	Pilot - NAT
14B	R7611	R10424	R7611	R10424	R7611	R10424	Pilot - LP
15	R5676	R5676	R5676	R5676	R5676	R5676	Air Shutter
16	R9189	R9189	R9189	R9189	R9189	R9189	Gasket, Pilot
17A	P252	P252	P257	P257	P324	P324	Orifice, Main Burner - NAT
17B	P266	P266	P214	P214	P258	P258	Orifice, Main Burner - LP
18	P253	P253	P253	P253	P253	P253	Fitting, Orifice Angled
19	36546	36546	36547	36547	36547	36547	Burner Assembly
20	23315	23315	23024	23024	23024	23024	Grate / Tang Bracket Assembly
21	22959	29400	22959	29400	22959	29400	Valve Bracket
22	22953	N/A	22953	N/A	22953	N/A	Piezo Bracket
23	22739	22739	22738	22738	22738	22738	Tubing Assembly
24	R2423	R2423	R2423	R2423	R2423	R2423	Connector, Male
25	22973	36642	22973	36642	22973	36642	Shield, Valve Heat
26A	R7577	R11125	R7577	R11125	R7577	R11125	Valve, SIT Gas - NAT
26B	R7578	R11126	R7578	R11126	R7578	R11126	Valve, SIT Gas - LP

INSERT PARTS LIST

INDEX NO.	PART NUMBER						DESCRIPTION
	DVC20IN31	DVC20IN71	DVC26IN31	DVC26IN71	DVC28IN31	DVC28IN71	
27	R2708	N/A	R2708	N/A	R2708	N/A	Igniter, Piezo
28	R3436	R3436	R3436	R3436	R3436	R3436	Switch, Remote/Off/On
29	16223	16223	16223	16223	16223	16223	Spring Retainer Assembly
30	N/A	29382	N/A	29382	N/A	29382	Tray, Module
31	R10947	N/A	R10947	N/A	R10947	N/A	Wire Assembly
32	N/A	R11127	N/A	R11127	N/A	R11127	DFC Control Board
33	N/A	R2667	N/A	R2667	N/A	R2667	Wire, 5-1/2 inch Black (Quantity 2)
34	N/A	R2522	N/A	R2522	N/A	R2522	Switch, ON/OFF
35	N/A	R11123	N/A	R11123	N/A	R11123	Wire Harness
36	N/A	R11122	N/A	R11122	N/A	R11122	Battery Holder
37	N/A	R11128	N/A	R11128	N/A	R11128	AC Adaptor, 7.0 VDC
38	R10961	R10961	R10961	R10961	R10961	R10961	Flexline with Shutoff Valve
39	R9268	R9268	R9268	R9268	R9268	R9268	Wire Assembly - Switch
40	18879	18879	18879	18879	18879	18879	Rheostat Assembly (Speed Control)
41	33411	33411	33411	33411	33411	33411	Fan Control
42	24925	24925	24925	24925	24925	24925	Blower Sub-assembly (with mounting plate & Pad)
43	R2204	R2204	R2204	R2204	R2204	R2204	Cord Set
44	36935	36935	36939	36939	36939	36939	Left Top Log
45	36934	36934	36938	36938	36938	36938	Rear Log
46	36557	36557	36559	36559	36559	36559	Left Front Log
47	36556	36556	36558	36558	36558	36558	Right Front Log
48	36936	36936	36936	36936	36936	36936	Right Top Log
49	36569	36569	36569	36569	36569	36569	Bracket, Top Screen
50	36570	36570	36571	36571	36572	36572	Screen Frame
51	36566	36566	36567	36567	36568	36568	Bracket, Bottom Screen
52	Q0033	Q0033	Q0034	Q0034	Q0035	Q0035	Barrier Screen Replacement
NS	36563	36563	36564	36564	36565	36565	Barrier Screen Frame Assembly - Includes Index Nos. 49 - 52
NS	R15970	R15970	R15970	R15970	R15970	R15970	Glowing Embers

NS - Not Shown on Insert Parts View.

MASTER PARTS DISTRIBUTOR LIST

To Order Parts Under Warranty, please contact your local Empire dealer. See the dealer locator at www.empirecomfort.com. To provide warranty service, your dealer will need your name and address, purchase date and serial number, and the nature of the problem with the unit.
To Order Parts After the Warranty Period, please contact your dealer or one of the Master Parts Distributors listed below. This list changes from time to time. For the current list, please click on the Master Parts button at www.empirecomfort.com.
Please note: Master Parts Distributors are independent businesses that stock the most commonly ordered Original Equipment repair parts for Heaters, Grills, and Fireplaces manufactured by Empire Comfort Systems Inc.

Dey Distributing
1401 Willow Lake Boulevard
Vadnais Heights, MN 55101

Phone: 651-490-9191
Toll Free: 800-397-1339
Website: www.deydistributing.com
Parts: Heater, Hearth and Grills

Victor Division of F. W. Webb Company
200 Locust Street
Hartford, CT 06114

Phone: 860-722-2433
Toll Free: 800-243-9360
Fax: 860-293-0479
Toll Free Fax: 800-274-2004
Websites: www.fwwebb.com & www.victormfg.com
Parts: Heater, Hearth and Grills

East Coast Energy Products
10 East Route 36
West Long Branch, NJ 07764

Phone: 732-870-8809
Toll Free: 800-755-8809
Fax: 732-870-8811
Website: www.eastcoastenergy.com
Parts: Heater, Hearth and Grills

HOW TO ORDER REPAIR PARTS

Parts Not Under Warranty

Parts can be ordered through your Service Person, Dealer, or a Master Parts Distributor. See this page for the Master Parts Distributors list. For best results, the **service person or dealer** should order parts through the distributor. Parts can be shipped directly to the **service person/dealer**.

Warranty Parts

Warranty parts will need a proof of purchase and can be ordered by your Service Person or Dealer. Proof of purchase is **required** for warranty parts.

All parts listed in the Parts List have a Part Number. When ordering parts, first obtain the Model Number and Serial Number from the name plate on your equipment. Then determine the Part Number (**not** the Index Number) and the Description of each part from the following illustration and part list. Be sure to give all this information . . .

Appliance Model Number _____ Part Description _____

Appliance Serial Number _____ Part Number _____

Type of Gas (Propane or Natural) _____

Do not order bolts, screws, washers or nuts. They are standard hardware items and can be purchased at any local hardware store.

Shipments contingent upon strikes, fires and all causes beyond our control.

IMPORTANT SAFETY INFORMATION

⚠ WARNING

Read and follow these safety precautions prior to operating this appliance. Failure to follow these precautions may result in death, injury, or property damage.

Safety Precautions

Before enclosing the vent pipe assembly, operate the appliance to ensure it is venting properly.

Do not operate this appliance without the glass door installed.

⚠ CAUTION

If the glass used in your fireplace is cracked or damaged in any way, it should be replaced only with a complete glass frame assembly from Empire. See parts list on Pages 45 to 47 for ordering.

⚠ WARNING

Do not operate appliance with the glass front removed, cracked or broken. Replacement of the glass should be done by a licensed or qualified service person.

- Due to high temperatures, the appliance should be located out of traffic and away from furniture and draperies.
- Children and adults should be alerted to the hazards of high surface temperature and should stay away to avoid burns or clothing ignition.
- Young children should be carefully supervised when they are in the same room as the appliance. Toddlers, young children, and others may be susceptible to accidental contract burns. A physical barrier is recommended if there are at-risk individuals in the house. To restrict access to a fireplace or stove, install an adjustable safety gate to keep toddlers, young children, and other at-risk individuals out of the room and away from hot surfaces.
- Any safety screen, guard, or barrier removed to service an appliance must be replaced prior to operating the appliance.
- If the barrier becomes damaged, the barrier shall be replaced with the manufacturer's barrier for this appliance.
- Only trim kit(s) supplied by the manufacturer shall be used in the installation of this appliance.
- A barrier designed to reduce the risk of burns from the hot viewing glass is provided with this appliance and shall be installed for the protection of children and other at-risk individuals.
- Only doors certified with the appliance shall be used.
- Installation and repair should be done by a qualified service person. The appliance should be inspected before use and at least annually by a qualified service person. More frequent cleaning may be required due to excessive lint from carpeting, bedding material, etc. It is imperative that control compartments, burners and circulating air passageways of the appliance be kept clean.
- Clothing or other flammable material should not be placed on or near the appliance.
- **Do not** use this appliance if any part has been under water. Immediately call a qualified service technician to inspect the appliance and to replace any part of the control system and any gas control which has been under water.

SAFETY INFORMATION FOR USERS OF LP-GAS

Propane (LP-Gas) is a flammable gas which can cause fires and explosions. In its natural state, propane is odorless and colorless. You may not know all the following safety precautions which can protect both you and your family from an accident. Read them carefully now, then review them point by point with the members of your household. Someday when there may not be a minute to lose, everyone's safety will depend on knowing exactly what to do. If, after reading the following information, you feel you still need more information, please contact your gas supplier.

LP-GAS WARNING ODOR

If a gas leak happens, you should be able to smell the gas because of the odorant put in the LP-Gas.
That's your signal to go into immediate action!

- Do not operate electric switches, light matches, use your phone. Do not do anything that could ignite the gas.
- Get everyone out of the building, vehicle, trailer, or area. Do that IMMEDIATELY.
- Close all gas tank or cylinder supply valves.
- LP-Gas is heavier than air and may settle in low areas such as basements. When you have reason to suspect a gas leak, keep out of basements and other low areas. Stay out until firefighters declare them to be safe.
- Use your neighbor's phone and call a trained LP-Gas service person and the fire department. Even though you may not continue to smell gas, do not turn on the gas again. Do not re-enter the building, vehicle, trailer, or area.
- **Finally,** let the service man and firefighters check for escaped gas. Have them air out the area before you return. Properly trained LP-Gas service people should repair the leak, then check and relight the gas appliance for you.

NO ODOR DETECTED - ODOR FADE

Some people cannot smell well. Some people cannot smell the odor of the chemical put into the gas. You must find out if you can smell the odorant in propane. Smoking can decrease your ability to smell. Being around an odor for a time can affect your sensitivity or ability to detect that odor. Sometimes other odors in the area mask the gas odor. People may not smell the gas odor or their minds are on something else. Thinking about smelling a gas odor can make it easier to smell.

The odorant in LP-gas is colorless, and it can fade under some circumstances. For example, if there is an underground leak, the movement of the gas through soil can filter the odorant. Odorants in LP-Gas also are subject to oxidation. This fading can occur if there is rust inside the storage tank or in iron gas pipes.

The odorant in escaped gas can adsorb or absorb onto or into walls, masonry and other materials and fabrics in a room. That will take some of the odorant out of the gas, reducing its odor intensity.

LP-Gas may stratify in a closed area, and the odor intensity could vary at different levels. Since it is heavier than air, there may be more odor at lower levels. Always be sensitive to the slightest gas odor. If you detect any odor, treat it as a serious leak. Immediately go into action as instructed earlier.

SOME POINTS TO REMEMBER

- Learn to recognize the odor of LP-gas. Your local LP-Gas Dealer can give you a "Scratch and Sniff" pamphlet. Use it to find out what the propane odor smells like. If you suspect that your LP-Gas has a weak or abnormal odor, call your LP-Gas Dealer.
- If you are not qualified, do not light pilot lights, perform service, or make adjustments to appliances on the LP-Gas system. If you are qualified, consciously think about the odor of LP-Gas prior to and while lighting pilot lights or performing service or making adjustments.
- Sometimes a basement or a closed-up house has a musty smell that can cover up the LP-Gas odor. Do not try to light pilot lights, perform service, or make adjustments in an area where the conditions are such that you may not detect the odor if there has been a leak of LP-Gas.
- Odor fade, due to oxidation by rust or adsorption on walls of new cylinders and tanks, is possible. Therefore, people should be particularly alert and careful when new tanks or cylinders are placed in service. Odor fade can occur in new tanks, or reinstalled old tanks, if they are filled and allowed to set too long before refilling. Cylinders and tanks which have been out of service for a time may develop internal rust which will cause odor fade. If such conditions are suspected to exist, a periodic sniff test of the gas is advisable. **If you have any question about the gas odor, call your LP-gas dealer. A periodic sniff test of the LP-gas is a good safety measure under any condition.**
- If, at any time, you do not smell the LP-Gas odorant and you think you should, assume you have a leak. Then take the same immediate action recommended above for the occasion when you do detect the odorized LP-Gas.
- If you experience a complete "gas out," (the container is under no vapor pressure), turn the tank valve off immediately. If the container valve is left on, the container may draw in some air through openings such as pilot light orifices. If this occurs, some new internal rusting could occur. If the valve is left open, then treat the container as a new tank. Always be sure your container is under vapor pressure by turning it off at the container before it goes completely empty or having it refilled before it is completely empty.

FOR THE HOMEOWNER

Empire Comfort Systems has manufactured safe, reliable heating systems since 1932. We take pride in our reputation for quality products, backed by the best sales, service and distribution network in this industry. These fireplace inserts combine our proven technologies with exceptional artistry and craftsmanship to add beauty and warmth to any home.

There are several decorative options available for your fireplace insert. Contact your Empire dealer for more information. Or, visit our website at www.empirecomfort.com

EMPIRE
COMFORT SYSTEMS
SINCE 1932

IMPORTANT INFORMATION

⚠ WARNING

Read and follow these safety precautions prior to operating this appliance. Failure to follow these precautions may result in death, injury, or property damage.

Samples and Definitions:

⚠ DANGER

Indicates a hazardous situation which, if not avoided, will result in death or serious injury.

⚠ WARNING

Indicates a hazardous situation which, if not avoided, could result in death or serious injury.

⚠ CAUTION

Indicates a hazardous situation which, if not avoided, could result in minor or moderate injury.

NOTICE: Addresses practices not related to personal injury.

All correspondence should refer to complete Model Number, Serial Number and type of gas. Fill out the Homeowner Reference Section on page 5.

⚠ WARNING

This fireplace insert is not for use with solid fuels. Improper use of the fireplace insert can cause serious injury or death from fire, burns, explosions or carbon monoxide poisoning.

Television Considerations

Installing a television above a fireplace has become increasingly popular; however, the area above any fireplace gets hot and most TV manufacturers recommend against placing their products near a heat source.
If you install a television above this fireplace, Empire Comfort Systems accepts no responsibility for damage or injuries. Follow the television manufacturer's installation instructions, including any recommendations regarding proximity to heat sources.
If you have a TV above your fireplace, turn off the fireplace and let it cool completely before servicing or touching any buttons on the TV.

Maintenance and Service

Although the frequency of servicing and maintenance will depend on use and the type of installation, you should have a qualified service technician perform an appliance checkup at the beginning of each heating season. Specific guidelines regarding each appliance maintenance task are listed below.

NOTICE: It is normal for steel appliances to make expansion and/or contraction noise during the start-up or cool-down cycle. Similar noises are found with your furnace heat exchanger or car engine.

NOTICE: During manufacture, components of this fireplace insert are treated with oils, films or bonding agents. These are not harmful, but may produce smoke and smells as they are burned off during the initial operation of the fireplace insert. This is normal. Open a window to ventilate the area.

⚠ WARNING

Do not operate appliance with the glass front removed, cracked or broken. Replacement of the glass should be done by a licensed or qualified service person.

Only glass approved for use by the manufacturer in fireplace may be used for replacement. The glass replacement must be done by a licensed or qualified service person.

⚠ WARNING

1. The use of substitute glass will void all product warranties.
2. Avoid breaking the glass.
3. Do not operate this appliance without the glass front or with a broken glass front. Have a qualified service person replace damaged glass and gasket using materials specified by Empire Comfort Systems.
4. Do not abuse or strike the glass.

⚠ CAUTION

Do not use Ammonia based or abrasive cleaners on glass. Do not attempt to clean glass when glass is hot.

Barrier Screen Installation

1. Grasp and hold the barrier screen assembly at an angle as shown in Figure A. Insert the top of the barrier between the surround and fireplace insert top frame.

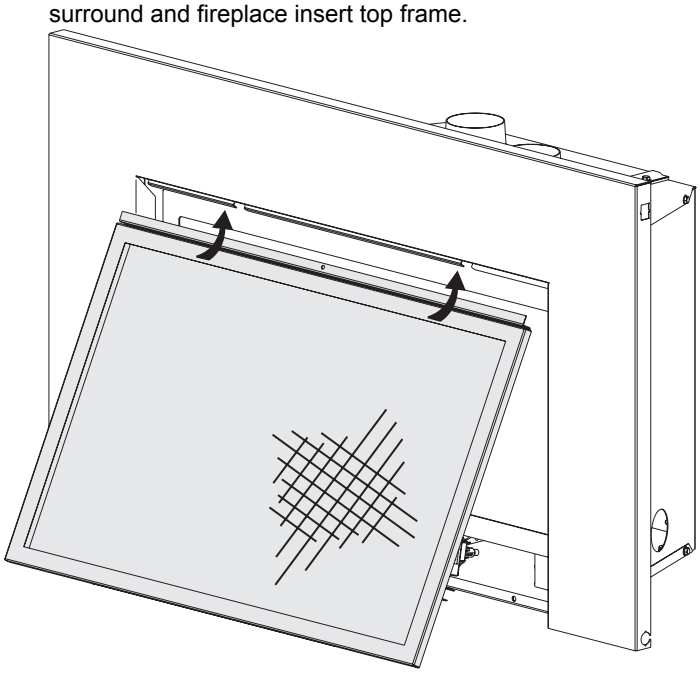

Figure A

2. Raise the barrier just enough to allow the bottom of the barrier to swing inward to a vertical position. **See Figure B.**

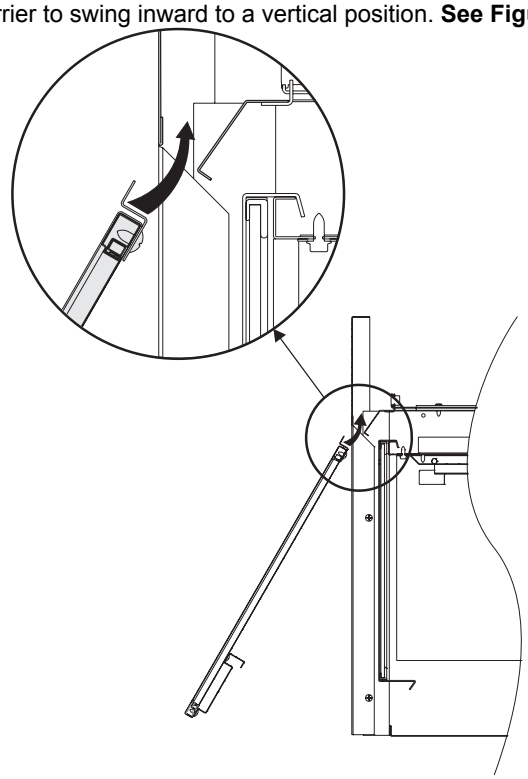

Figure B

3. Once the lower return flange on the back of the barrier is placed against the glass door fame, gently lift the barrier screen up about 3/8 of an inch, push inward on the barrier, then release and lock the lower return flange between the door glass and lower door frame. **See Figure C.**

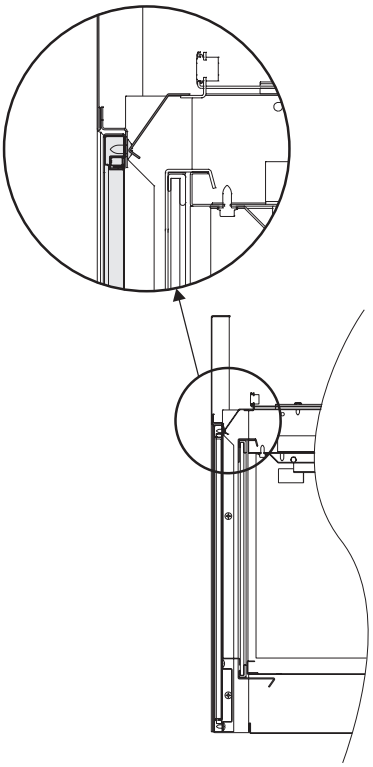

Figure C

Glass Door Removal

1. Remove the barrier screen. Press in and up at the top of the barrier frame. Lift the barrier screen assembly up approximately 3/8 inch until the bottom bracket is free from the bottom of the glass door frame. Swing the bottom of the barrier toward you until the barrier can be removed from the top opening, which is the space between the surround and insert top.
2. Locate the bottom two glass frame spring clamps. Pull forward and down to release them from the Glass Door frame.
3. Remove the Glass Door by pulling the bottom of the door outward several inches, then lift upwards to disengage it from the firebox upper flange.
5. Do not abuse the glass by striking or hitting the glass.

Glass Door Installation

1. When installing the Glass Door assembly, make sure that the door top flange is hooked over the firebox top flange as illustrated in the “Correct” view in Figure D.
   Important: Do not allow the gasket across the top of the door to roll up on top of the firebox flange as shown in “Incorrect” view in Figure D.
2. To install correctly, the door should be held at an angle outward from the firebox as shown in the illustration, then carefully engage the upper flange of the door frame with the top flange of the firebox. Center the door left to right, then allow the bottom of the door to swing inward to seal against the firebox front.
3. Once the glass door is placed flat to the firebox front edges, engage the two spring latches to the bottom flange on the glass door frame to secure the door assembly.
4. Replace barrier screen.

IMPORTANT: Turn off the gas before servicing the appliance.

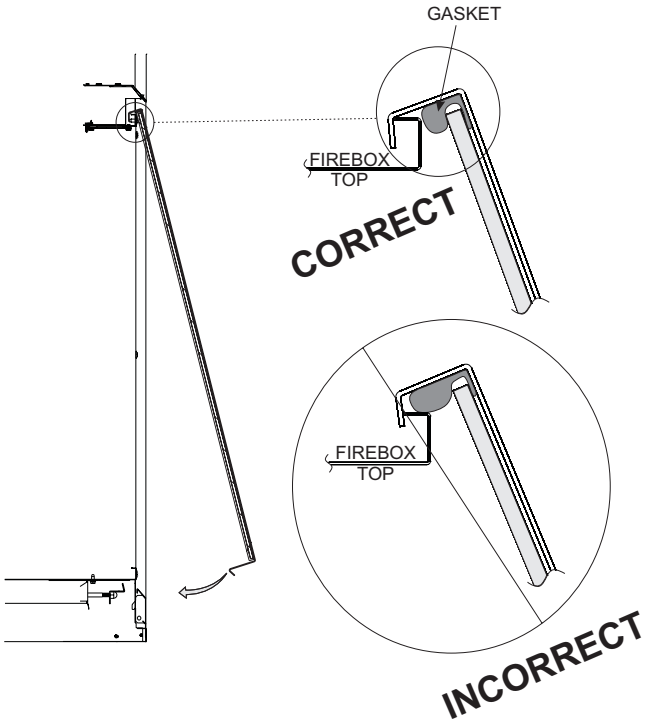

Figure D

Installation, maintenance and repair should be done by a qualified service person. The appliance should be inspected before use and at least annually by a qualified service person. More frequent cleaning may be required due to excessive lint from carpeting, bedding material, etc. It is imperative that control compartments, burners and circulating air passageways of the appliance be kept clean.

Have a Qualified Service Person:

- Make a periodic visual check of pilot and burners. Clean and replace damaged parts.
- Examine and clean the vent system of the solid-fuel burning fireplace.
- Examine the venting system periodically and replace any damage parts
- Clean burner and control compartment.

Clean Burner and Controls

Frequency: Once annually.
By: Qualified service technician.
Task: Brush or vacuum the control compartment, fireplace logs and burner areas surrounding the logs.

Check Flame Patterns, Flame Height

Frequency: Periodically.
By: Qualified service technician/Home owner.
Task: Make a visual check of your fireplace insert’s flame patterns.
Make sure the flames are steady - not lifting or floating. The thermopile/thermocouple (standing pilot) tips should be covered with flame. **See Figure F.**

Check Vent System

Frequency: Before initial use and at least annually thereafter, more frequently if possible.
By: Qualified service technician/Home owner.
Task: Inspect the external vent cap on a regular basis to ensure that no debris is interfering with the flow of air. Inspect entire vent system for proper function.

Clean Logs

Frequency: Periodically
By: Qualified service technician
Task: Use a soft brush attachment on a vacuum cleaner to gently remove dust or soot deposits from logs and burner.

STANDING PILOT (DVC(20,26,28)IN3 MODELS) OPERATING INSTRUCTIONS

The OWNER should carefully read and follow these operating instructions at all times. Remove the barrier to view the gas controls for the fireplace insert.

1. Follow the SAFETY and LIGHTING INSTRUCTIONS for standing pilot controls found in this manual and on labels found in control compartment behind the door assembly.

⚠ WARNING

During the initial purging and subsequent lightings, never allow the gas valve control knob to remain depressed in the “pilot” position without pushing the piezo ignitor button at least once every second.

2. During the operating season, leave the control valve knob in the “ON” position. This will allow the pilot flame to remain lit. Turn the burner flame on or off with the fireplace REMOTE/ OFF/ON switch, wall switch or remote controls.

NOTICE: The gas control valve allows you to increase or decrease the height of the main burner flame. The control valve has a pressure regulator with a knob as shown in **Figure E**. Rotate the knob clockwise to “HI” to increase the flame height and counterclockwise to “LO” to decrease the flame height.

3. When the operating season is over, turn the REMOTE/OFF/ ON switch to “OFF” and the control valve to “OFF”. The system, including the pilot light, will be shut down.

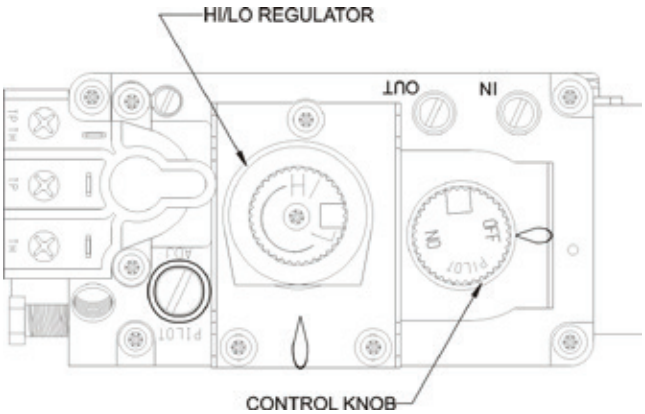

Figure E

Initial Lighting

Upon turning the gas valve on after it has been in the “OFF” position, a small amount of air will be in the lines. When first lighting the fireplace insert, it will take a few minutes for the lines to purge themselves of this air. Once the purging is complete, the fireplace will light and operate satisfactorily.

Subsequent lightings of the appliance will not require such purging if the gas valve is not turned to “OFF.”

Pilot Flame

The thermopile/thermocouple (standing pilot) tips should be surrounded with flame.

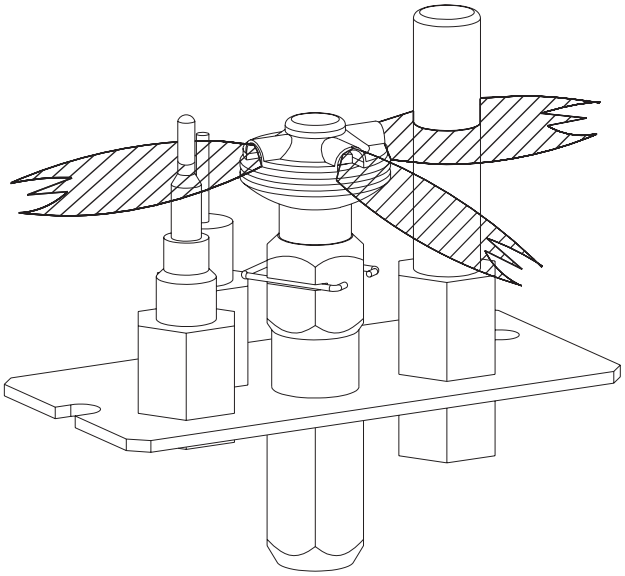

Figure F

STANDING PILOT (DVC(20,26,28)IN3 MODELS) LIGHTING INSTRUCTIONS

FOR YOUR SAFETY READ BEFORE LIGHTING

⚠ WARNING: If you do not follow these instructions exactly, a fire or explosion may result causing property damage, personal injury or loss of life.

A. This appliance has a pilot which must be lighted by hand. When lighting the pilot, follow these instructions exactly.

B. Before lighting smell all around the appliance area for gas. Be sure to smell next to the floor because some gas is heavier than air and will settle on the floor.

What To Do If You Smell Gas
- Do not try to light any appliance.
- Do not touch any electrical switch;
- Do not use any phone in your building.
- Immediately call your gas supplier from a neighbor's phone. Follow the gas supplier's instructions.
- If you cannot reach your gas supplier, call the fire department.

C. Use only your hand to push in or turn the gas control knob. Never use tools. If the knob will not push in or turn by hand, don't try to force it; call a qualified service technician. Force or attempted repair may result in a fire or explosion.

D. Do not use this appliance if any part has been under water. Immediately call a qualified service technician to inspect the appliance and to replace any part of the control system and any gas control which has been under water.

LIGHTING INSTRUCTIONS

1. Stop! Read the safety information above.
2. Set REMOTE/OFF/ON switch to OFF.
3. Turn off all electric power to the appliance (if applicable).
4. Remove barrier assembly.
5. Push in gas control knob slightly and turn clockwise ↷ to “OFF.”

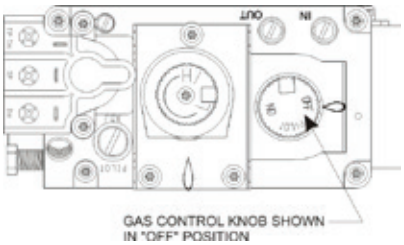

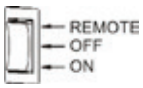

NOTICE: Knob cannot be turned from “PILOT” to “OFF” unless knob is pushed in slightly. Do not force.

6. Wait ten (10) minutes to clear out any gas. Then smell for gas, including near the floor. If you then smell gas, STOP! Follow “B” in the safety information above. If you do not smell gas, go to the next step.
7. Find pilot - Follow metal tube from gas control. The pilot is behind the burner on the right side.
8. Turn gas control knob counterclockwise ↶ to “PILOT.”

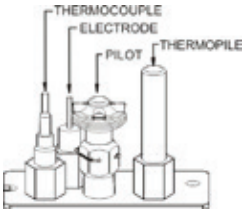

9. Push in control knob all the way and hold in. Repeatedly push the piezo ignitor button until the pilot is lit. Continue to hold the control knob in the for about one (1) minute after the pilot is lit. Release knob, and it will pop back up. Pilot should remain lit. If it goes out, repeat steps 5 through 9.
   - If the control knob does not pop up when released, STOP and IMMEDIATELY call a qualified service technician or gas supplier.
   - If the pilot will not stay lit after several tries, turn the gas control knob to “OFF” and call your service technician or gas supplier.
10. Turn gas control knob counterclockwise ↶ to “ON.”
11. Replace barrier assembly.
12. Turn on all electric power to the appliance (if applicable).
13. Set REMOTE/OFF/ON switch to desired setting.

TO TURN OFF GAS TO FIREPLACE

1. Set REMOTE/OFF/ON switch to OFF.
2. Turn off all electric power to the appliance if service is to be performed (if applicable).
3. Remove the barrier assembly to gain access to the control compartment.
4. Push in gas control knob slightly and turn clockwise ↷ to “OFF.” Do not force.
5. Replace the barrier assembly.

INTERMITTENT PILOT (DVC(20,26,28)IN7 MODELS) OPERATING INSTRUCTIONS

The OWNER should carefully read and follow these operating instructions at all times. Remove the barrier to view the gas controls for the fireplace insert.

The electronic control valve system includes the ability to switch the pilot from a standing pilot mode to an intermittent pilot mode.

- **IPI Mode** - In the Intermittent Pilot mode, when the unit is turned ON, it will cause spark to the pilot, light the pilot, then allow the burner to light. When the unit is turned to OFF, both the burner and pilot will be OFF.
- **CPI Mode** - In the Continuous Pilot mode, the pilot remains ON continuously even when the burner is turned OFF.

NOTICE: A small toggle switch is located on the front of the module tray that is used to switch from IPI (left position) to the CPI (right position). **See Figure G.**

When the unit is turned to ON, the electrical current will energize a spark to the pilot igniter. Once the pilot sensor heats up (after a few seconds), the valve will be energized, allowing gas to flow to the burner.

1. Follow the SAFETY and LIGHTING INSTRUCTIONS for Intermittent Pilot controls found in this manual, and on labels found in the control compartment located in the lower cavity of the appliance.
2. During the operating season (or in power outage periods), it is recommended that the pilot remain in the CPI (standing pilot mode) to reduce cold start issues, and/or conserve battery backup power during a power outage.

NOTICE: The gas control has a manual HI/LO flame adjustment knob (regulator) that allows you to increase or decrease the height of the burner flame. **See Figure G.** Rotate the HI/LO knob counterclockwise to “HI” to increase the flame height, and clockwise to “LO” to decrease the flame height.

OPTIONAL REMOTE CONTROLS

Optional remote controls are available for use with this appliance. Follow the instructions included with the remote control for programming and other operational information.

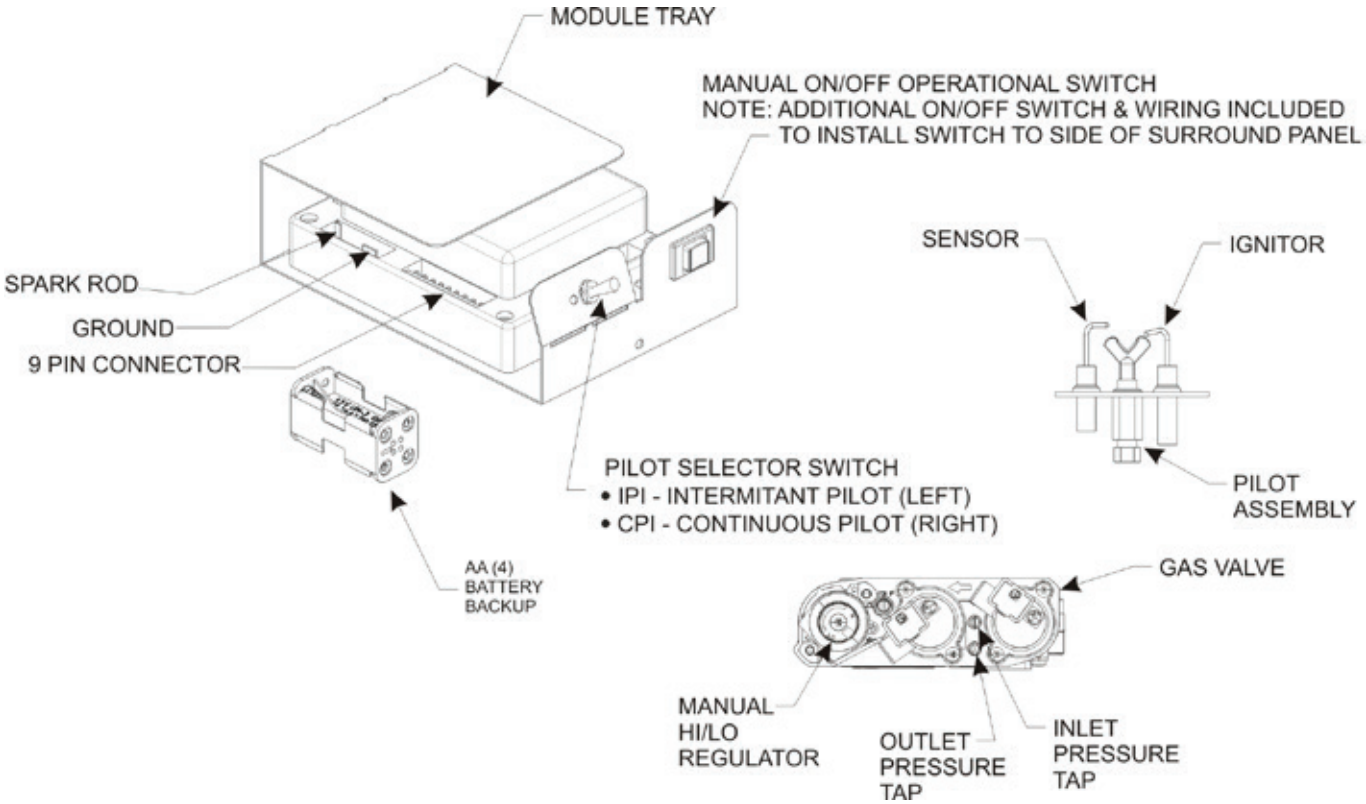

Figure 28

INTERMITTENT PILOT (DVC(20,26,28)IN7 MODELS) LIGHTING INSTRUCTIONS

FOR YOUR SAFETY READ BEFORE LIGHTING

⚠ WARNING: If you do not follow these instructions exactly, a fire or explosion may result causing property damage, personal injury or loss of life.

A. This appliance has a pilot which can be lighted with the manual on/off switch, a remote control, or by switching the remote receiver switch to the “ON” position. When lighting the pilot, follow these instructions exactly.

B. Before lighting smell all around the appliance area for gas. Be sure to smell next to the floor because some gas is heavier than air and will settle on the floor.

What To Do If You Smell Gas
- Do not try to light any appliance.
- Do not touch any electrical switch;
- Do not use any phone in your building.
- Immediately call your gas supplier from a neighbor's phone. Follow the gas supplier's instructions.
- If you cannot reach your gas supplier, call the fire department.

C. Use only the remote control or manual remote receiver switch to operate the gas valve. Never use tools. If valve does not operate, don’t try to repair it, call a qualified service technician. Force or attempted repair may result in a fire or explosion.

D. Do not use this appliance if any part has been under water. Immediately call a qualified service technician to inspect the appliance and to replace any part of the control system and any gas control which has been under water.

LIGHTING INSTRUCTIONS

1. STOP! Read the safety information above.
2. Turn OFF electric power to the appliance.
3. Remove front surround panel assembly or bottom louver if included.
4. Turn gas shut-off valve counterclockwise to “On” position.
5. Wait ten minutes to clear out any gas. Then smell for gas, including near the floor. If you smell gas, STOP! Follow “B” in the safety information above on this page. If you do not smell gas, go to the next step.
6. Turn ON electric power to the appliance.
7. Find pilot - Follow metal tube from gas control. The pilot is behind the burner on the right side.
8. Turn main flame to on. If the pilot does not light within 60 seconds, stop and go to Step 5.
9. Refer to remote control instructions for detailed information, control features, and operation. ***NOTICE***: There is a CPI/IPI switch behind the right side panel that allows for a continuous standing pilot mode or an intermittent pilot mode. See appliance manual for location of this switch. If the pilot or burner does not stay lit (in the standing pilot mode), stop and immediately call a qualified service technician or gas supplier.
10. If the burner or pilot does not operate properly after several tries, turn the gas shut-off valve clockwise to “OFF” and call your service technician or gas supplier.
11. Replace the front surround assembly or close bottom louver assembly (if applicable).
12. Operation of the gas valve is controlled by a manual on/off switch or a hand held remote control. Refer to remote instructions for detailed operation information.

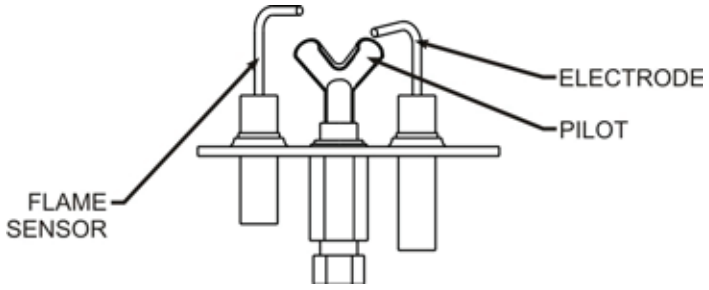

Shut-off valve

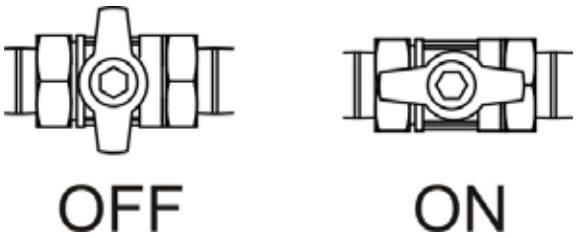

TO TURN OFF GAS TO FIREPLACE

1. Set REMOTE/OFF/ON switch to OFF.
2. Turn off all electric power to the appliance if service is to be performed (if applicable).
3. Turn gas shut off valve to “OFF” position.

IMPORTANT SAFETY INFORMATION

⚠ WARNING

Read and follow these safety precautions prior to operating this appliance. Failure to follow these precautions may result in death, injury, or property damage.

Do not operate this appliance without the glass door installed.

⚠ WARNING

Do not operate this fireplace insert with glass doors closed.

- Do not use this appliance if any part has been under water. Immediately call a qualified service technician to inspect the appliance and to replace any part of the control system and any gas control which has been under water.
- In the event of a natural disaster (tornado, earthquake, fire, etc.) have a qualified technician inspect the heater for damage or potential gas leaks.

- Alert people – and especially children – to the hazards of high surface temperatures. This heater may become hot enough to burn skin and ignite clothing after prolonged contact. To prevent injury, caution people to stay clear and avoid touching the heater.
- Carefully supervise young children when they are in the same room as the fireplace insert. Toddlers, young children, and others may be susceptible to accidental contract burns. A physical barrier is recommended if there are at-risk individuals in the house. To restrictor access to a fireplace or stove, install an adjustable safety gate to keep toddlers, young children, and other at-risk individuals out of the room and away from hot surfaces.
- The vent cap located on the outside of your home, will become very hot. Alert everyone, adults and children, to stay clear and avoid touching the vent cap. Keep the area around the vent cap clear of combustibles, including shrubs and trees.

- Replace any safety screen, guard, or barrier removed to service the fireplace insert prior to operating the appliance.
- Replace a damaged barrier with one tested and approved for this fireplace insert.
- A barrier designed to reduce the risk of burns from the hot viewing glass is provided with this appliance and must be installed for the protection of children and other at-risk individuals.

- Do not place clothing or other flammable materials (solids, vapors or liquids) on or near the appliance.
- This fireplace insert requires an unimpeded flow of air to circulate warm air. Do not place objects on or around the fireplace insert that may restrict air flow to or from the fireplace insert.

APPLIANCE SERVICE HISTORY

Date	Dealer Name	Service Technician Name	Service Performed/Notes

WARRANTY

Empire Comfort Systems Inc. warranties this hearth product to be free from defects at the time of purchase and for the periods specified below. Hearth products must be installed by a qualified technician and must be maintained and operated safely, in accordance with the instructions in the owner's manual. This warranty applies to the original purchaser only and is not transferable. All warranty repairs must be accomplished by a qualified gas appliance technician.

Limited Lifetime Parts Warranty – Combustion Chamber, Heat Exchanger, and Factory-Installed Glass

- If the combustion chamber, heat exchanger (see parts list) or factory-installed glass fails because of defective workmanship or material, Empire will repair or replace at Empire's option.

Limited Three-Year Parts Warranty – All Other Components
(Except Remote Controls, Thermostats, Accessories and Replacement Parts)

- Should any part fail because of defective workmanship or material within three years from the date of purchase, Empire will repair or replace at Empire's option..

Limited One-Year Parts Warranty – Remote Controls, Thermostats, Accessories, and Parts

- Should any remote control, thermostat, accessory, or other part fail because of defective workmanship within one year from the date of purchase, Empire will repair or replace at Empire's option.

Duties Of The Owner

- The appliance must be installed by a qualified installer and operated in accordance with the instructions furnished with the appliance.
- A bill of sale, cancelled check, or payment record should be kept to verify purchase date and establish warranty period.
- Ready access to the appliance for service.

What Is Not Covered

- Damages that might result from the use, misuse, or improper installation of this appliance.
- Travel, diagnostic costs and freight charges on warranted parts to and from the factory.
- Claims that do not involve defective workmanship or materials.
- Unauthorized service or parts replacements.
- Removal and reinstallation cost.
- Inoperable due to improper or lack of maintenance.

How To Get Service

- To make a claim under this warranty, please have your receipt available and contact your installing dealer. Provide the dealer with the model number, serial number, type of gas, and purchase verification. The installing dealer is responsible for providing service and will contact the factory to initiate any warranted parts replacements. Empire will make replacement parts available at the factory. Shipping expenses are not covered.
- If, after contacting your Empire dealer, service received has not been satisfactory, contact: Consumer Relations Department, Empire Comfort Systems Inc., PO Box 529, Belleville, Illinois 62222, or send an e-mail to info@empirecomfort.com with "Consumer Relations" in the subject line.

Your Rights Under State Law

- This warranty gives your specific legal rights, and you may also have other rights, which vary from state to state.

Empire Comfort Systems Inc.
Belleville, Illinois

If you have a general question about our products, please e-mail us at info@empirecomfort.com.

If you have a service or repair question, please contact your dealer.

www.empirecomfort.com