This Owner's Manual is provided and hosted by Appliance Factory Parts.

Appliance Factory Parts
Experts in BBQ, Humidifier, & Appliance Parts
1-800-955-7075

American Hearth DVCX36 Owner's Manual

Shop genuine replacement parts for American Hearth DVCX36

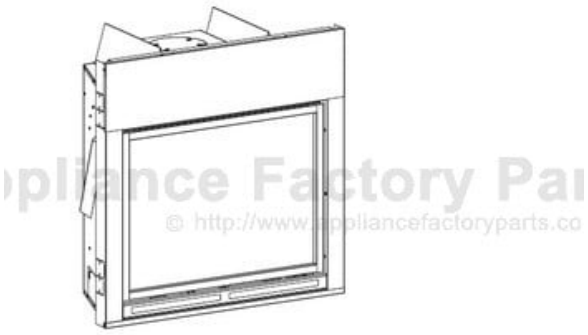

Find Your American Hearth Fireplace Parts - Select From 88 Models

-------- Manual continues below --------

AMERICAN HEARTH

INSTALLATION INSTRUCTIONS AND OWNER'S MANUAL

INSTALLER: Leave this manual with the appliance.
CONSUMER: Retain this manual for future reference.

⚠ WARNING

If not installed, operated and maintained in accordance with the manufacturer's instructions, this product could expose you to substances in fuel or from fuel combustion which can cause death or serious illness.

⚠ WARNING

FIRE OR EXPLOSION HAZARD
Failure to follow safety warnings exactly could result in serious injury, death or property damage.

- **Do not store or use gasoline or other flammable vapors and liquids in the vicinity of this or any other appliance.**
- **WHAT TO DO IF YOU SMELL GAS**
  - **Do not try to light any appliance.**
  - **Do not touch any electrical switch; do not use any phone in your building.**
  - **Leave the building immediately.**
  - **Immediately call your gas supplier from a neighbor's phone. Follow the gas supplier's instructions.**
  - **If you cannot reach your gas supplier, call the fire department.**
- **Installation and service must be performed by a qualified installer, service agency or the gas supplier.**

DIRECT VENT ZERO CLEARANCE GAS FIREPLACE HEATER MODEL SERIES:

MULTIFUNCTION REMOTE (MF)

ADVCX(36,42)FP91(N,P)-1

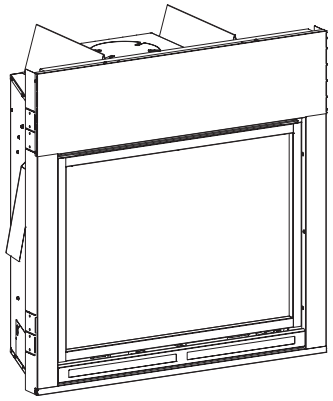

MH30033

GAS-FIRED
C UL US
LISTED

This appliance may be installed in an aftermarket, permanently located, manufactured home (USA only) or mobile home, where not prohibited by state or local codes.

This appliance is only for use with the type of gas indicated on the rating plate. This appliance is not convertible for use with other gases, unless a certified kit is used.

⚠ WARNING

HOT GLASS WILL CAUSE BURNS.
DO NOT TOUCH GLASS UNTIL COOLED.
NEVER ALLOW CHILDREN TO TOUCH GLASS.

A barrier designed to reduce the risk of burns from the hot viewing glass is provided with this appliance and shall be installed for the protection of children and other at-risk individuals.

Note: Barrier required, but may be sold separately.

NATIONAL FIREPLACE INSTITUTE
NFI
CERTIFIED
www.nficertified.org

We suggest that our gas hearth products be installed and serviced by professionals who are certified in the U.S. by the National Fireplace Institute® (NFI) as NFI Gas Specialists.

BEFORE YOU START

1. Read the safety information on Pages 60 - 61.
2. If located in the Commonwealth of Massachusetts, please note the special requirements on Page 62.
3. Where are you going to install the unit? See Page 14.
4. Frame the opening. See Page 15.
5. Install the gas lines. See Page 13.
6. Install the wiring. See Pages 14 and 45.
7. Install the venting. See Pages 19 - 24.
8. Install the fireplace. See Pages 15 - 18.
9. Connect the gas. See Pages 13.
10. Install the logs. See Pages 31 - 43.
11. Light the fireplace and troubleshoot. See Pages 44 and 58 - 59.
12. Install trim and other accessories. See Page 7.
13. Show the homeowner how to operate the fireplace.
14. Show the homeowner how to do the basic maintenance.

TABLE OF CONTENTS

SECTION	PAGE
CARTON CONTENTS	4
INTRODUCTION	5
SPECIFICATIONS	6
HARDWARE PACKAGE	7
ACCESSORIES	7
FIREPLACE DIMENSIONS	8
CLEARANCES	9-10
COMBUSTIBLE MATERIAL	10
VENT TERMINATION CLEARANCES	11
VENT TERMINATION CLEARANCES	12
GAS SUPPLY	13
LOCATING FIREPLACE	14
ELECTRICAL CONSIDERATIONS	14
INSTALLATION	15 - 18
VENT SYSTEM IDENTIFICATION	19
VENT SYSTEMS	19
VENTING FIREPLACE	20 - 22
TOP VENT - HORIZONTAL TERMINATION	23
TOP VENT - VERTICAL TERMINATION	24
VERTICAL TERMINATION	25 - 26
FRAMING AND FINISHING	27 - 28
DVVK-5F FLEX VENT INSTRUCTIONS	29 - 30
LINER PLACEMENT	31
GLOWING EMBERS	31
LOG IDENTIFICATION	32
LOG PLACEMENT	33 - 43
LIGHTING INSTRUCTIONS	44
IPI SYSTEM WIRING DIAGRAM	45
REMOTE CONTROL OPERATION INSTRUCTIONS	46 - 51
INTERMITTENT PILOT PARTS VIEW	52
INTERMITTENT PILOT PARTS LIST	53
FIREPLACE - ALL UNITS PARTS VIEW	54
FIREPLACE - ALL UNITS PARTS LIST	55
MAINTENANCE AND SERVICE	56 - 57
CONTROL SYSTEM TROUBLESHOOTING	58 - 59
IMPORTANT SAFETY INFORMATION	60
SAFETY INFORMATION FOR USERS OF LP GAS	61
REQUIREMENTS FOR MASSACHUSETTS	62
MASTER PARTS DISTRIBUTOR LIST	63
HOW TO ORDER REPAIR PARTS	63
WARRANTY	64

CARTON CONTENTS

1

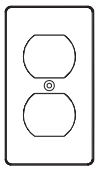

2

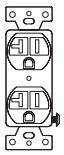

3

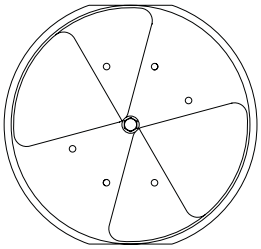

NAT

4

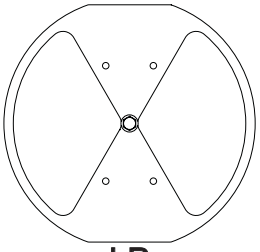

LP

4

5

6

7

8

INDEX NUMBER	DESCRIPTION	QTY SUPPLIED
1	Rock Wool	2
2	Receptical Cover	2
3	Receptical	2
4	Flue Restrictor Assembly - NAT or LP	1
5	Hardware Pack	1
6	AA Battery	4
7	AAA Battery	3
8	Remote	1
Not Shown	Log Set (see Page 32)	1 set
Not Shown	Fireplace	1
Not Shown	Accessory Sheet	1
Not Shown	Product Registration Card	1

See Parts Lists on Pages 52 - 55 for ordering replacement parts. Do not order batteries, bolts, screws, washers or nuts. They are standard hardware items and can be purchased at any local hardware store.

INTRODUCTION

Instructions to Installer

1. Installer must leave instruction manual with owner after installation.
2. Installer must have owner fill out and mail product registration card supplied with the fireplace.
3. Installer should show owner how to start and operate the fireplace.

This direct vent gas fireplace heater is designed to operate with all combustion air being siphoned from the outside of the building and all exhaust gases expelled to the outside of the building. The information contained in this manual pertains to all models and gas control systems unless otherwise noted.

Appliance Certification

⚠ WARNING
This unit is not for use with solid fuels.

This fireplace is design certified in accordance with American National Standard/CSA Standard ANSI Z21.88/CSA 2.33 and by Underwriters Laboratories as a Direct Vent Gas Fireplace Heater and shall be installed according to these instructions.

Consult your local building code agency, prior to installation, to ensure compliance with local codes-including permits and inspections.

The fireplace, when installed, must be electrically grounded in accordance with local codes or, in absence of local codes, with the *National Electric Code ANSI/NFPA 70* or Canadian Electric code, CSA C22.1, if an external electrical source is utilized.

These models may be installed in a bedroom or bed-sitting room in the U.S.A. and Canada.

Qualified Installing Agency

Installation and replacement of gas piping, gas utilization equipment or accessories and repair and servicing of equipment shall be performed only by a qualified agency. The term "qualified agency" means any individual, firm, corporation or company which either in person or through a representative is engaged in and is responsible for (a) the installation or replacement of gas piping or (b) the connection, installation, repair or servicing of equipment, who is experienced in such work, familiar with all precautions required and has complied with all the requirements of the authority having jurisdiction.

Commonwealth of Massachusetts: The installation must be made by a licensed plumber or gas fitter in the Commonwealth of Massachusetts.

⚠ WARNING
ANY CHANGE TO THIS FIREPLACE OR ITS CONTROLS CAN BE DANGEROUS. **Improper installation or use of the fireplace can cause serious injury or death from fire, burns, explosions, or carbon monoxide poisoning.**

The installation must conform with local codes or, in the absence of local codes, with the *National Fuel Gas Code ANSI Z223.1/NFPA 54* Natural Gas and Propane Installation Code, or CSA B149.1 in Canada.* **Available from the American National Standards Institute, Inc. 11 West 42nd St., New York, N.Y. 10036.*

Any alteration of the original design, installed other than as shown in these instructions or use with a type of gas not shown on the rating plate is the responsibility of the person and company making the change.

Important

All correspondence should refer to complete Model Number, Serial Number and type of gas.

High Altitude

When installing this unit at an elevation above 2000 feet (in the United States) it may be necessary to decrease the input rating by changing the existing burner orifice to a smaller size. Generally, input should be reduced 4 percent for each 1000 feet above sea level. However, if the heating value of the gas has been reduced, this general rule may not apply. Check with Empire Comfort Systems for proper orifice size identification.

Canadian High Altitude

Altitude: 0-4500 feet (0-1370 m)

When installing this unit at an elevation above 4500 feet (in Canada), check with Empire Comfort Systems.

Consult your Empire Comfort Systems for assistance in determining the proper orifice for location.

Preparation

This direct vent gas fireplace and its components are tested and safe when installed in accordance with this Installation Manual. Report to your dealer any parts damaged in shipment, specifically check glass condition. Do not install unit with damaged, incomplete, or substitute parts. Read all instructions before starting installation and follow these instructions carefully during installation to insure maximum benefit and safety. Failure to follow them will void your warranty and may present a fire hazard.

The warranty will be voided by, and the warranter disclaims any responsibility for the following actions:

- Installation of any damaged fireplace or vent system component.
- Modification of the fireplace or direct vent system.
- Installation other than as instructed by Empire Comfort Systems Inc.
- Improper positioning of the logs, glass door or decorative rock.
- Installation and/or use of any component part not manufactured or approved by manufacturer.

SPECIFICATIONS

	ADVCX36NAT	ADVCX36LP	ADVCX42NAT	ADVCX42LP
Input BTU/Hr Maximum	37,000	34,000	40,000	36,000
Input BTU/Hr Minimum	26,000	27,000	27,000	29,000
KWH (Maximum)	10.84	9.96	11.72	10.55
KWH (Minimum)	7.62	7.91	7.91	8.5
Orifice (Front / Rear)	47 / 42	58 / 1.45	44 / 40	57 / 1.45
Air Shutter Opening	3/16	FULL OPEN	3/16	FULL OPEN
Height without standoff	36-7/8	36-7/8	36-7/8	36-7/8
Width	39-5/16	39-5/16	43-5/16	43-5/16
Depth	21-1/16	21-1/16	21-1/16	21-1/16
Gas Inlet Shutoff Valve (pipe)	1/2 NPT	1/2 NPT	1/2 NPT	1/2 NPT
Vent Size	5 x 8	5 x 8	5 x 8	5 x 8

NOTE: Air shutter settings are factory minimum settings. Some venting configurations may require minor air shutter adjustments for optimum performance.

NOTE: The glass used in your fireplace is ceramic glass. If the glass is cracked or damaged in any way, it should be replaced only with a complete glass frame assembly from Empire. See parts list on Pages 52 - 55 for ordering.

GAS SUPPLY PRESSURES			
GAS TYPE	MAXIMUM	MINIMUM	MANIFOLD
NAT	14	4.5	3.5
LP	14	11	10

NOTE: For gas pipe dimensions, see Page 13.

HARDWARE PACKAGE

HEX HEAD SCREW 10 X 1/2

ACCESSORIES

The following parts can be obtained from your Empire Comfort Systems dealer. Contact your Empire Dealer for more accessory options. If you need additional information beyond what your dealer can furnish, contact Empire Comfort Systems Inc., 918 Freeburg Ave., Belleville, Illinois 62220-2623.

Model Number	Description	Used On
DF362NB	Beveled Window Frame, Brushed Nickel	ADVCX36
DF422NB	Beveled Window Frame, Brushed Nickel	ADVCX42
DF362BZ	Beveled Window Frame, Oil Rubbed Bronze	ADVCX36
DF422BZ	Beveled Window Frame, Oil Rubbed Bronze	ADVCX42
DVD36XBLNB	Decorative Door, Brushed Nickel	ADVCX36
DVD42XBLNB	Decorative Door, Brushed Nickel	ADVCX42
DVP36XCB	Ceramic Fiber Liner, Cottage Brick	ADVCX36
DVP42XCB	Ceramic Fiber Liner, Cottage Brick	ADVCX42
DVP36XTS	Ceramic Fiber Liner and Floor, Traditional Stone	ADVCX36
DVP42XTS	Ceramic Fiber Liner and Floor, Traditional Stone	ADVCX42
DVP36XKR	Reflective Liner, Black	ADVCX36
DVP42XKR	Reflective Liner, Black	ADVCX42
DVF36XKR	Reflective Floor, Black	ADVCX36
DVF42CXR	Reflective Floor, Black	ADVCX42
DCA1ABL	Decorative Forged Andirons, Black	ADVCX(36,42)

Conversion Kits	Description	Used On
35401	Conversion Kit, DV (Natural to Propane)	DVCX36FP91
35402	Conversion Kit, DV (Propane to Natural)	DVCX36FP91
35403	Conversion Kit, DV (Natural to Propane)	DVCX42FP91
35404	Conversion Kit, DV (Propane to Natural)	DVCX42FP91

FIREPLACE DIMENSIONS

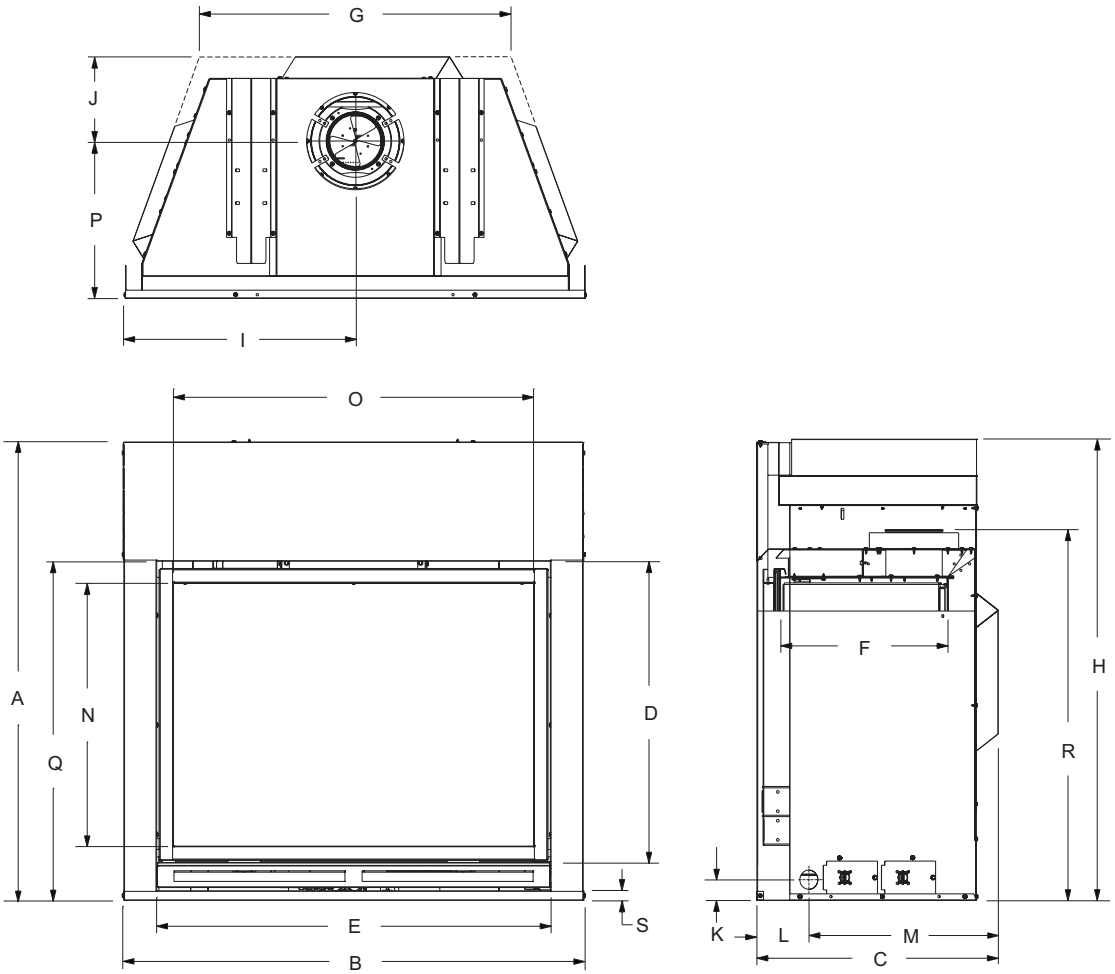

INDEX LETTER	DIMENSION DESCRIPTION	DIMENSIONS (in inches)	
		ADVCX36FP	ADVCX42FP
A	The maximum height of firebox face (excluding standoffs)	41-7/8	41-7/8
B	The maximum width of the firebox face (excluding nailing flanges)	42-1/4	46-1/4
C	The maximum depth of the firebox	22-1/16	22-1/16
D	The height of the firebox opening	27-1/2	27-1/2
E	The width of the firebox opening	35-9/16	39-15/16
F	The interior depth of the firebox	15-1/4	15-1/4
G	The rear exterior width of the firebox	28-3/8	32-3/8
H	The height to the firebox standoffs	42-1/8	42-1/8
I	Width from the left side of the box to the centerline of vent	19-1/8	23-1/8
J	Depth from back of box to centerline of top vent	7-11/16	7-11/16
K	Height from the bottom of the box to the gas line opening	2	2
L	Depth from the front of the box to gas line opening	4-1/2	4-1/2
M	Depth from rear of box to gas line opening	10-7/8	10-7/8
N	Glass frame opening height	24	24
O	Glass frame opening width	32-7/8	36-7/8
P	Depth from front of box to centerline of vent	14-3/8	14-3/8
Q	Distance from floor to fireplace opening	31	31
R	Height from floor to vent collar	33-9/16	33-9/16
S	Maximum hearth size	1	1

CLEARANCES

Clearance to Combustibles	
Back Stand-off	0" (0 mm)
Side Stand-off	0" (0 mm)
Floor	0" (0 mm)
Top Stand-off	0" (0 mm)
Top Framing Edge	6” (152 mm)

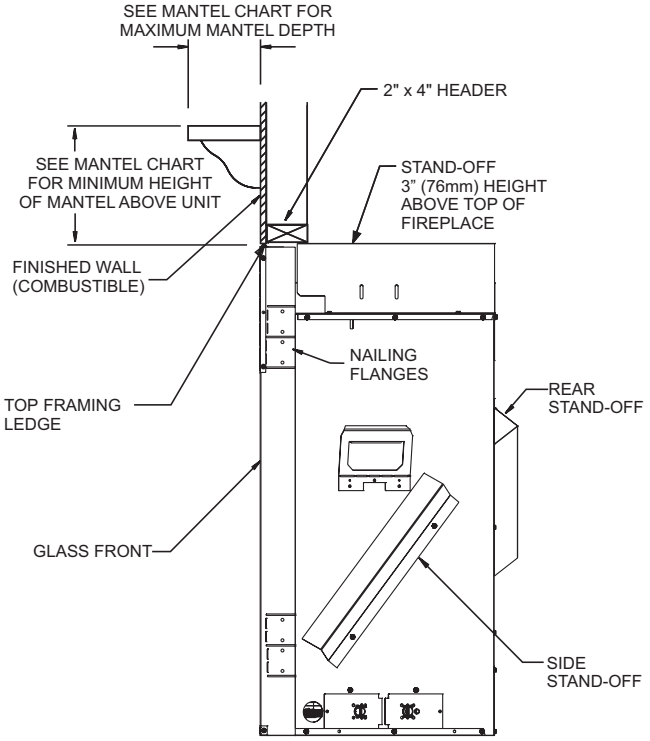

Figure 1
Note: Generic Firebox shown.

Mantel Chart

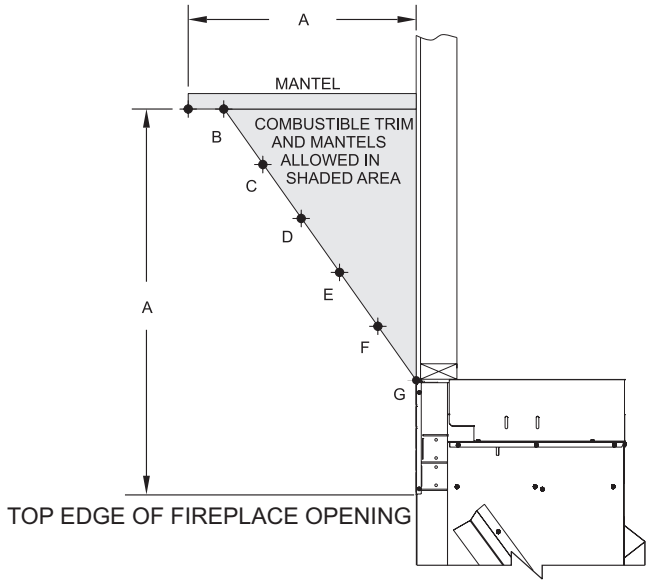

INDEX LETTER	DIMENSIONS (in inches)	
	DISTANCE FROM TOP EDGE OF FIREPLACE OPENING (HORIZONTAL)	DISTANCE FROM FIREPLACE FRONT (VERTICAL)
A	12	25-1/2
B	10	25-1/2
C	8	23-3/4
D	6	22-1/8
E	4	20-3/8
F	2	18-3/4
G	0	17

Figure 2

CLEARANCES

⚠ WARNING

This fireplace has not been tested nor approved to have a television or other electrical appliance installed above it.

Clearance from bottom of fireplace to ceiling is 84 inches. Clearance from side of fireplace to adjacent sidewall is 6 inches.

Television Considerations

Installing a television above a fireplace has become increasingly popular; however, the area above any fireplace gets hot and most TV manufacturers recommend against placing their products near a heat source.

If you install a television above this fireplace, Empire Comfort Systems accepts no responsibility for damage or injuries. Follow the television manufacturer's installation instructions, including any recommendations regarding proximity to heat sources.

If you have a TV above your fireplace, turn off the fireplace and let it cool completely before servicing or touching any buttons on the TV.

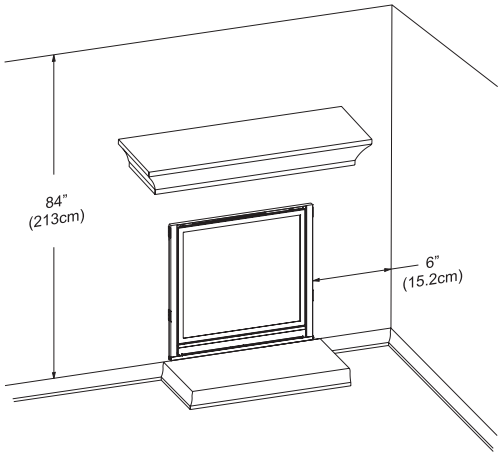

Figure 3

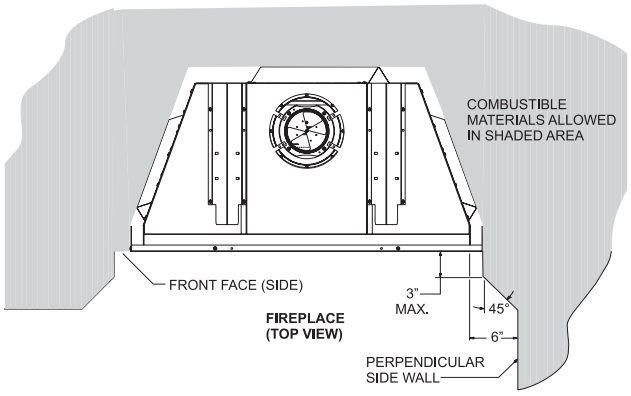

Figure 4

COMBUSTIBLE MATERIAL

Do not attach combustible material to the mantel of your fireplace. This is a fire hazard.

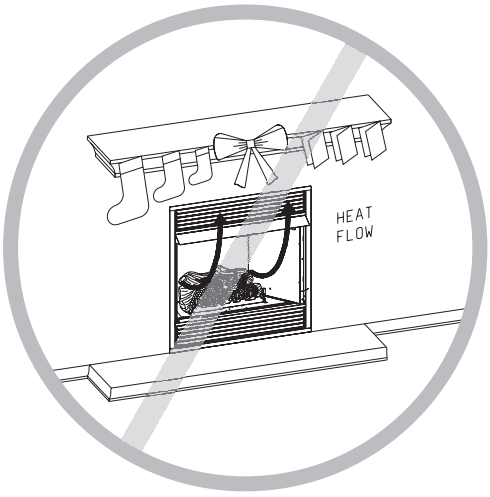

Figure 5
NOTE: Generic Firebox shown.

No greeting cards, stockings or ornamentation of any type should be placed on or attached to the fireplace. This is a heating appliance. The flow of heat can ignite combustibles.

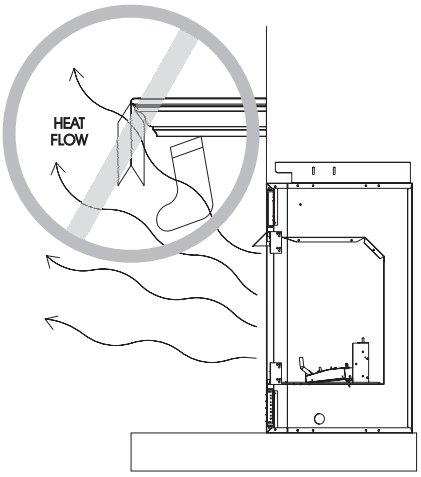

Figure 6
NOTE: Generic Firebox shown.

VENT TERMINATION CLEARANCES

Termination clearance for buildings with combustible and noncombustible exteriors.

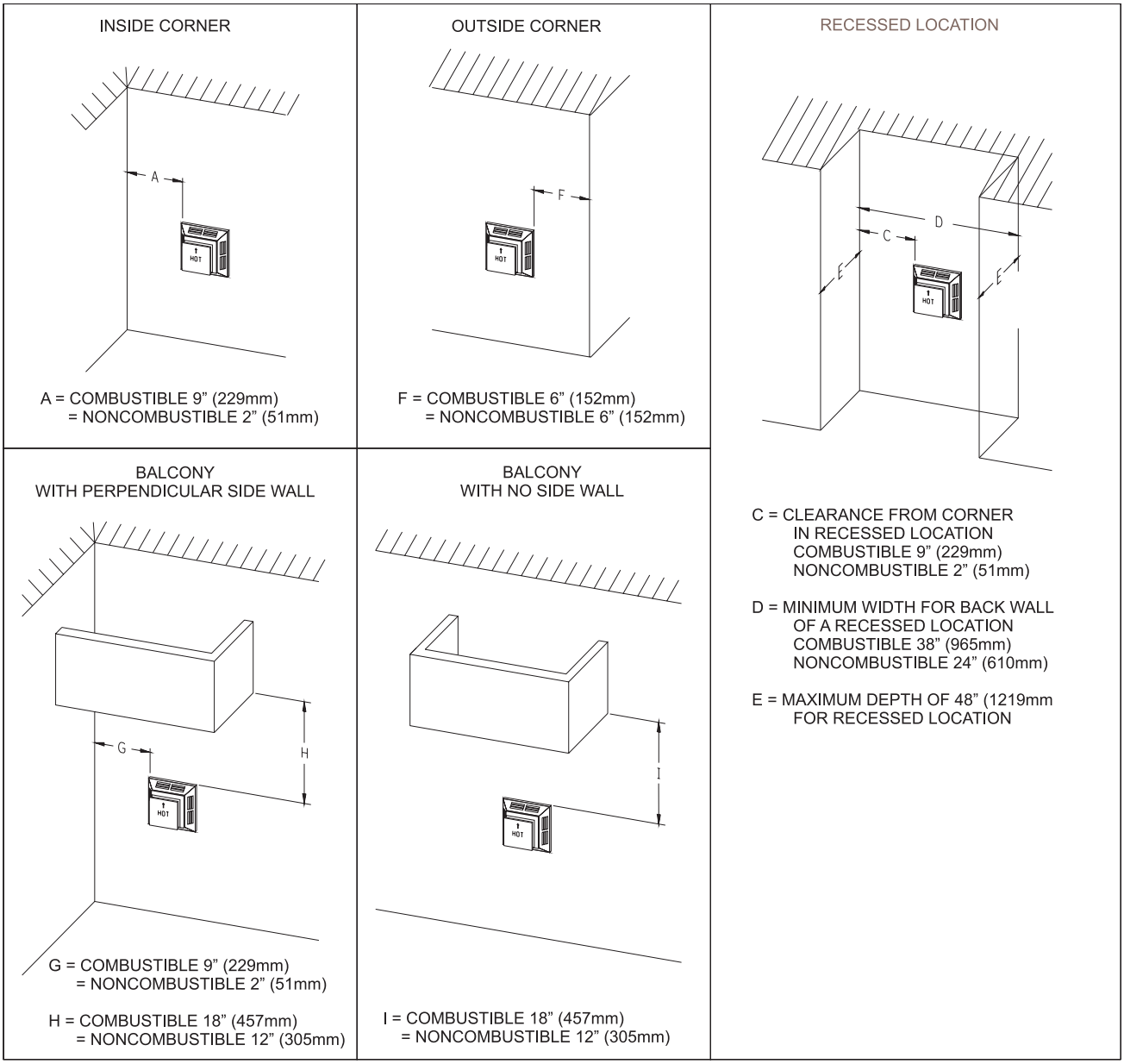

Figure 7

Vertical Sidewall Installations

Important! Minimum clearance between vent pipes and combustible materials is 3 inches (76 mm) on top, and 1 inch (25 mm) on bottom and sides.

Important! When vent termination exits through foundation less than 20 inches (508 mm) below siding outcrop, the vent pipe must extend outward so that the horizontal vent termination is located flush to, or beyond the outcrop siding.

Information on Various Venting Routes and Components

Important: It is always best to locate the fireplace in such a way that minimizes the number of offsets and horizontal vent length.

Since it is very important that the venting system maintain its balance between the combustion air intake and the flue gas exhaust, certain limitations as to vent configurations apply and must be strictly adhered to.

The graph showing the relationship between vertical and horizontal side wall venting will help to determine the various vent lengths allowable.

The horizontal vent run refers to the total length of vent pipe from the flue collar of the fireplace to the face of the outer wall.

The maximum horizontal vent run is 20 feet (6.10 m) when the vertical vent rise is 8 feet (2.44 m). **See Page 22, Figure 33.**

Venting termination shall not be recessed into wall or siding.

ATTENTION: Vinyl Soffit, Vinyl Ceiling, Vinyl Overhang Disclaimer
Clearances are to heat resistant material (i.e. wood, metal). This does not include vinyl. Empire Comfort Systems Inc. will not be held responsible for heat damage caused from terminating under vinyl overhangs, vinyl ceilings or vinyl ventilated/unventilated soffits.

VENT TERMINATION CLEARANCES

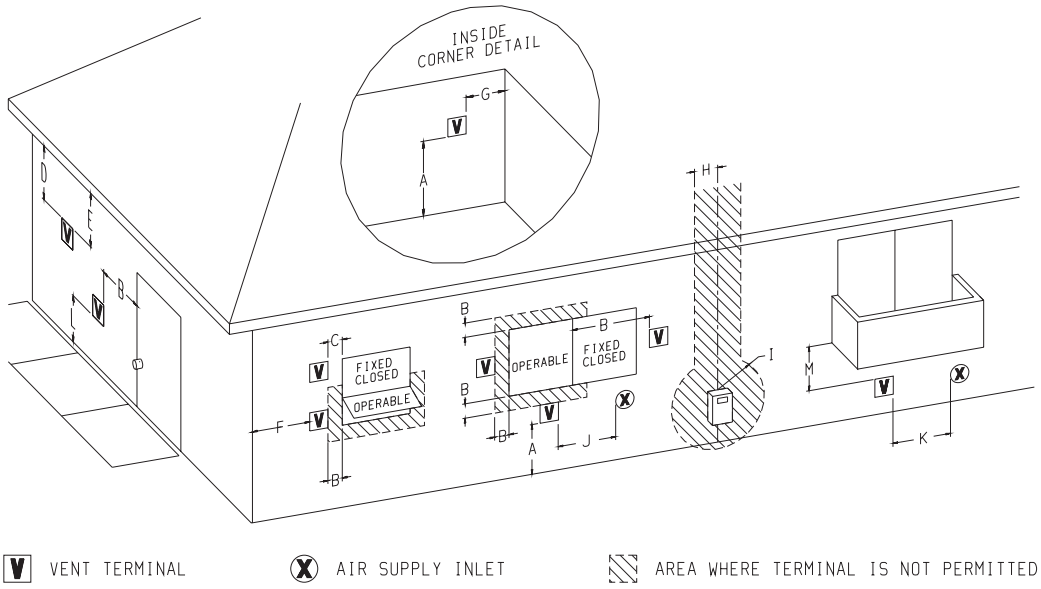

	Canadian Installations1	US Installations2
A= Clearance above grade, veranda, porch, deck, or balcony	12 in (30 cm)	12 in (30cm)
B= Clearance to window or door that may be open	6 in (15 cm) for appliances ≤ 10,000 Btuh (3 kW), 12 in (30 cm) for appliances > 10,000 Btuh (3 kW) and ≤ 100,000 Btuh (30 kW), 36 in (91 cm) for appliances > 100,000 Btuh (30 kW)	6 in (15 cm) for appliances ≤ 10,000 Btuh (3 kW), 9 in (23 cm) for appliances > 10,000 Btuh (3 kW) and ≤ 50,000 Btuh (15 kW), 12 in (30 cm) for appliances > 50,000 Btuh (15 kW)
C= Clearance to permanently closed window	12 in (30 cm)	12 in (30 cm)
D= Vertical clearance ventilated soffit located above the terminal within a horizontal distance of 2 feet (61 cm) from the center line of the terminal	24 in (61 cm)	24 in (61 cm)
E= Clearance to unventilated soffit	12 in (30 cm)	12 in (30 cm)
F= Clearance to outside corner	6 in (15 cm)	6 in (15 cm)
G= Clearance inside corner	9 in (23 cm)	9 in (23 cm)
H= Clearance to each side of center line extended above meter/regulator assembly	3 ft (91 cm) within a height 15 ft (4.5 m) above the meter/regulator assembly	3 ft (91 cm)

ATTENTION: Vinyl Soffit, Vinyl Ceiling, Vinyl Overhang Disclaimer
Clearances are to heat resistant material (i.e. wood, metal). This does not include vinyl. Empire Comfort Systems Inc. will not be held responsible for heat damage caused from terminating under vinyl overhangs, vinyl ceilings or vinyl ventilated/unventilated soffits.

	Canadian Installations1	US Installations2
I= Clearance to service regulator vent outlet	3 ft (91 cm)	6 ft
J= Clearance to nonmechanical air supply inlet to building or the combustion air inlet to any other appliance	6 in (15 cm) for appliances ≤ 10,000 Btuh (3 kW), 12 in (30 cm) for appliances > 10,000 Btuh (3 kW) and ≤ 100,000 Btuh (30 kW), 36 in (91 cm) for appliances > 100,000 Btuh (30 kW)	6 in (15 cm) for appliances ≤ 10,000 Btuh (3 kW), 9 in (23 cm) for appliances > 10,000 Btuh (3 kW) and ≤ 50,000 Btuh (15 kW), 12 in (30 cm) for appliances > 50,000 Btuh (15 kW)
K= Clearance to a mechanical air supply inlet	6 ft (1.83 m)	3 ft (91 cm) above if within 10 ft (3 m) horizontally
L= Clearance above paved sidewalk or paved driveway located on public property	7 ft (2.13 m) †	7 ft (2.13 m) †
M= Clearance under veranda, porch deck, or balcony	12 in (30 cm) ‡	12 in (30 cm) ‡

1	In accordance with the current CSA B149.1, Natural Gas and Propane Installation Code
2	In Accordance with the current ANSI Z223.1/NFPA 54, National Fuel Gas Code
†	A vent shall not terminate directly above a sidewalk or paved driveway that is located between two single family dwellings and serves both dwellings
‡	Permitted only if veranda,, porch, deck, or balcony is fully open on a minimum of two sides beneath the floor.
*	For clearances not specified in ANSI Z223.1/NFPA 54 or CSA B149.1, one of the following shall be indicated:
a)	A minimum clearance value determined by testing in accordance with section 2.23.5, or;
b)	A reference to the following footnote: “Clearance in accordance with local installation codes and the requirements of the gas supplier.”

Figure 8

GAS SUPPLY

The gas pipeline can be brought in through the right or left side of the appliance. Consult the current National Fuel Gas Code, ANSI Z223.1 CAN/CGA-B149 (.1 or .2) installation code.

Recommended Gas Pipe Diameter

Pipe Length	Schedule 40 Pipe Inside Diameter		Tubing, Type L Outside Diameter	
	Nat.	L.P.	Nat.	L.P.
0-10 feet	1/2”	3/8”	1/2”	3/8”
10-40 feet	1/2”	1/2”	5/8”	1/2”
40-100 feet	1/2”	1/2”	3/4”	1/2”
100-150 feet	3/4”	1/2”	7/8”	3/4”

Note: Never use plastic pipe. Check to confirm whether your local codes allow copper tubing or galvanized.
Note: Since some municipalities have additional local codes, it is always best to consult your local authority and installation code.
The use of the following gas connectors is recommended:

— ANSI Z21.24 Appliance Connectors of Corrugated Metal Tubing and Fittings.
— ANSI Z21.45 Assembled Flexible Appliance Connectors of Other Than All-Metal Construction

The above connectors may be used if acceptable by the authority having jurisdiction. The state of Massachusetts requires that a flexible appliance connector cannot exceed three feet in length.

FLEXIBLE GAS LINE CONNECTION

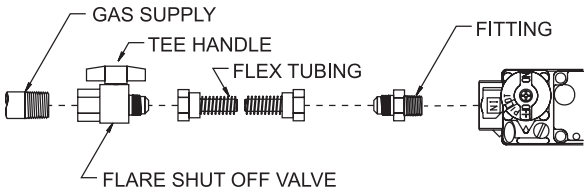

Figure 9

	Gas Supply Pressure (inches w.c.)		
	Minimum	Normal	Maximum
Natural Gas	4.5"	7.0"	14.0"
LP (Propane)	11”	11.0"	14.0"
	Manifold Pressure (inches w.c.)		
	Normal (HI)		
Natural Gas	3.5"		
LP (Propane)	10.0"		

Installing a New Main Gas Cock (Check Local Code)
Each appliance should have its own manual gas cock.
A manual main gas cock should be located in the vicinity of the unit. Where none exists, or where its size or location is not adequate, contact your local authorized installer for installation or relocation. Compounds used on threaded joints of gas piping shall be resistant to the action of liquefied petroleum gases. The gas lines must be checked for leaks by the installer. This should be done with a soap solution watching for bubbles on all exposed connections, and if unexposed, a pressure test should be made.

Never use an exposed flame to check for leaks. Appliance must be disconnected from piping at inlet of control valve and pipe capped or plugged for pressure test. Never pressure test with appliance connected; control valve will sustain damage!

The appliance and its individual shut off valve must be disconnected from supply piping system during any pressure testing of that system at test pressures in excess of 1/2 psig (3.5 kPa).
The appliance must be isolated from the gas supply piping system by closing its individual manual shut off valve during any pressure testing of the gas supply piping system at test pressures equal to or less than 1/2 psig (3.5 kPa).
Attention! If one of the procedures results in pressures in excess of 1/2 psig (14” w.c.) (3.5 kPa) on the fireplace gas valve, it will result in a hazardous condition.

Checking Manifold Pressures
Both Propane and Natural gas valves have a built-in pressure regulator in the gas valve. Natural gas models will have a manifold pressure of approximately 3.5 inch w.c. (.871 kPa) at the valve outlet with the inlet pressure to the valve from a minimum of 4.5 inch w.c. (1.120 kPa) for the purpose of input adjustment to a maximum of 14.0 inch w.c. (3.484 kPa). Propane gas models will have a manifold pressure approximately 10.0 inch w.c. (2.49 kPa) at the valve outlet with the inlet pressure to the valve from a minimum of 10.8 inch w.c. (2.68 kPa) for the purpose of input adjustment to a maximum of 14.0 inch w.c. (3.484 kPa).

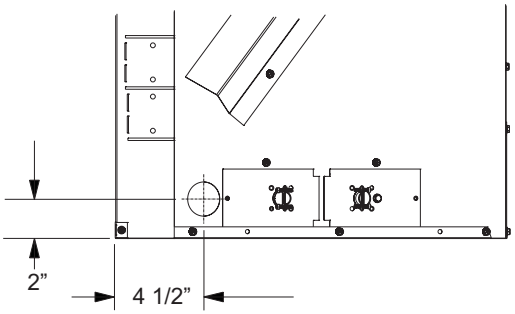

Figure 10

LOCATING FIREPLACE

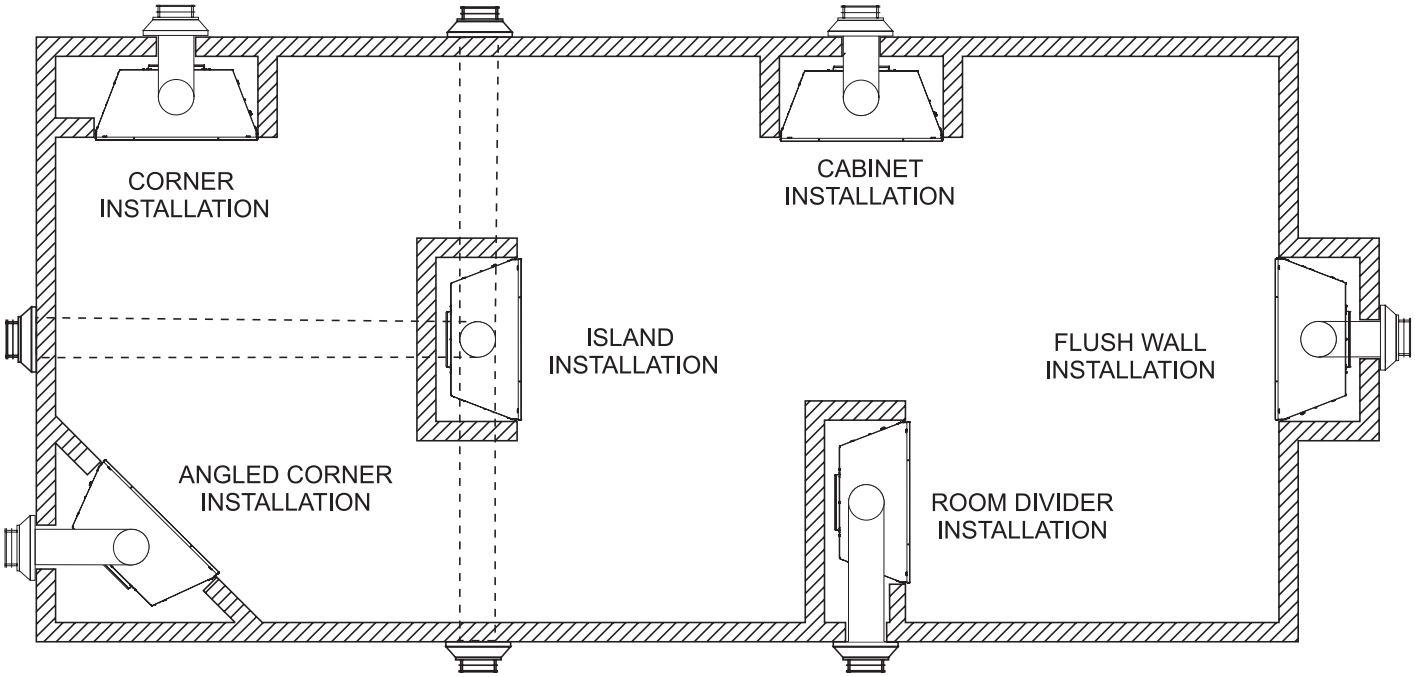

Note: Island and Room Divider installation is possible as long as the horizontal portion of the vent system does not exceed 20 feet with a minimum vertical run of 8 feet. See details in Venting Section.

Note: When installing this appliance against an exterior wall, insulate to applicable insulation codes.

When you install your Direct Vent Fireplace in Room divider or Flat on wall corner positions, a minimum of 6 inches clearance must be maintained from the perpendicular wall and the front edge of the appliance.

Figure 11

ELECTRICAL CONSIDERATIONS

⚠ CAUTION

All wiring should be done by a qualified electrician and shall be in compliance with all local, city and state building codes. Before making the electrical connection, make sure that the main power supply is disconnected. The appliance, when installed, must be electrically grounded in accordance with local codes, or in the absence of local codes, with the National Electrical Code ANSI/NFPA 70 (Latest Edition).

A factory installed junction box is located on the lower right side of the fireplace. Wiring must be fed to the junction box and attached to the receptacle that is provided. Leave approximately 6 inches of wire in the junction box for connection.

Attach black wire to brass colored screw on the receptacle and white wire to the silver colored screw on the receptacle. The ground wire should be attached to the green (ground) screw.

Install the receptacle into the junction box. Attach cover plate.

JUNCTION BOX CONNECTIONS

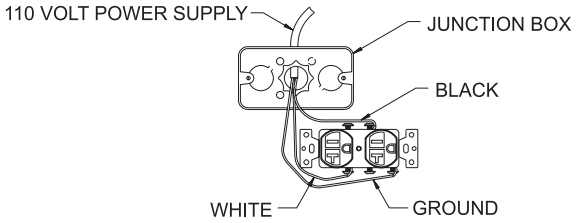

Figure 12

Framing

Fireplace framing can be built before or after the fireplace is set in place. Framing should be positioned to accommodate wall covering and fireplace facing material. The fireplace framing should be constructed of 2 x 4 lumber. The framing headers may rest on the fireplace standoffs. Refer to **Figure 13** for minimum framing dimensions.

ATTENTION: Measure fireplace dimensions and verify framing methods and wall covering details before framing construction begins.

Framing dimension "A" includes a six inch clearance for standoffs on firebox. After installing firebox into framing, the finished wall surface must cover the six inch opening above the firebox.

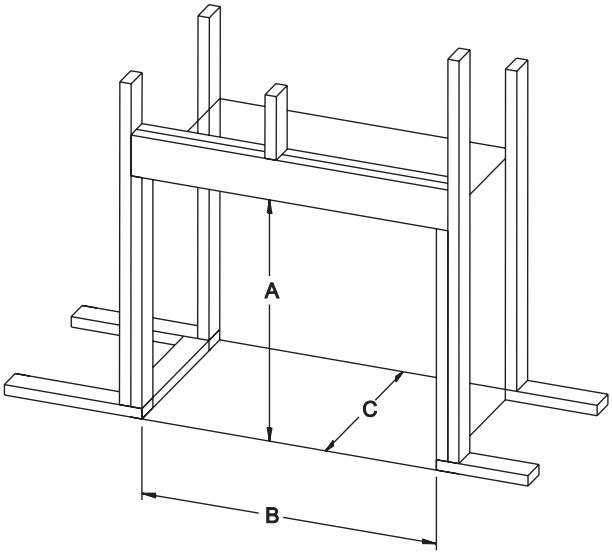

	DIMENSIONS (in inches)	
DIM.	ADVCX36	ADVCX42
A	42-5/16	42-5/16
B	42-3/8	46-3/8
C	21-1/2	21-1/2

Figure 13

Framing and Finishing

1. Choose unit location.
2. Frame in fireplace with a header across the top. It is important to allow for finished face when setting the depth of the frame.
3. Attach fireplace to frame using adjustable frame. Preset depth to suit facing material (adjustable to 1/2, 5/8 or 3/4-inch depths).
4. Locate the nailing flanges on the sides of the firebox (two each side).
6. Measure from face of fireplace to face of drywall strip to determine final depth and adjust nailing flanges as shown in **Figure 14**.

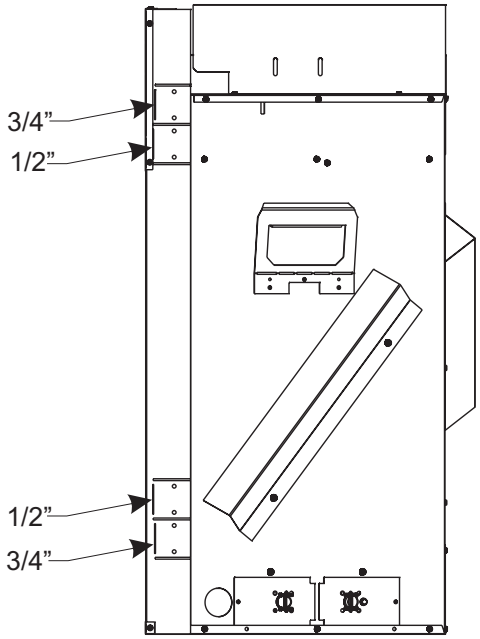

Figure 14

8. Bend the nailing flanges 90 degrees.

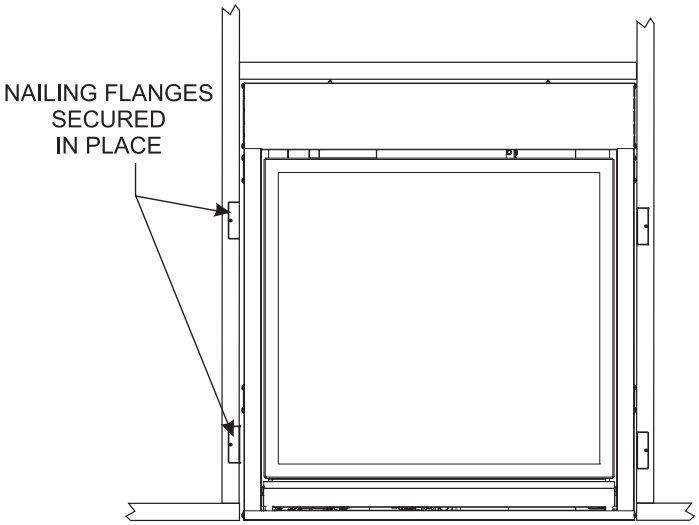

Figure 15

Vent Pipe Clearance

NOTE: Maintain two inches of clearance around vertical vent pipe on first twelve inches. **See Figure 16**.

For horizontal vent, maintain a minimum one-inch clearance to the bottom and sides of the vent, and three-inch clearance to combustibles above the vent pipe. **See Figure 17.**

NOTE: A two-inch clearance around pipe for the first twelve inches above the fireplace is required.

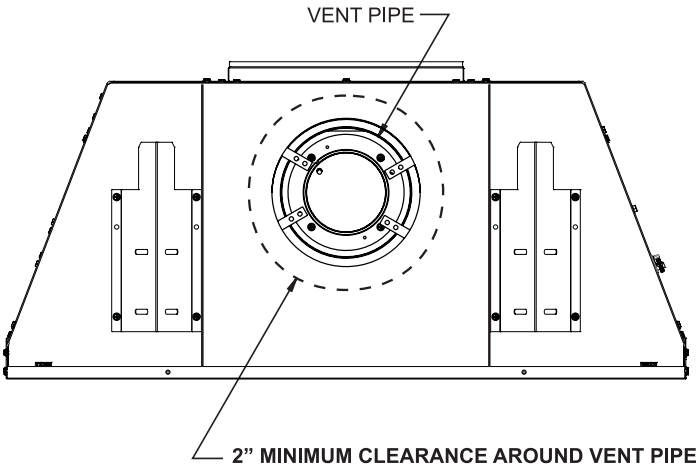

Figure 16

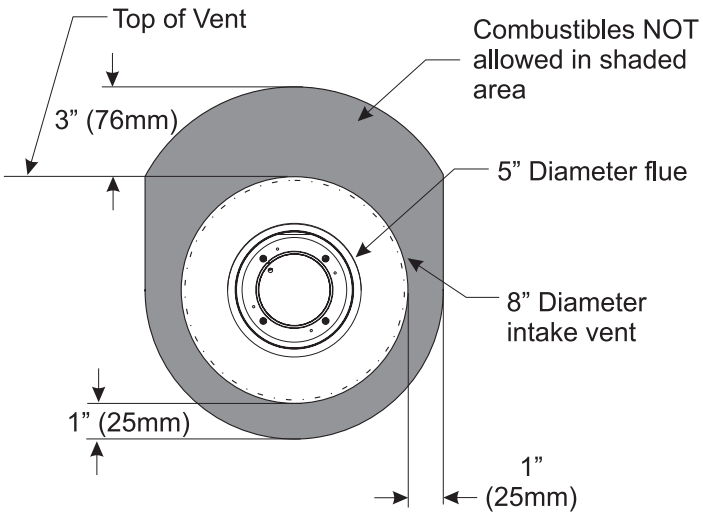

Figure 17 - Horizontal Vent Clearances

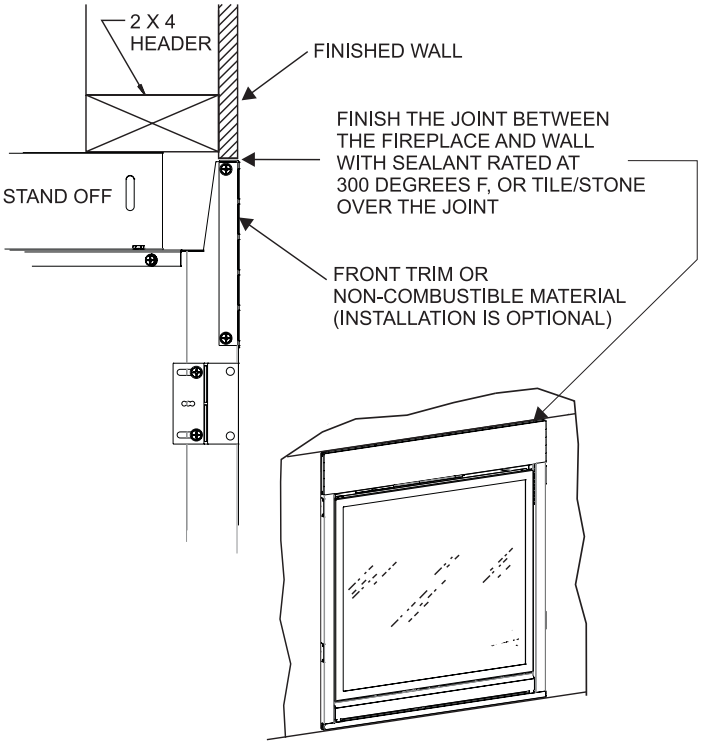

Figure 18 - Flush Wall Installation

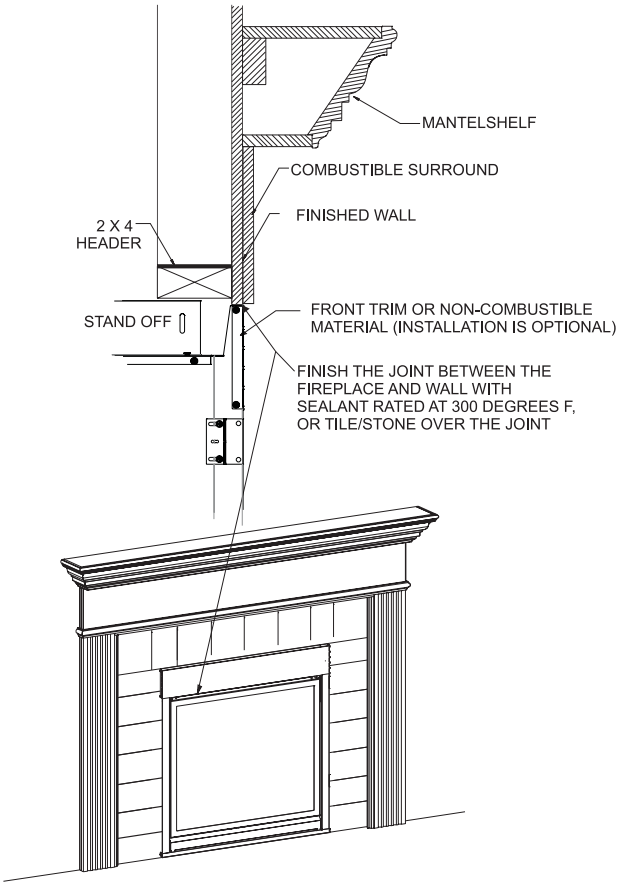

Figure 19 - Combustible Surround Installation

Attention: Cold climate installation recommendation: When installing this unit against a non-insulated exterior wall, the outer walls should be insulated to conform to applicable codes.

Finish the joint between the fireplace and wall with sealant rated at 300 degrees F, or tile/stone over the joint.

Vent Runs

In planning the installation for the fireplace, it is necessary to install certain components before the appliance is completely positioned and installed. These include the direct vent system, gas piping for the appliance and the electrical wiring. (If the fan option is used.) The appliance can be mounted on any of the following surfaces:

1. A flat, hard combustible (burnable) surface.
2. A raised wooden platform.
3. Four corner supports. (Example: Four concrete masonry blocks.) These supports must be positioned so they contact all four perimeter edges on the bottom of the unit.

Securing the Vent Pipe to the Fireplace

1. Hand bend the tabs up on the Outer Wrapper Top Assembly as shown in **Figure 20.**

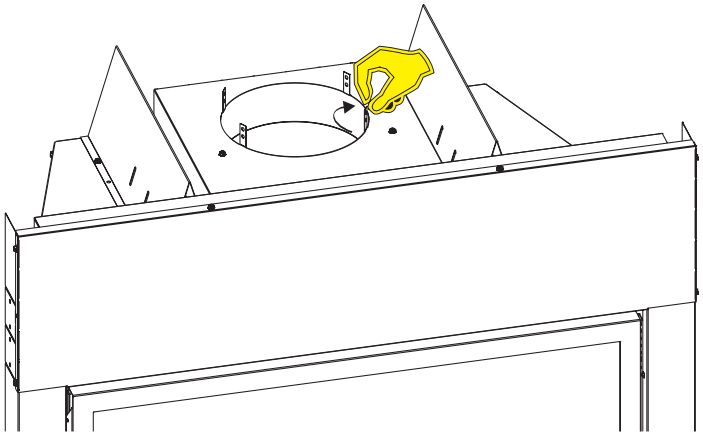

Figure 20

2. Insert the first piece of pipe and secure with 4 screws through the tabs and into the pipe. **See Figures 21 and 22.**

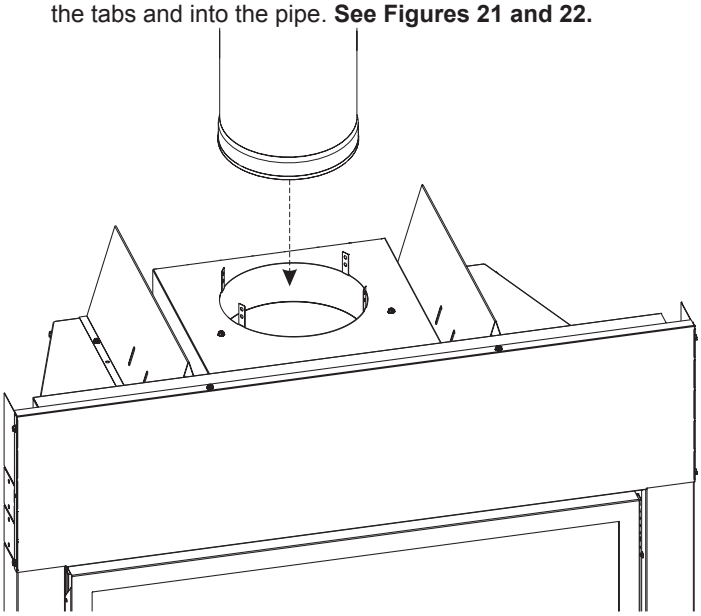

Figure 21

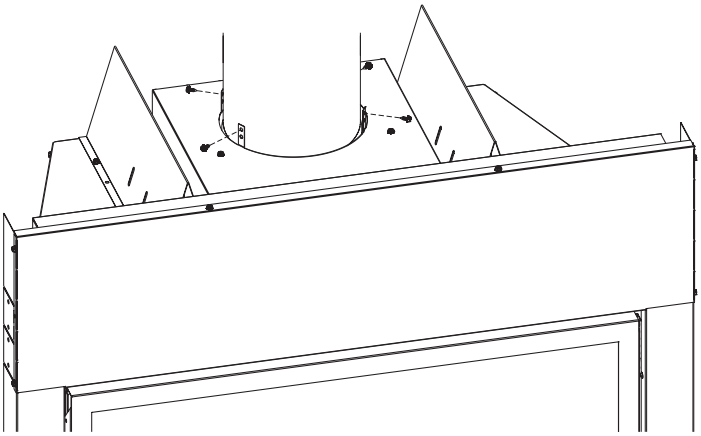

Figure 22

VERTICAL, 90 DEGREE ELBOW WITH HORIZONTAL TERMINATION

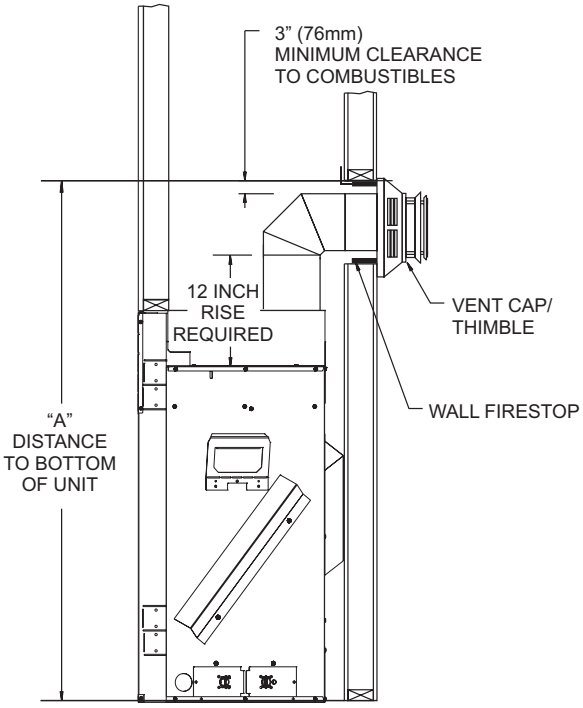

A DIMENSION (in inches)	
ADVCX36	57-1/2
ADVCX42	57-1/2

Figure 23

VERTICAL, 90 DEGREE ELBOW TO HORIZONTAL OUT THE WALL (12 inch minimum rise before elbow)

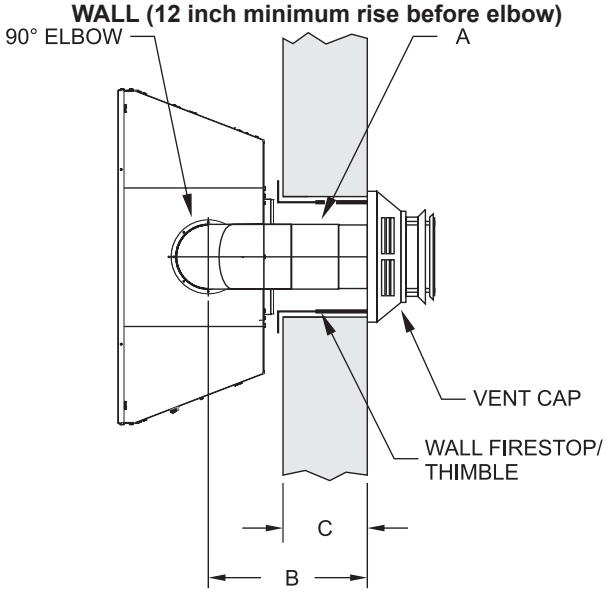

Dimensions (in inches)		
A	B	C
9	14 to 15-1/2	4-3/4 to 6-1/4
12	17 to 18-1/2	4-3/4 to 9-1/4
18	20 to 21-1/2	10-3/4 to 12-1/4

Figure 24

CORNER INSTALLATION - VERTICAL, 90 DEGREE ELBOW TO HORIZONTAL OUT THE WALL (12 inch minimum rise before elbow)

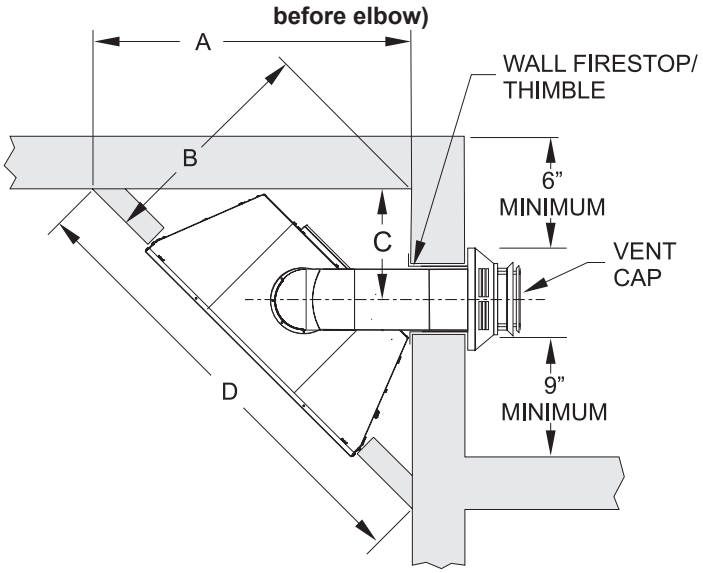

DIMENSIONS (in inches)		
DIM.	ADVCX36	ADVCX42
A	47	49-7/8
B	33-1/4	35-1/4
C	13-3/4	15-1/8
D	66-3/8	70-1/2

Figure 25

After installing the vent system, install flue heat shield.

1. Hand bend tabs on flue heat shield out 90°.
2. Attach to insulation box as shown in Figure 26.

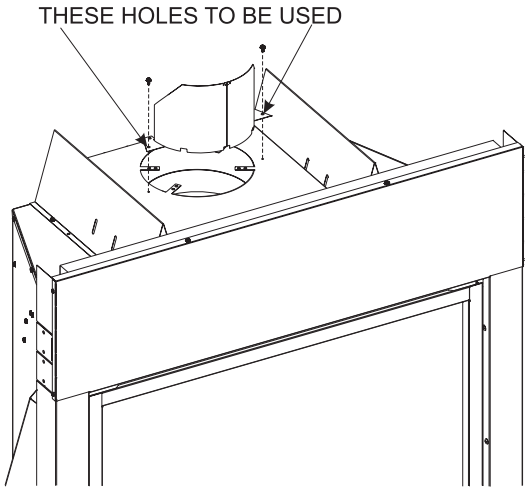

Figure 26 (vent pipe removed for clarity)

VENT SYSTEM IDENTIFICATION

Begin the vent system installation by selecting the type of venting to be installed and the path that it will take. Verify that clearances are met throughout the path of the venting system.

Determine how the vent system will be terminated out the side of the house or through the roof. Verify clearances for the termination.

When selecting a vent system for use with the fireplace, refer to the “Special Vent Systems” section in this manual to determine what systems are acceptable. Check all clearances and venting components. Identify if any problems existing in the vent system.

Use **Figure 33** on Page 22 for venting to eliminate issues after installation. Check pipe diameter on vent system and fireplace to verify the size is the same.

***NOTICE*:** All outer connection joints must be sealed with aluminum tape, screws or silicone sealant rated above 300°F/149°C. The inner flue joints do not require any sealant.

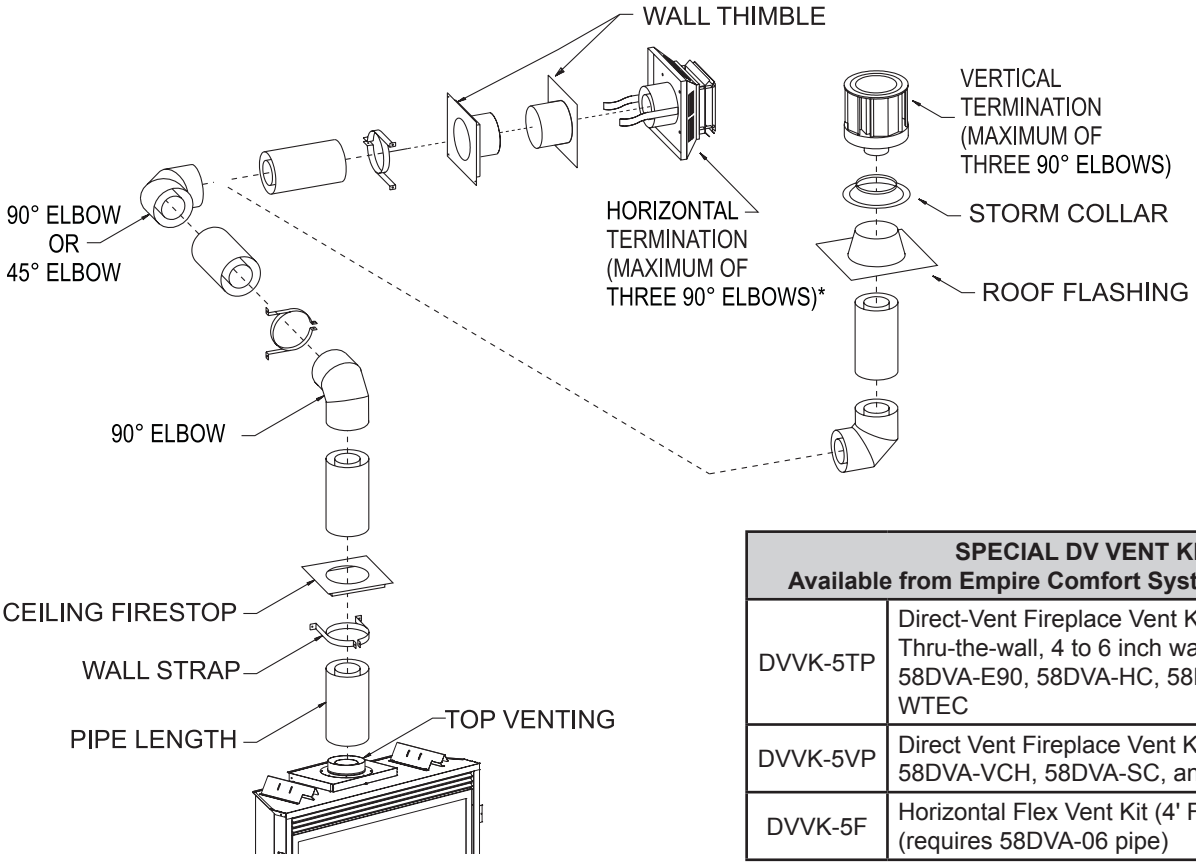

Figure 27

SPECIAL DV VENT KITS Available from Empire Comfort Systems, Inc. dealers.	
DVVK-5TP	Direct-Vent Fireplace Vent Kit for Top Vent, Thru-the-wall, 4 to 6 inch wall thickness, Includes 58DVA-E90, 58DVA-HC, 58DVA-06, and 58DVA-WTEC
DVVK-5VP	Direct Vent Fireplace Vent Kit - Vertical, Includes 58DVA-VCH, 58DVA-SC, and 58DVA-F6
DVVK-5F	Horizontal Flex Vent Kit (4' Flex) (1.22m) (requires 58DVA-06 pipe)

For venting a fireplace through the top, see Page 22.

VENT SYSTEMS

Use one of the following 5 x 8 vent systems:
Simpson Duravent® GS
Simpson Duravent® DVA-H2
American Metal Products (round cap only)
Selkirk Direct-Temp®
Security Secure Vent®
Excel DV Venting
Empire Horizontal Flex Vent Kit DVVK-5F
Metal Fab Sure Seal® (Note: Adaptor pipe starter required)

VENTING FIREPLACE

⚠ CAUTION

Use flue restrictor for vertically terminated units only. Do not use for horizontally terminated units. Incorrect usage may cause sooting.

Figures 28 and 29 shows the location and recommended openings for the flue restrictor. Adjustments may be made for each particular installation.

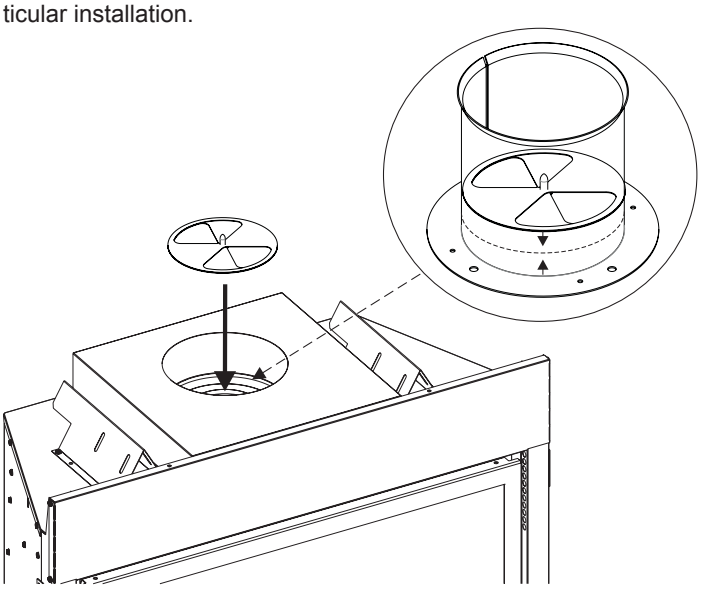

Figure 28

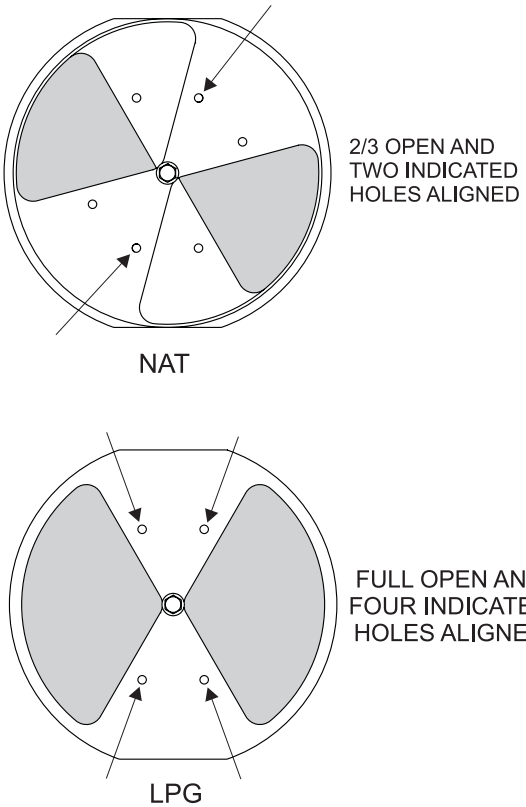

Figure 29

The minimum hole location dimensions for through the wall horizontal installations with a 90 degree elbow and 12 inch rise off the top of the fireplace.

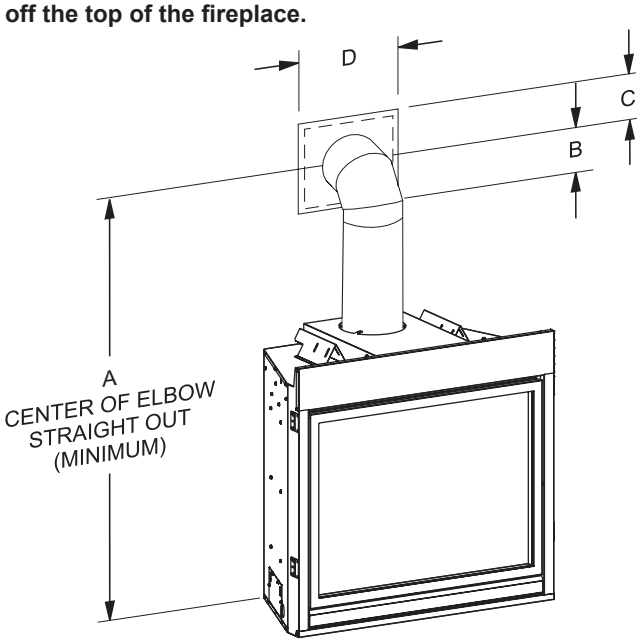

FIREPLACE SERIES	HARD ELBOW DIMENSIONS (in inches)			
	A	B	C	D
ADVCX36	51-1/2	5-5/16	7-5/16	10-5/8
ADVCX42	51-1/2	5-5/16	7-5/16	10-5/8

Figure 30

Positioning the Fireplace

Determine the exact position of the appliance so the direct-vent termination will be centered (if possible) between two studs. This will avoid any extra framing. All vent kit pipes should be assembled on the unit after the unit is moved into the final position.

Cutting the Hole

After the fireplace has been positioned in its permanent location, the hole through the exterior wall of the house can be cut. This hole must be 12-5/8" (320mm) high x 10-5/8" (270mm) wide with its center line determined by the amount of vertical rise and horizontal run of the termination. **See Figure 31.** When locating the hole it must be noted that the bottom of the cap must be 12 inches (305mm) above the ground level, and top of the cap must be no less than 18 inches (457mm) below a combustible projection, and no closer than 9 inches (229mm) to any wall running parallel to vent termination.

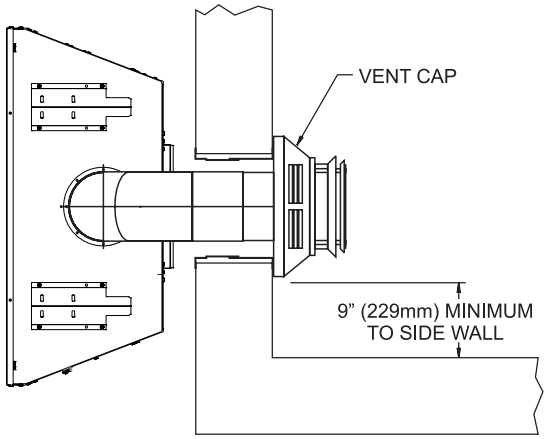

Figure 31

Below Grade Installation

When it is not possible to meet the required vent termination clearances of 12 inches (305 mm) above grade level, a snorkel kit is recommended. It allows installation depth down to 7 inches (178 mm) below grade level. The 7 inches (178 mm) is measured from the center of the horizontal vent pipe as it penetrates through the wall.

⚠ CAUTION

Ensure the sidewall venting clearances are observed. If venting system is installed below ground, we recommend a window well with adequate and proper drainage to be installed around the termination area.

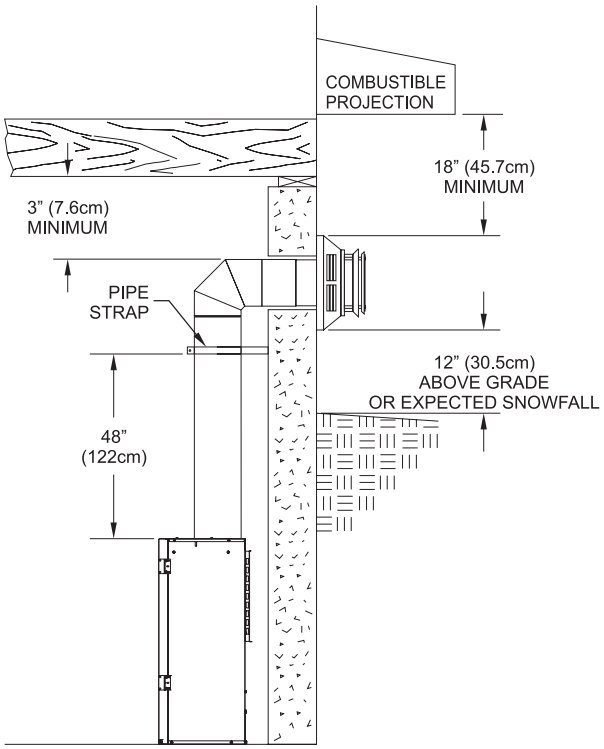

TYPICAL BASEMENT INSTALLATION

Figure 32

VENTING GRAPH (Dimensions in Feet)

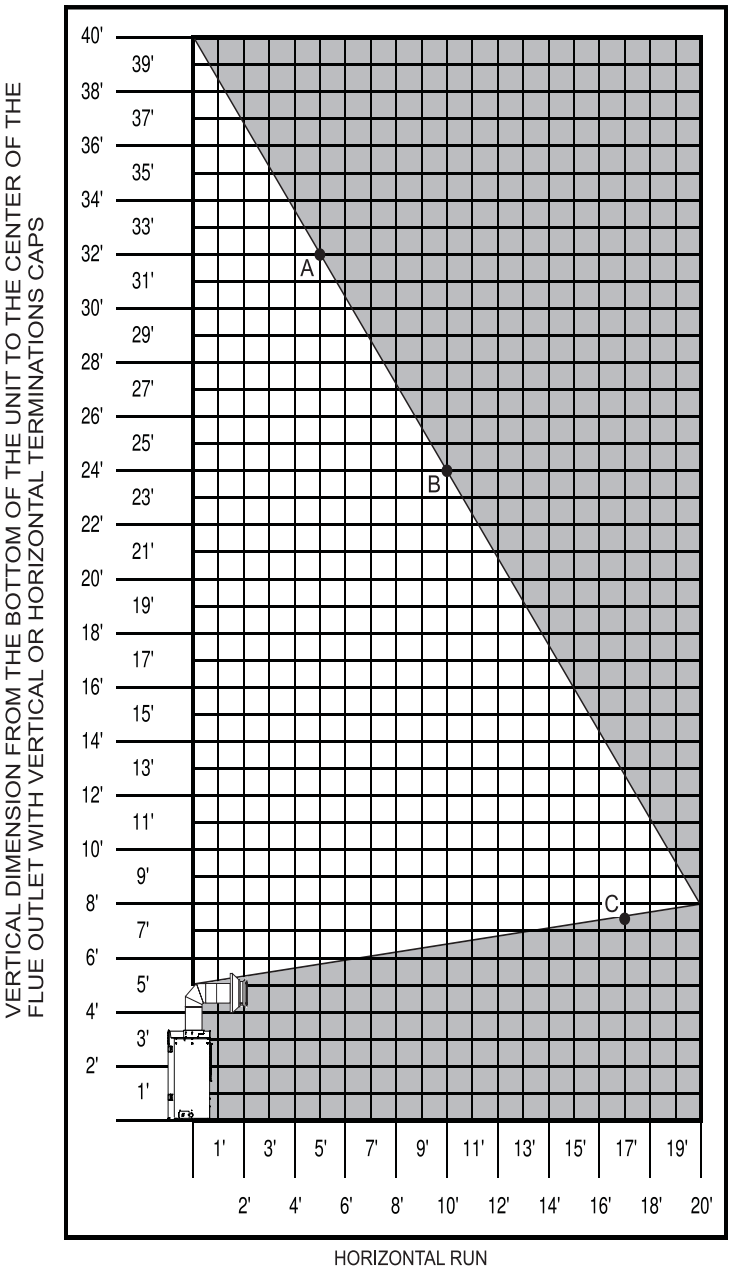

☐ Acceptable vertical and horizontal vent run.
(40' maximum vertical and 20' maximum horizontal)

■ Unacceptable vertical and horizontal vent run.

See Figure 34 on Page 23 for A, B and C examples.

Figure 33

To Use the Vent Graph

1. Determine the height of the center of the horizontal vent pipe. Using this dimension on the Sidewall Vent Graph, locate the point it intersects with the slanted graph line.
2. From the point of this intersection, draw a vertical line to the bottom of the graph.
3. Select the indicated dimension, and position the unit in accordance with same.

EXAMPLE A:
If the vertical dimension from the floor of the unit is 32 feet, the horizontal run to the outer wall flange must not exceed 5 feet.

EXAMPLE B:
If the vertical dimension from the floor of the unit is 24 feet, the horizontal run to the outer wall flange must not exceed 10 feet.

EXAMPLE C:
If the horizontal run to the outer wall flange is 17 feet, the vertical dimension from the floor of the unit to the center of the termination must not be less than 7 feet 6 inches.

SPECIAL NOTE: For each 45° elbow installed in the horizontal run, the length of the horizontal run MUST be reduced by 18 inches. Reduce 3 feet for every 90° elbow. This does not apply if the 45° elbows are installed on the vertical part of the vent system.

Example: According to the chart the maximum horizontal vent length is 20 feet and if two 45° elbows are required in the horizontal vent it must be reduced to 17 feet.

The maximum number of 45° elbows permitted per side wall installation is two. These elbows can be installed in either the vertical or horizontal run.

The maximum number of 90° elbows in a vent run is three.

Note: On vertical venting the first elbow does not get counted.

Note: A horizontal vent with the minimum required vertical rise (using a 12-inch section of vent before the elbow) will use a maximum of a 2-foot section of horizontal vent before the termination.

TOP VENT - HORIZONTAL TERMINATION

One 90° Elbow

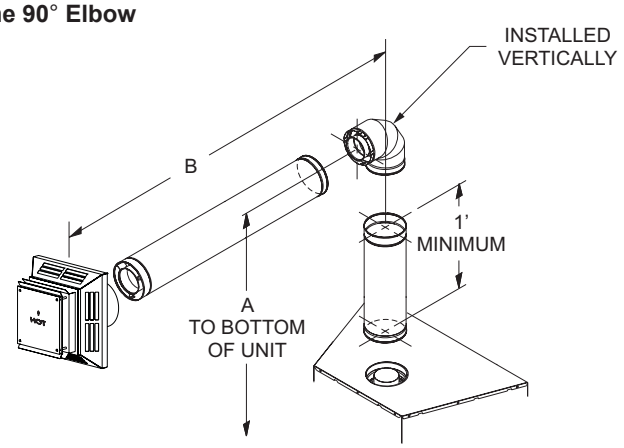

	EXAMPLE VENT RUNS		
	INITIAL PIPE LENGTH	A (Vertical)	B (Horizontal)
	12”	4’-3.5”	2’ MAXIMUM
	24”	5’-3.5”	9’ MAXIMUM
	36”	6’-3.5”	14’ MAXIMUM
EXAMPLE C	4’	7’-3.5”	17’ MAXIMUM
EXAMPLE B	20’-6”	23’-9.5”	10’ MAXIMUM
EXAMPLE A	28’-6”	31’-9.5”	5’ MAXIMUM

Figure 34

Note: Pipe straps must be used every 2 feet to secure venting.

Two 45° Elbows

Installation requirements to replace the first 90° elbow with two 45° elbows:

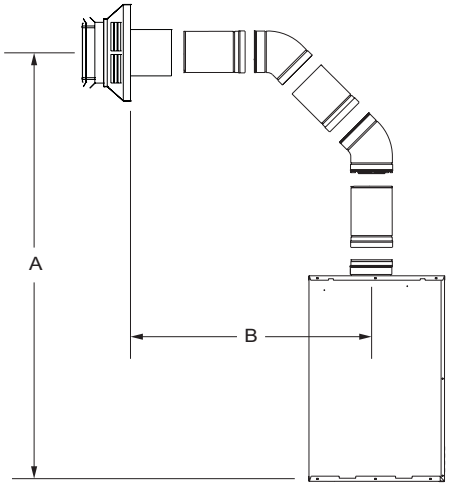

EXAMPLE VENT RUNS		
INITIAL PIPE LENGTH	A (Vertical)	B (Horizontal)
24”	6’	9’ MAXIMUM
36”	7’	14’ MAXIMUM
4’	8’	20’ MAXIMUM
12’	16’	15’ MAXIMUM
24’	28’	7’-6” MAXIMUM

Figure 35

Two 90° Elbows

Note: Subtract 3 feet from the total horizontal measurement for each 90° elbow installed horizontally. Subtract 1-1/2 feet from the total horizontal measurement for each 45° elbow installed horizontally.

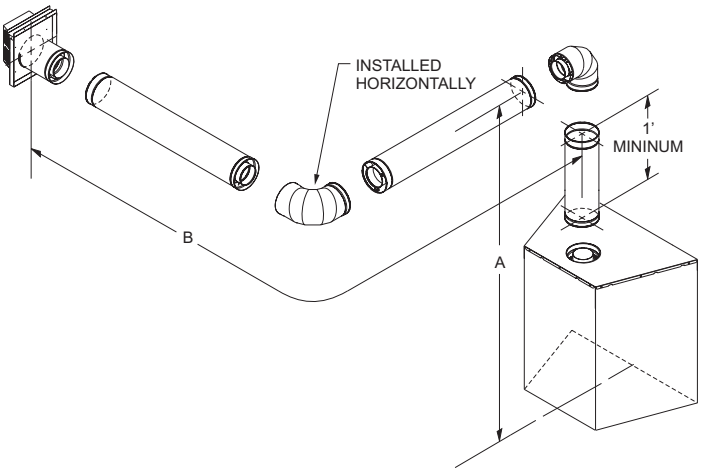

EXAMPLE VENT RUNS		
INITIAL PIPE LENGTH	A (Vertical)	B (Horizontal)
3’	6’-3.5”	11’ MAXIMUM
4’	7’-3.5”	17’ MAXIMUM
4’-6”	7’-9.5”	17’-16” MAXIMUM
12’-6”	15’-9.5”	11’-6” MAXIMUM
24’-6”	27’-9.5”	4’-6” MAXIMUM

Figure 36

Three 90° Elbows

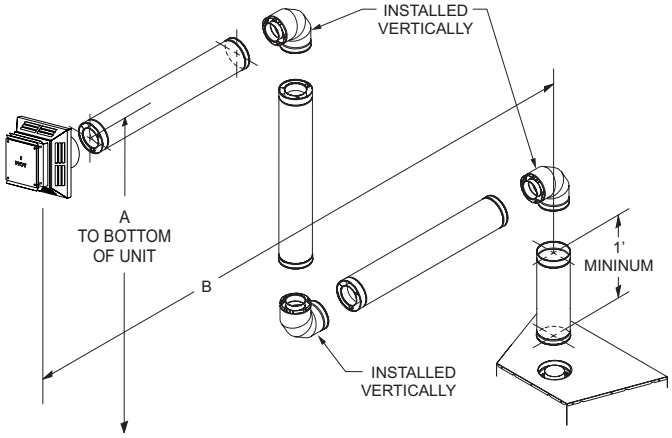

EXAMPLE VENT RUNS		
INITIAL PIPE LENGTH	A (Vertical)	B (Horizontal)
1’ MINIMUM	6’-6”	7’ MAXIMUM
1’ MINIMUM	7’-6”	14’ MAXIMUM
1’ MINIMUM	8’	17’ MAXIMUM
1’ MINIMUM	16’	12’ MAXIMUM
1’ MINIMUM	32’	2’ MAXIMUM

Figure 37

TOP VENT - VERTICAL TERMINATION

No Elbows

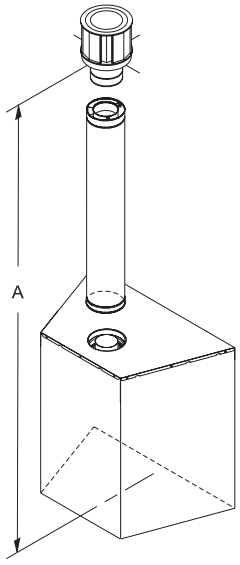

Index Letter	Dimensions	
	Maximum	Minimum
A	40 ft	10 ft

Figure 38

Two 90° Elbows

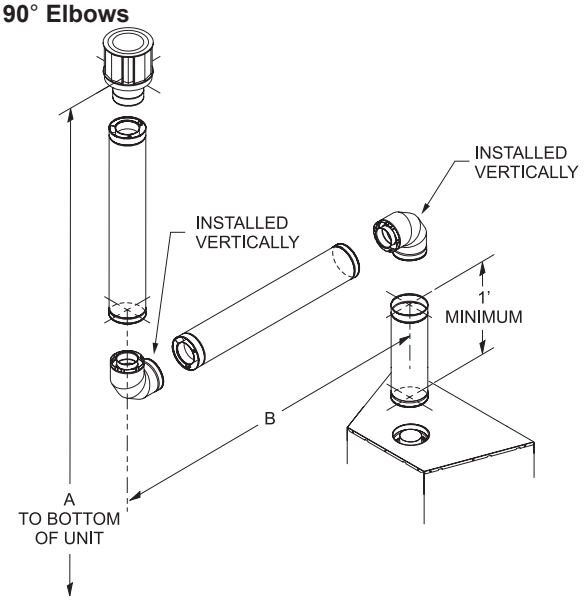

Dimensions (in Feet)		
	A	B*
MIN. 4	8	20
6	10	18-1/2
8	12	17
10	14	16
MAX. 12	16	15

*Maximum horizontal run is 100% of vertical, but cannot exceed 20 feet.

Figure 39

Three 90° Elbows

Note: Subtract 3ft (914 mm) from the total horizontal measurement for each 90° elbow installed horizontally. Subtract 1-1/2 ft (457 mm) from the total horizontal measurement for each 45° elbow installed horizontally.

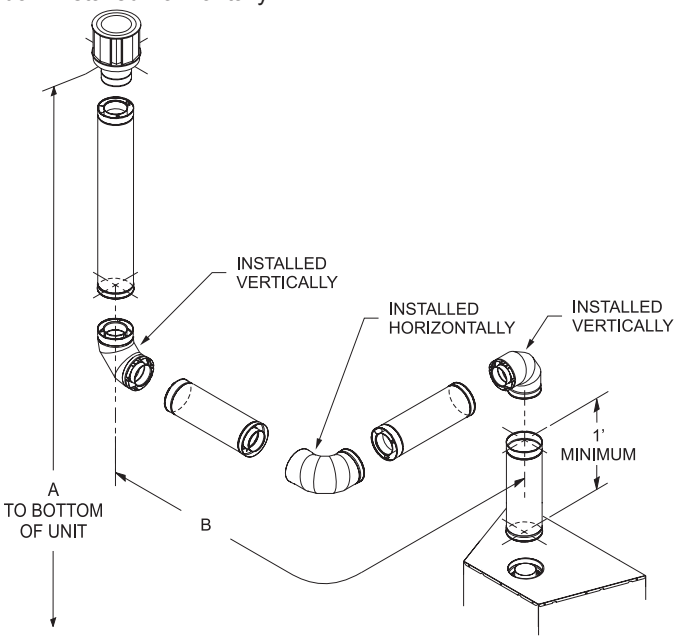

Dimensions (in Feet)		
	A	B*
MIN. 4	8	17
6	10	15-1/2
8	12	14
10	14	13
MAX. 12	16	12

*Maximum horizontal run is 100% of vertical, but cannot exceed 17 feet.

Figure 40

After installing the vent system, install flue heat shield.

1. Hand bend tabs on flue heat shield out 90°.
2. Attach to insulation box as shown in Figure 41.

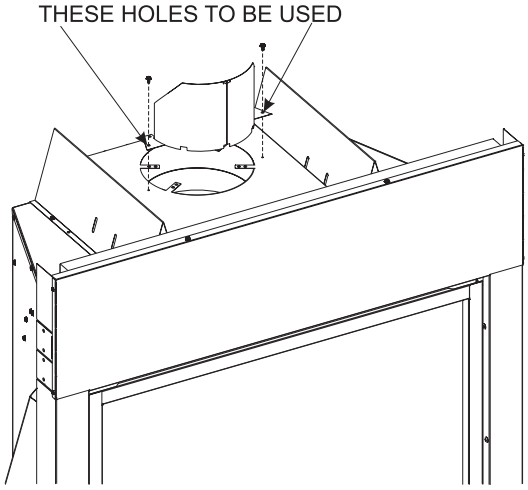

Figure 41 (vent pipe removed for clarity)

VERTICAL TERMINATION

Locate and mark the center point of the vent pipe using a nail on the underside of the roof. Drive the nail through the center point. Mark the outline of the roof hole around this center point.

NOTE: Size of the roof hole dimensions depend on the pitch of the roof. There must be a 1 inch (25 mm) clearance to the vertical pipe sections. This clearance is to all combustible material.

Cover the opening of the vent pipe and cut and frame the roof hole. Use framing lumber the same size as the roof rafters and install the frame securely. Flashing anchored to frame must withstand high winds. The storm collar is placed over this joint to make a water-tight seal. Non-hardening sealant should be used to completely seal this flashing installation.

Determining Minimum Vent Height Above the Roof.

⚠ WARNING

Major U.S. building codes specify minimum chimney and/or vent height above the roof top. These minimum heights are necessary in the interest of safety. These specifications are summarized in Figure 42.

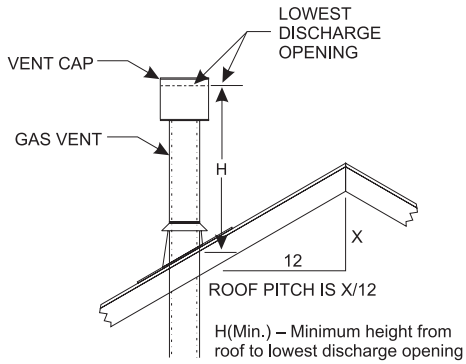

ROOF PITCH	H (Min.)
Flat to 6/12	12" (305 mm)
6/12 to 7/12	15" (381 mm)
Over 7/12 to 8/12	18" (457 mm)
Over 8/12 to 16/12	24" (610 mm)
Over 16/12 to 21/12	36" (914 mm)

Figure 42

Note that for steep roof pitches, the vent height must be increased. In high wind conditions, nearby trees, adjoining roof lines, steep pitched roofs, and other similar factors can result in poor draft, or down-drafting. In these cases, increasing the vent height may solve this problem.

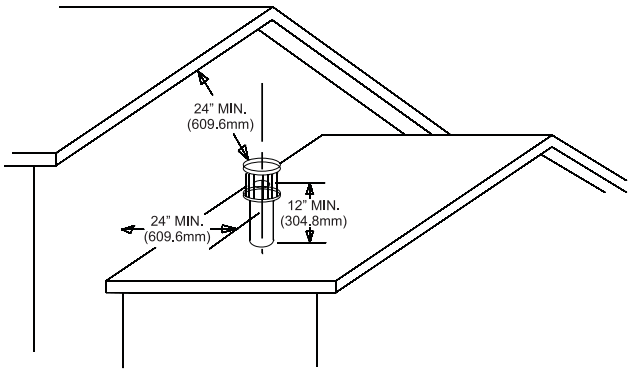

Figure 43

General Maintenance

Inspect venting system semi-annually as follows:

1. Check for corrosion areas of the venting system exposed to the elements. These will appear as rust spots or streaks and, in extreme cases, holes. Replace damaged components should immediately.
2. Remove the cap and shine a flashlight down the vent. Remove any bird nests or other foreign material.
3. Check for evidence of excessive condensate, such as water droplets forming in the inner liner and subsequently dripping out at joints. Condensate can cause corrosion of caps, pipe and fittings. It may be caused by having excessive lateral runs, too many elbows and exterior portions of the system being exposed to cold weather.
4. Inspect joints to verify that no pipe sections or fittings have been disturbed and, consequently, loosened. Also, check mechanical supports, such as wall straps or plumbers' tape for rigidity.

Venting termination shall not be recessed into a wall or siding.

A removable panel or other means must be provided in the enclosure for visual inspection of the flue connection.

NOTE: This also pertains to vertical vent systems installed on the outside of the building.

Slide the vertical vent cap over the ends of the vent pipe and secure. **See Figure 44.**

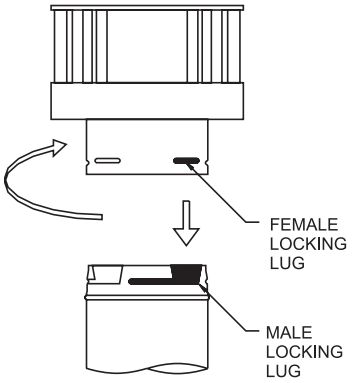

Figure 44

Installing the Vent System in a Chase

A chase is a vertical box-like structure built to enclose the gas appliance and/or its vent system. Vertical vent runs on the outside of a building may be, but are not required to be installed inside a chase.

⚠ CAUTION

Treatment of firestop spacers and construction of the chase may vary with the type of building. These instructions are not substitutes for the requirements of local building codes. Check local building codes to determine the requirements for these steps.

NOTE: Build the chase large enough to the minimum clearance of combustible materials (including insulation) to the vent system. When installing the vent system in a chase, to insulate the chase as you would the outside walls of your home. This is especially important in cold climates. Upon completion of chase framing, install the vent system by following the instructions in this manual.

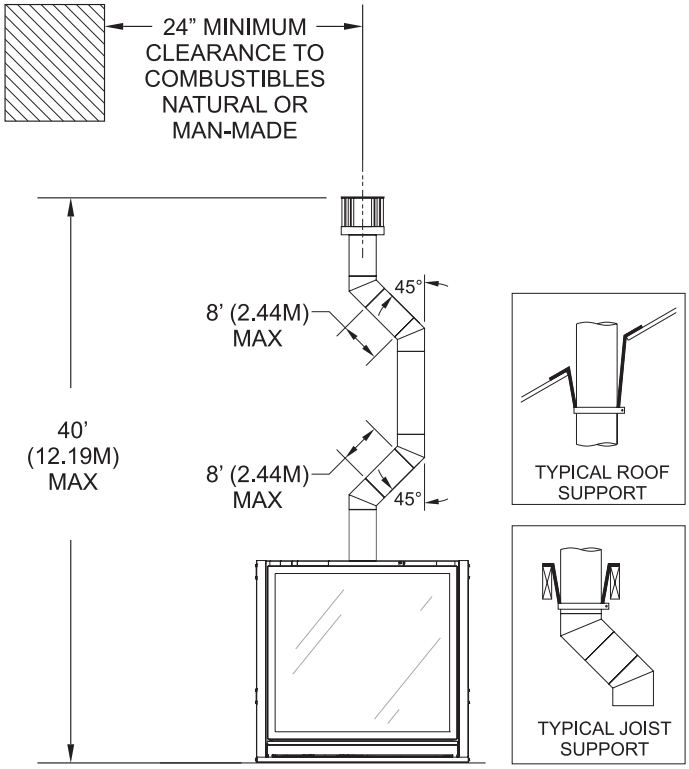

Figure 45

Vertical Through the Roof Applications

Your Gas Fireplace has been approved for:

a) Vertical installations up to 40 feet in height.
b) Two sets of 45 degree elbow offsets within these vertical installations. From 0 to a maximum of 8 ft. a vent pipe can be used between elbows.
c) Wall straps must be used to support offset pipe every 4’.

This application will require that you first determine the roof pitch and use the appropriate venting components.

OFFSET CHART

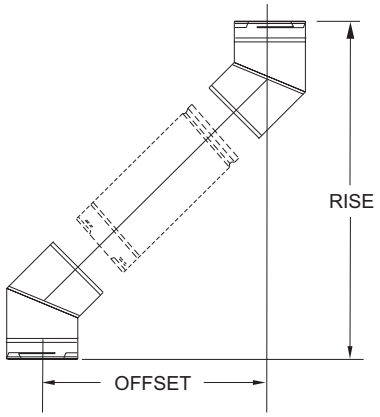

SIZE		5” X 8”	
ELBOW DEGREES	CHIMNEY SECTION	OFFSET INCHES	RISE INCHES
45°	0”	5-5/8”	15-3/8”
45°	6”	8-7/8”	18-3/8”
45°	9”	10-7/8”	20-5/8”
45°	12”	13”	22-5/8”
45°	24”	21-3/8”	31-1/8”
45°	36”	29-7/8”	39-3/8”
45°	36”	28-7/8”	39-3/8”
45°	48”	38-1/4”	47-7/8”

Figure 46

Installing Support Brackets
Install a horizontal pipe support used for each 3 feet of horizontal run to framing members. Allow 3 inch clearance to combustibles above 8 inch diameter pipe and elbows and 1 inch clearance on both sides and bottom.
Support vertical runs of this vent systems every 4 feet using wall brackets attached to the vent pipe and secured with nails or screws to structural framing.

NOTE: Maintain minimum 2 inch clearance between stud wall and outside diameter of pipe within the first 12 inches above flue outlet.

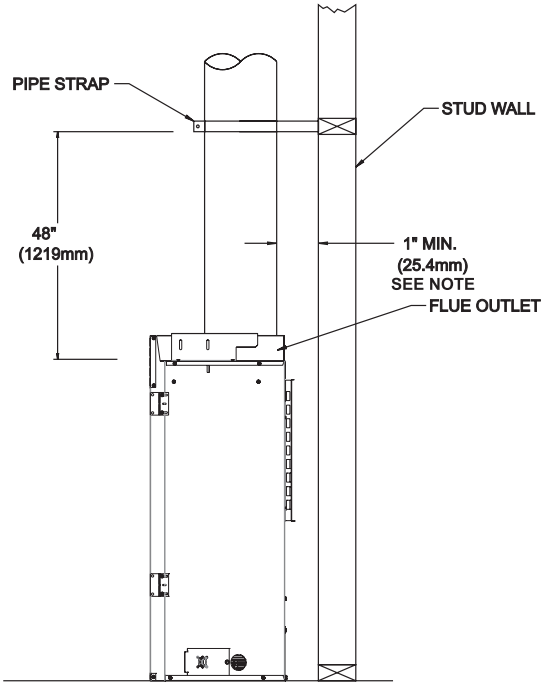

Figure 47

Installing Firestops
Firestops are required for safety whenever the vent system passes through an interior wall, an exterior wall, or a ceiling. These firestops act as a firebreak heat shield and as a means to insure that minimum clearances are maintained to the vent system.

Horizontal Firestops
Horizontal runs in the vent system which pass through either interior or exterior walls, require the use of wall firestops on both sides of the wall through which the vent passes.
Position the firestops on both sides of the framed hole, previously cut. Refer to **Figures 49 - 51** on Page 28 for sizing information. Secure firestop with nails or screws. The heat shields of the firestops MUST BE placed towards the top of the hole. Continue the vent run through the firestops.

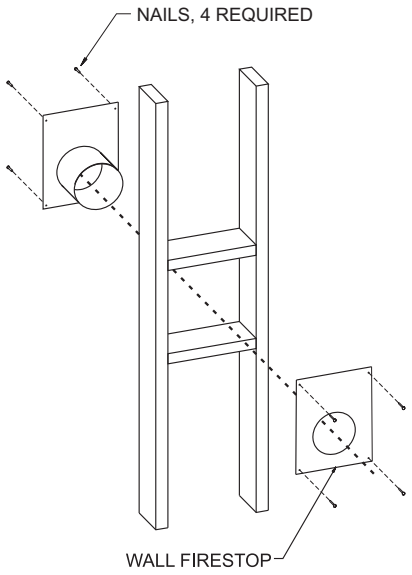

Figure 48

NOTE: SD58DVAWTEC Wall thimble is necessary to maintain the required three inches of clearance to combustibles above the vent. Framed hole dimensions shown above are for this wall thimble.

Vertical Firestops

Vertical runs of this system which pass through ceilings require the use of ONE ceiling firestop at the hole in each ceiling through which the vent passes.

Position a plumb bob directly over the center of the vertical vent component and mark the ceiling to establish the center point of the vent. Drill a hole or drive a nail through this center point and check the floor above for any obstructions such as wiring or plumbing runs. Reposition the appliance and vent system, if necessary, to accommodate ceiling joists and/or obstructions.

Cut a 10-5/8 inch x 10-5/8 inch hole through the ceiling, using the center point previously marked. Frame the hole with framing lumber the same size as the ceiling joists. **See Figure 49.** If the area above the ceiling is NOT an attic, position and secure the ceiling firestop on the ceiling side of the previously cut and framed hole. **See Figure 50.** If the area above the ceiling is an attic, position and secure the firestop on top of the previously framed hole. **See Figure 51.**

NOTE: Remove insulation from the framed area in the attic before installing the firestop and/or vent pipes.

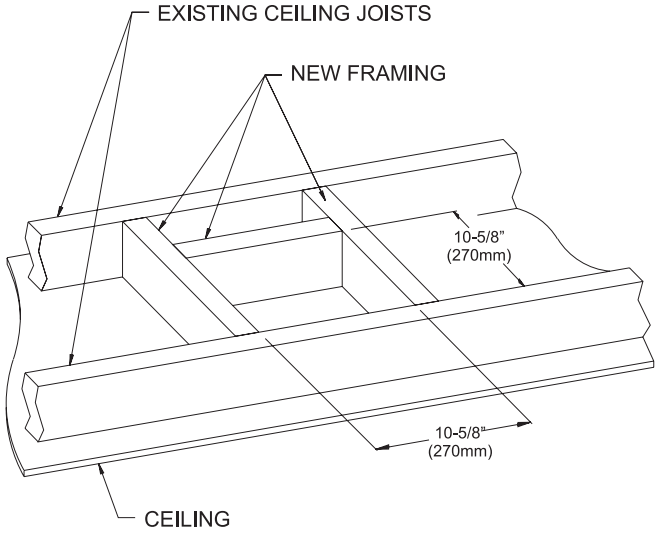

Figure 49

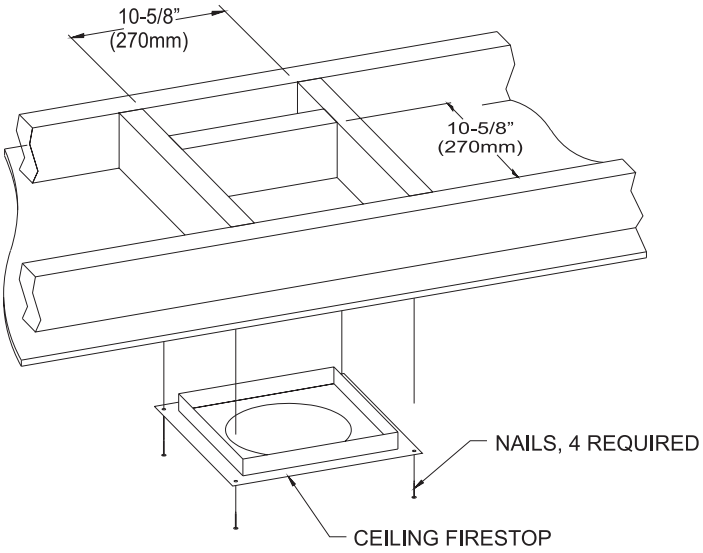

Figure 50

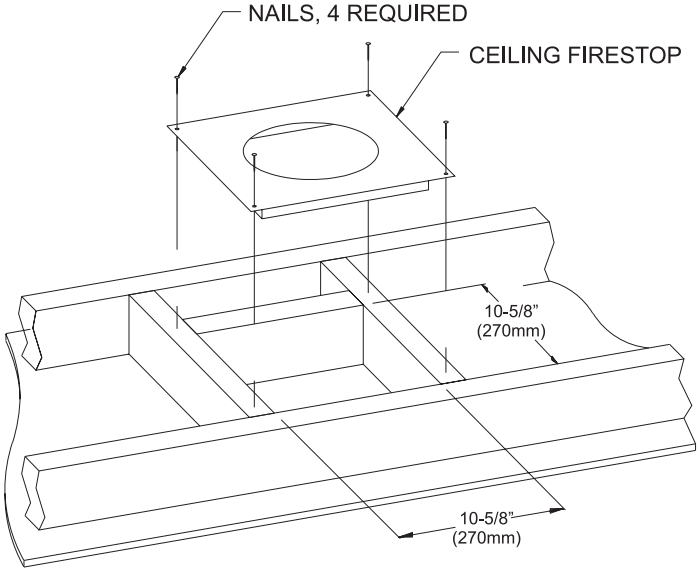

Figure 51

Finishing

Finish the walls with the material of your choice. **Figure 2** on Page 9 shows the minimum vertical and corresponding maximum horizontal dimensions of mantels or other combustible projections above the top front edge of the fireplace.

Only non-combustible materials may be used to cover the black fireplace front.

⚠ WARNING

When finishing the fireplace never obstruct or modify the air inlet/outlet louvers in any manner. Provide adequate clearances around air openings into the combustion chamber.

⚠ CAUTION

If the joints between the finished wall and the fireplace surround (top and sides) are sealed, a 300 Degree F minimum sealant material must be used. These joints are not required to be sealed. Only non-combustible material (using 300 Degree F minimum adhesive if needed), can be applied as facing to the fireplace surround.

DVVK-5F FLEX VENT INSTRUCTIONS

The **DVVK-5F FLEX VENT KIT** includes the following components:

- (1) Horizontal Termination Cap
- (1) 4-foot section of Flex vent with spacers (5-inch flue/ 8-inch outer pipe) with flue adapter collar
- (1) Wall Firestop/Thimble Assembly
- Hardware pack that includes band clamps and screws

Maintain at least ½-inch rise for every 12 inches of vent run.

⚠ CAUTION

- **Because of sharp edges, always use gloves when handling the flex vent components.**
- **Always follow the general venting requirements for vent terminal location, vent lengths, and clearance to combustible materials.**
- **Always stretch and secure venting with wire or metal strapping to ensure that the horizontal runs do not sag.**
- **Vent connections should overlap a minimum of 1 inch for proper sealing.**

INSTALLATION

1. Unpack vent components and check that all items are included.
2. Check to see that the vent spacer springs are located around the flue vent at 8 inch intervals along its length. **See Figures 52 & 53.** If not, stretch the spacer springs to about 15 inches long and wrap them around the flue, then interlock the ends of each spring. Maintain equal distance between spring spacers.

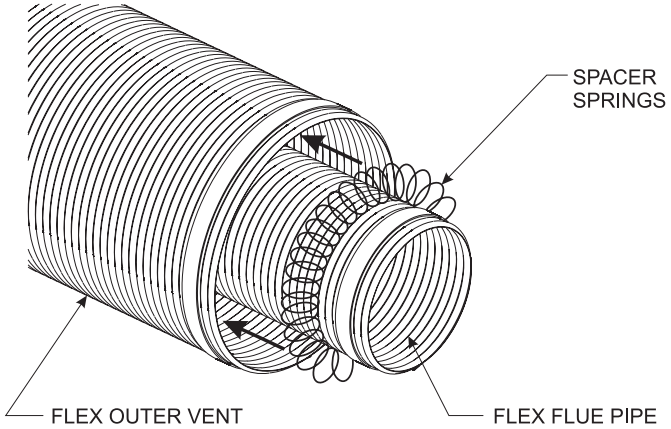

Figure 52

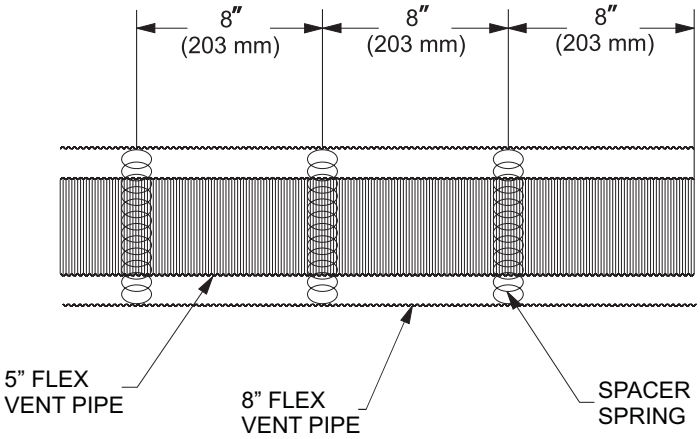

Figure 53

3. Attach a 6-inch piece of hard pipe to raise the connection point above the unit.
4. Use existing 8-inch diameter inlet collar to attach outer vent pipe.
5. Install the Wall Firestop/Thimble assembly as required through the wall. Refer to the venting charts in the fireplace manual to determine the proper height and size of the vent opening. The minimum opening should be 10-inches wide by 12-inches high. The minimum combustible clearance from the horizontal vent is 1 inch from sides and bottom, and 3 inches above the vent pipe.
6. In most cases, after determining the length of the vent that is needed, it may be easier to install the flue and outer vent pipes to the Termination Cap first, then from the outside, feed the venting through the wall to the fireplace.
7. If the venting is to long, trim off any excess vent before attaching the vent end connectors.
8. Attach the Termination Cap to the outside of the house.

⚠ CAUTION

Do not use force when installing the Horizontal Vent Termination into the flex venting. Always stretch venting out first, then cut off excess vent material prior to sliding the vent termination into the flue and inlet venting. Forcing the termination cap into the flex venting will deform the flue venting, which will restrict the exhaust gases, and cause improper operation of the fireplace.

9. Prior to making the vent connections, apply high temperature sealant (1000°F min.) to the vent connections before securing with the band clamps provided. Note: the flue pipe end without the adapter is to be installed to the Termination Cap.
10. Apply sealant to the outside of the flue pipe adapter and connect to the flex flue pipe. Then insert the adapter into the fireplace flue. Secure flue adapter to the fireplace flue with a minimum of two screws provided. **See Figure 54.**
11. Attach the Outer Vent pipe to the 8-inch diameter collar on the fireplace with a large band clamp provided. Sealant may also be used on the outer vent connections.
12. Check all vent connections for tightness. Make sure horizontal venting has the proper rise and combustible clearances required. Refer to venting charts in fireplace instruction manual.

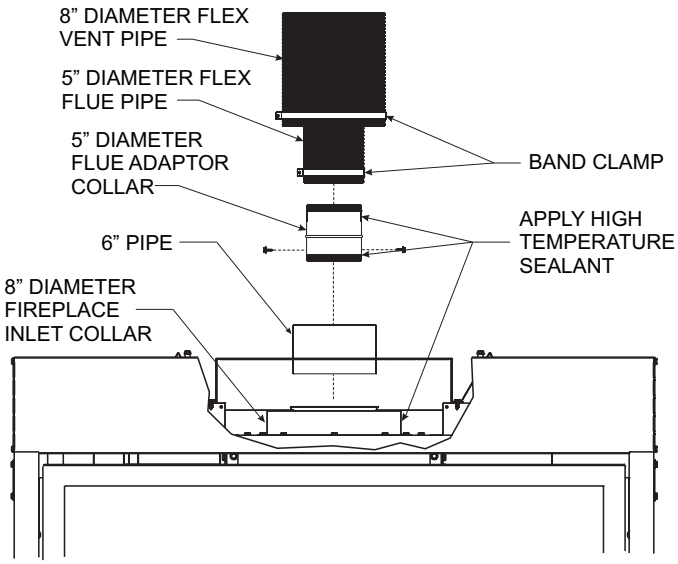

Figure 54

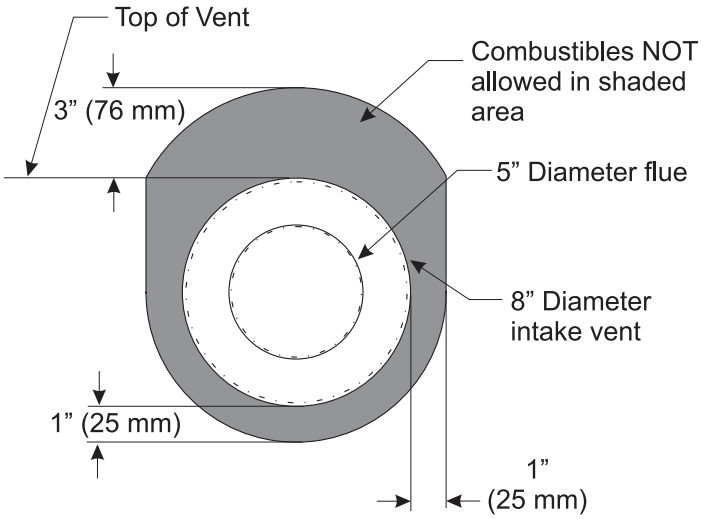

Figure 55

LINER PLACEMENT

Note: Install Ceramic Fiber or Reflective Liner before placing logs. Refer to the instructions that came with your Liner for proper installation.

GLOWING EMBERS

Use only the amount of glowing embers supplied with your fireplace. Applying excess glowing embers may adversely affect fireplace performance. If you mix in platinum embers (for a distinctive glow), remove a like amount of embers from the kit supplied with the fireplace. Tear the embers into dime-size pieces and fluff each piece to maximize the glow. Apply a single layer of embers in the shaded areas. **See Figure 56.**

NOTE: Replacement embers – either regular or platinum – must be purchased from your dealer.

NOTE: Embers break down over time. Remove old embers prior to reapplication.

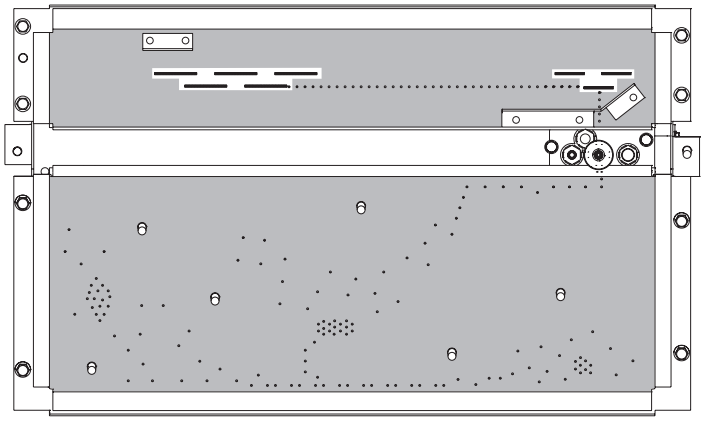

TOP View - Ember Placement Shown in Shaded Area
Figure 56

LOG IDENTIFICATION

Part Number & Description	Front View	Top View
34199 Bottom Rear Log (A)		
34191 Left Log B		
34200 Rear Top Log (C)		
34196 Center Front Log (D)		
34197 Center Left Log (E)		
34192 Front Left Log (F)		
34198 Center Right Log (G)		
34193 Front Right Log (H)		
34195 Log Chunk (I)		
34194 Right Log (J)		

USE ONLY MANUFACTURER'S REPLACEMENT PARTS. USE OF ANY OTHER PARTS COULD CAUSE INJURY OR DEATH.

Attention: When ordering parts, it is very important that **part number** and **description** of part coincide.

LOG PLACEMENT

1. Place Bottom Rear Log (A) onto Burner Pins 1 and 2.

TOP VIEW

Burner Pin Layout

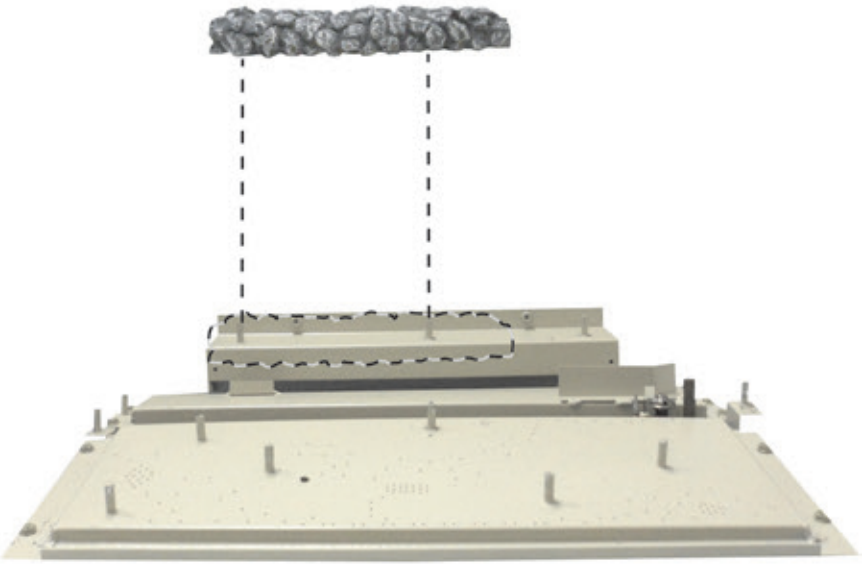

FRONT VIEW

Note: Ember material not shown for clarity.

LOG PLACEMENT

2. Place Left Log (B) onto Burner Pins 3 and 4.

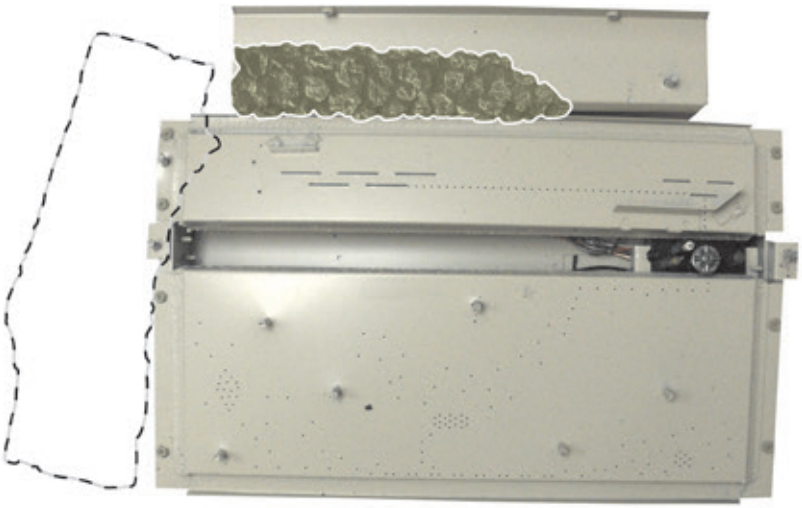

TOP VIEW

Burner Pin Layout

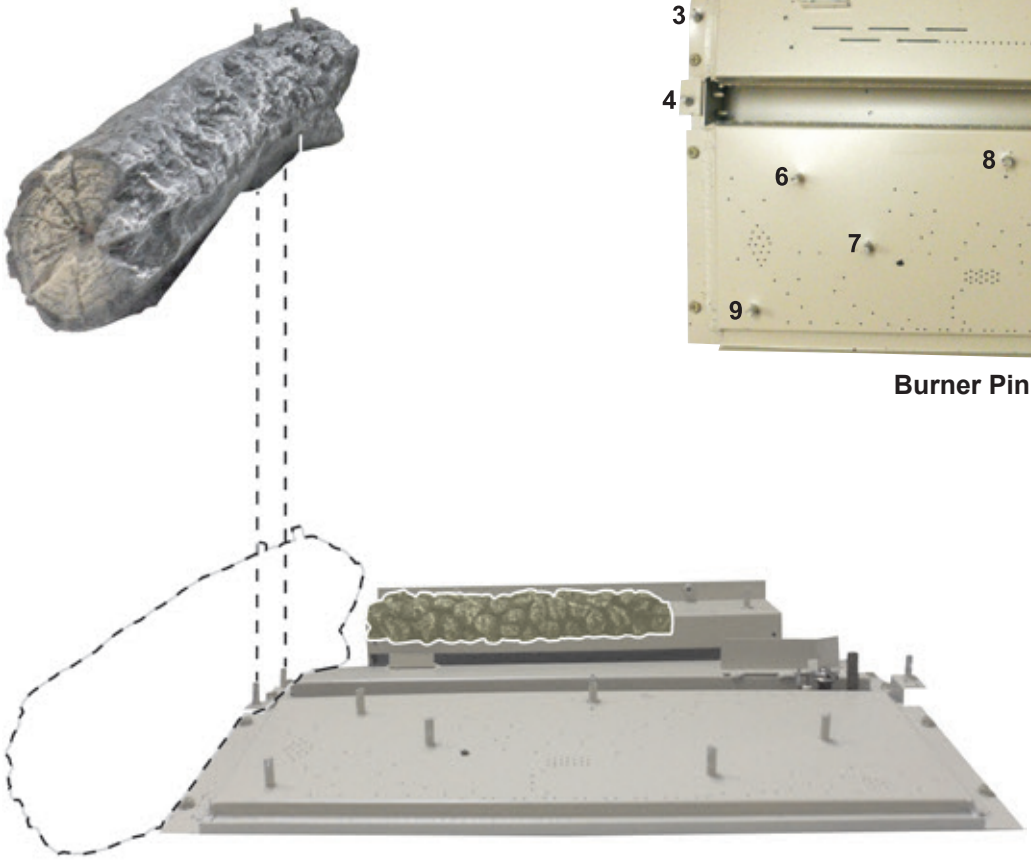

Note: Ember material not shown for clarity.

FRONT VIEW

LOG PLACEMENT

3. Place Rear Top Log (C) onto Burner Pin 5 and the rear pin on Left Log (B).

TOP VIEW

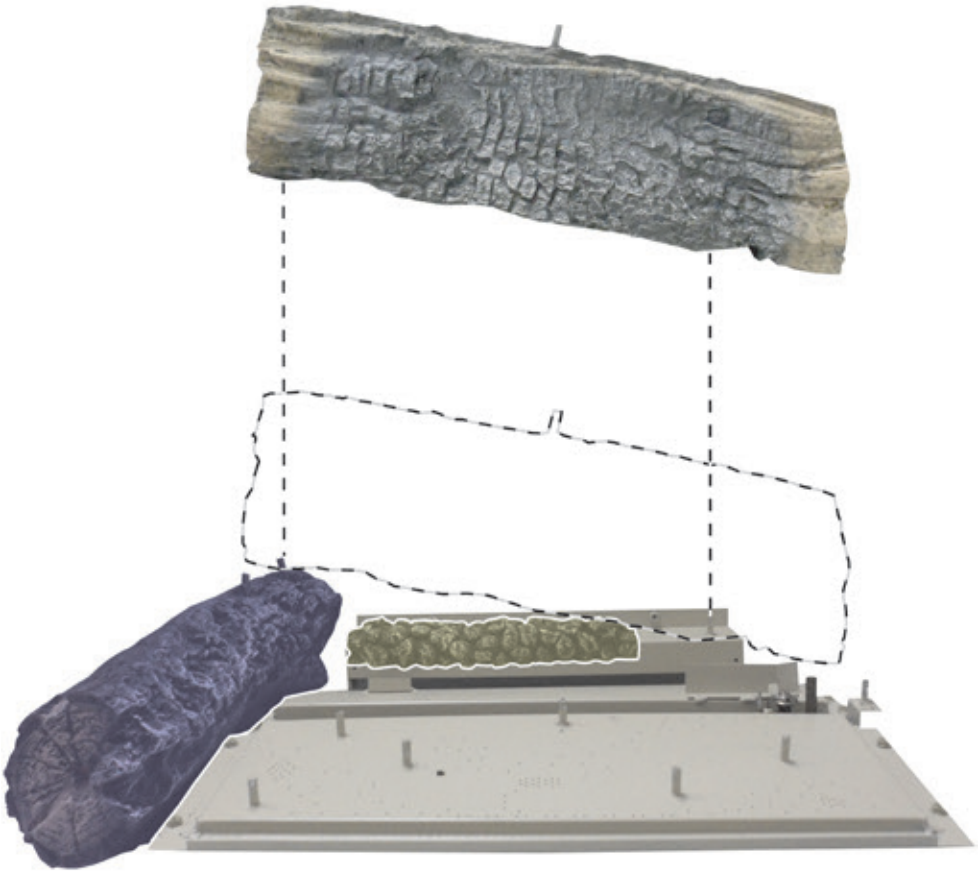

FRONT VIEW

Note: Ember material not shown for clarity.

4. Place Center Front Log (D) onto Burner Pins 6 and 7.

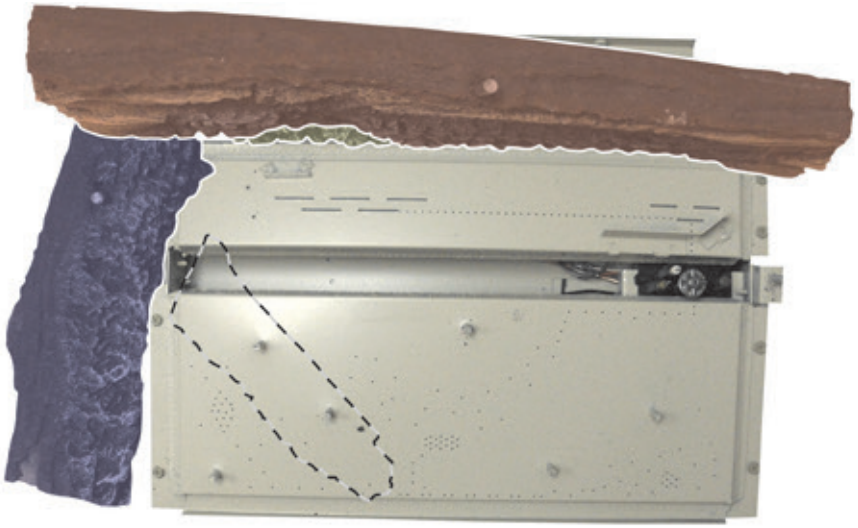

TOP VIEW

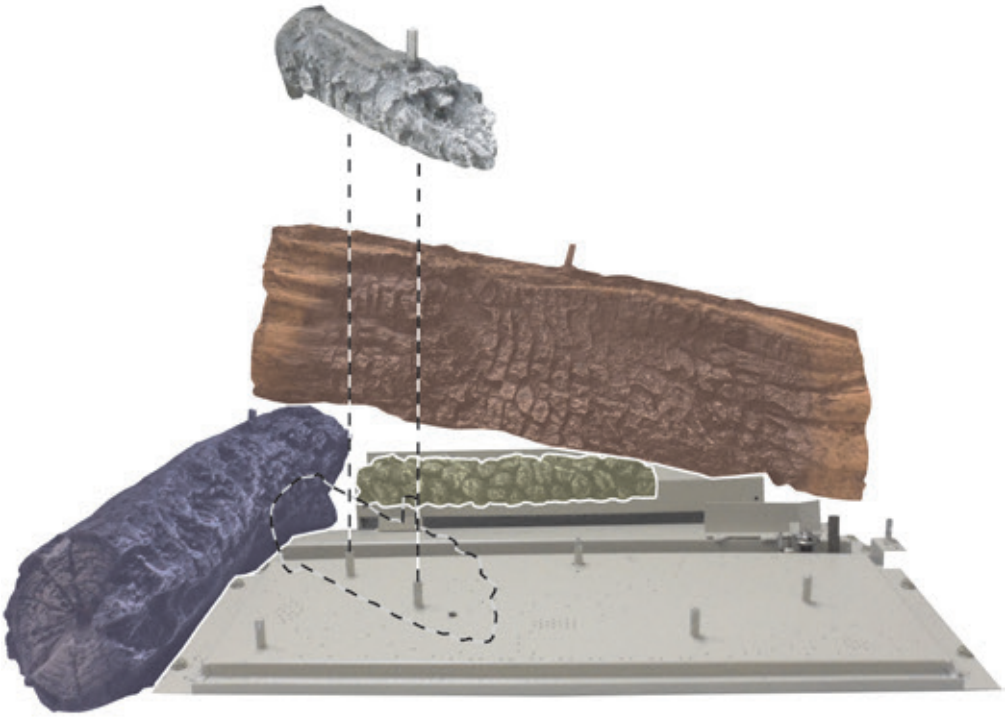

FRONT VIEW

Note: Ember material not shown for clarity.

LOG PLACEMENT

5. Place Center Left Log (E) onto Burner Pin 8 and the front pin on Left Log (B).

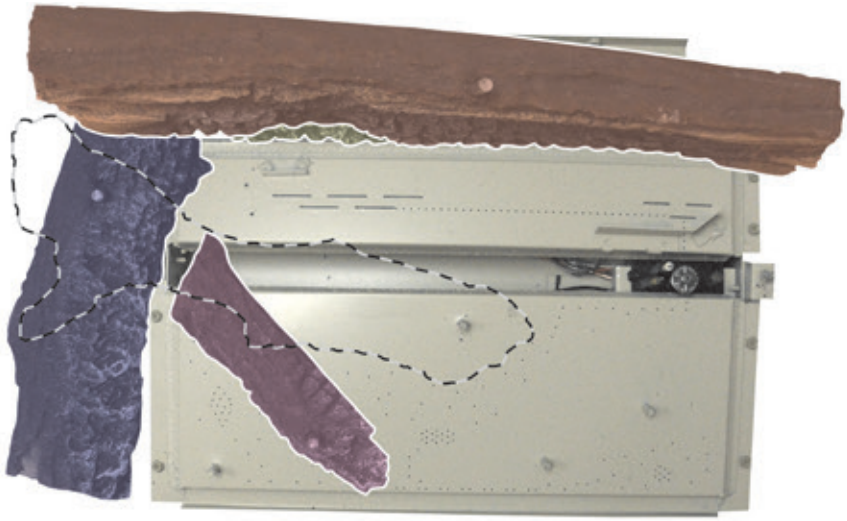

TOP VIEW

Burner Pin Layout

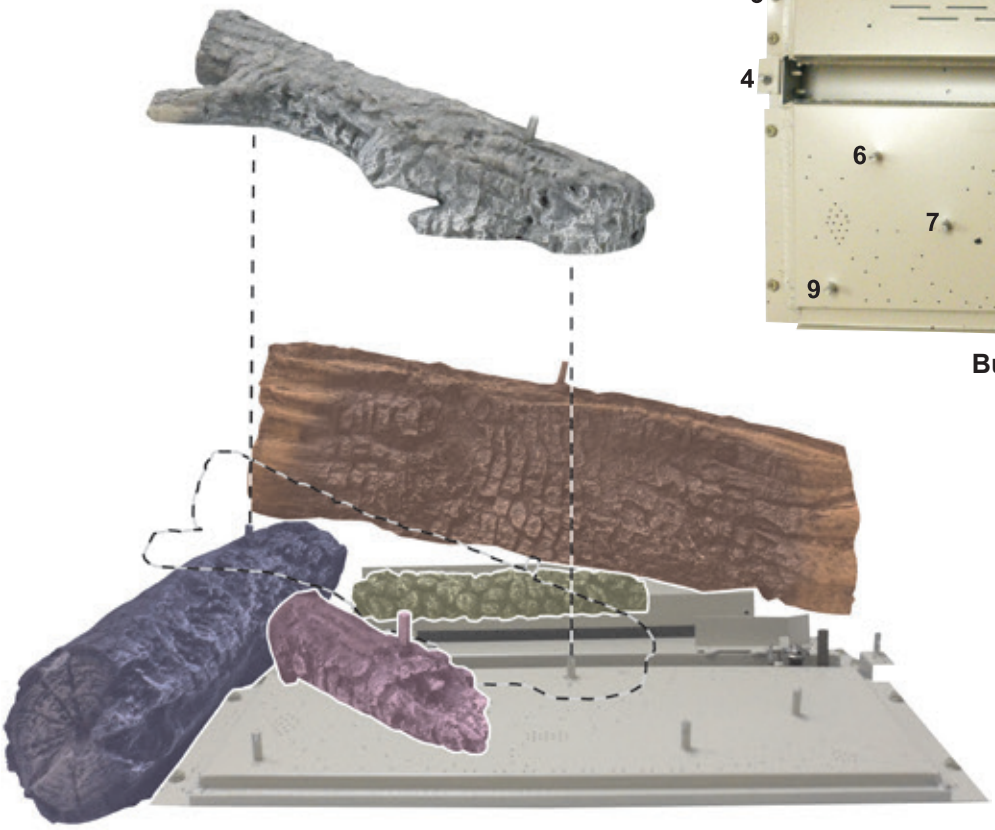

FRONT VIEW

Note: Ember material not shown for clarity.

LOG PLACEMENT

6. Place Left Log (F) onto Burner Pin 9 and the pin on Center Front Log (D).

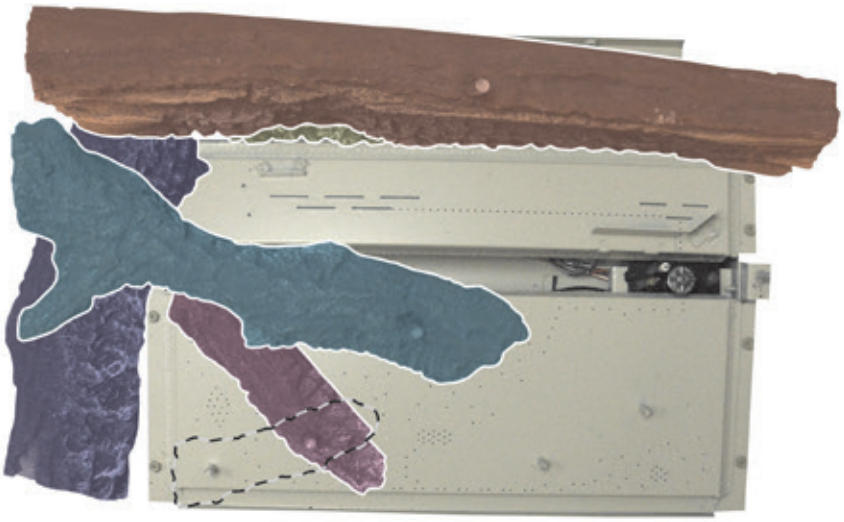

TOP VIEW

Burner Pin Layout

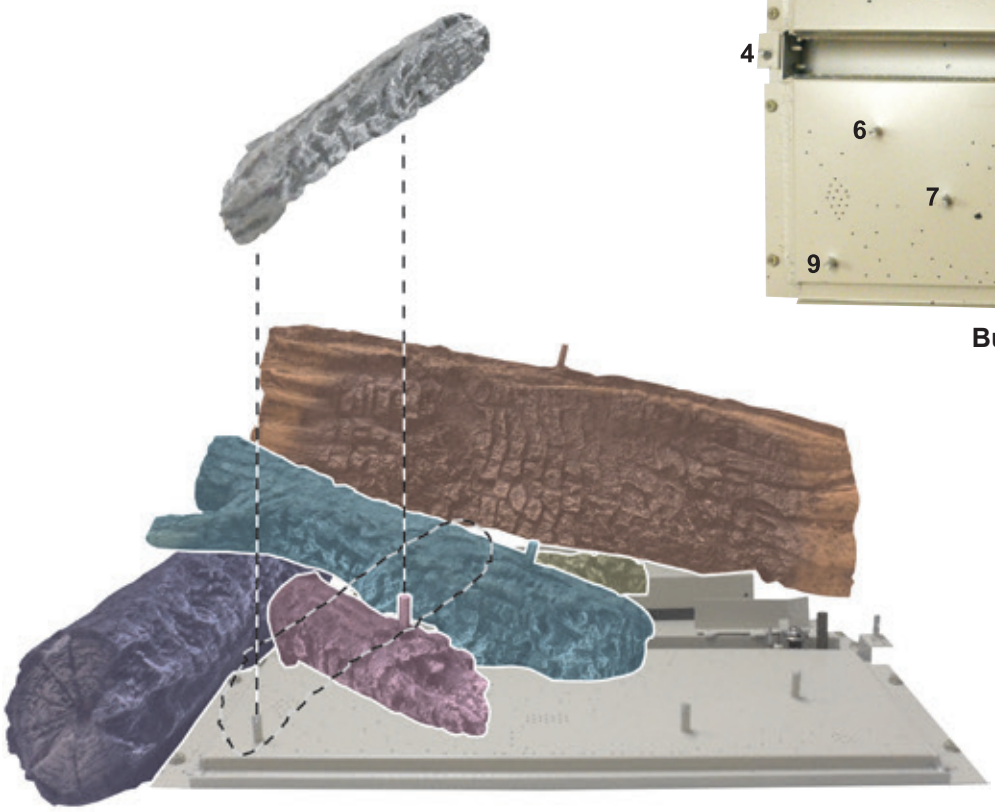

FRONT VIEW

Note: Ember material not shown for clarity.

LOG PLACEMENT

7. Place Center Right Log (G) onto Burner Pin 10 and the pin on Center Left Log (E).

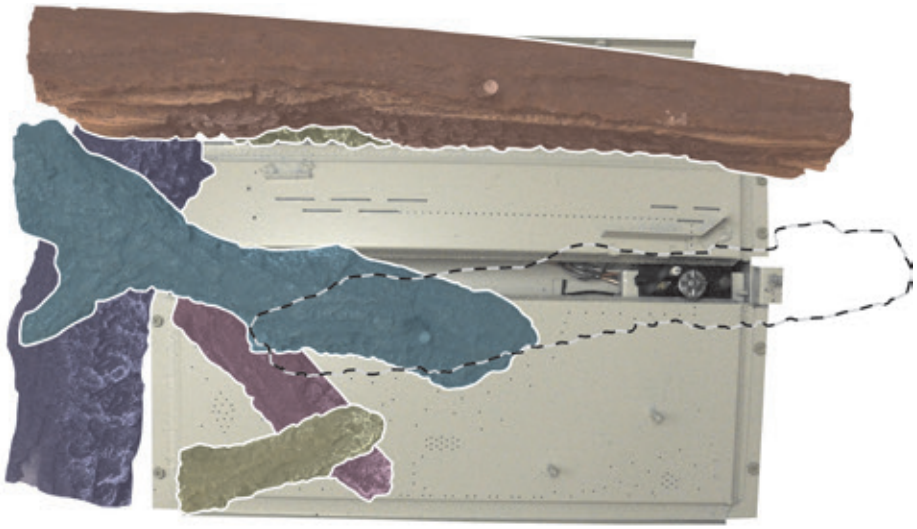

TOP VIEW

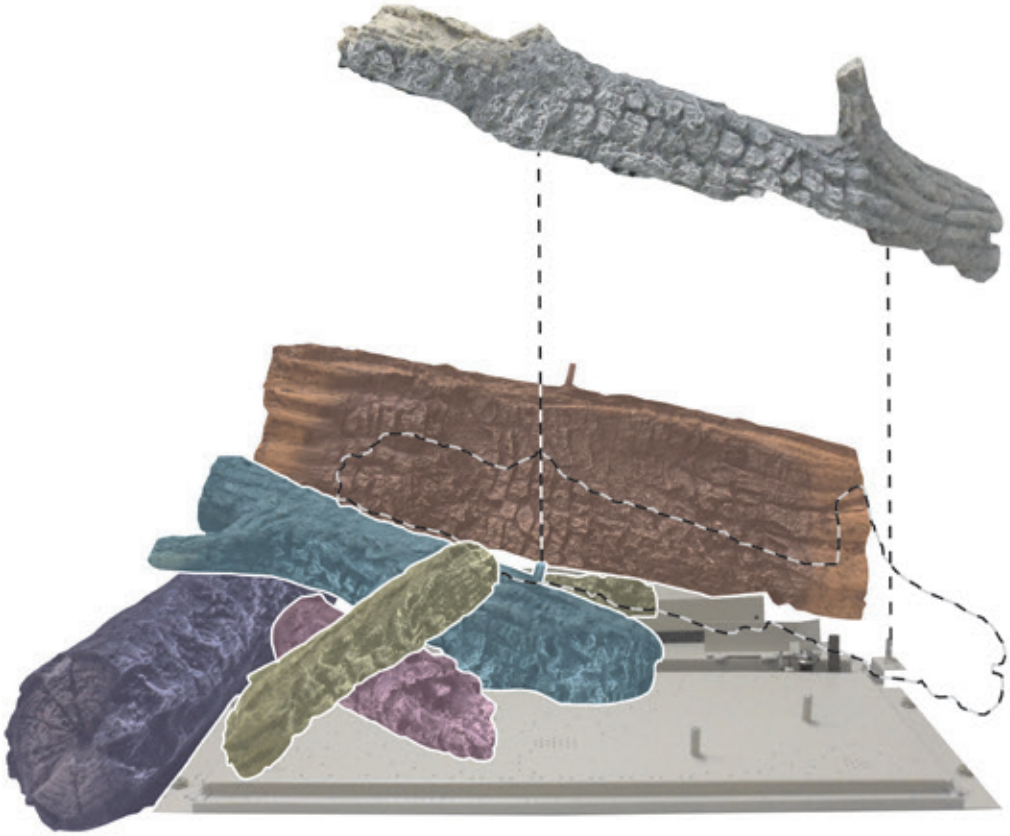

FRONT VIEW

Note: Ember material not shown for clarity.

LOG PLACEMENT

8. Place Front Right Log (H) onto Burner Pins 11 and 12.

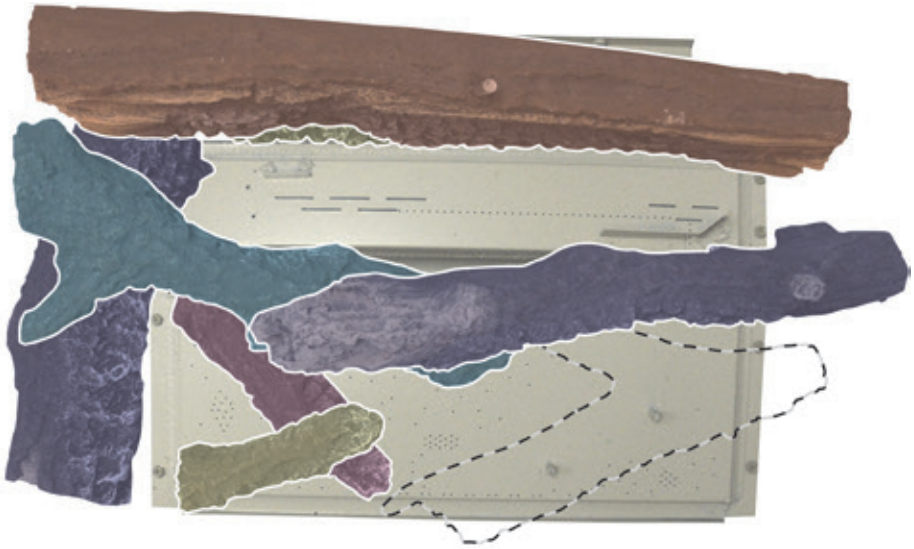

TOP VIEW

Burner Pin Layout

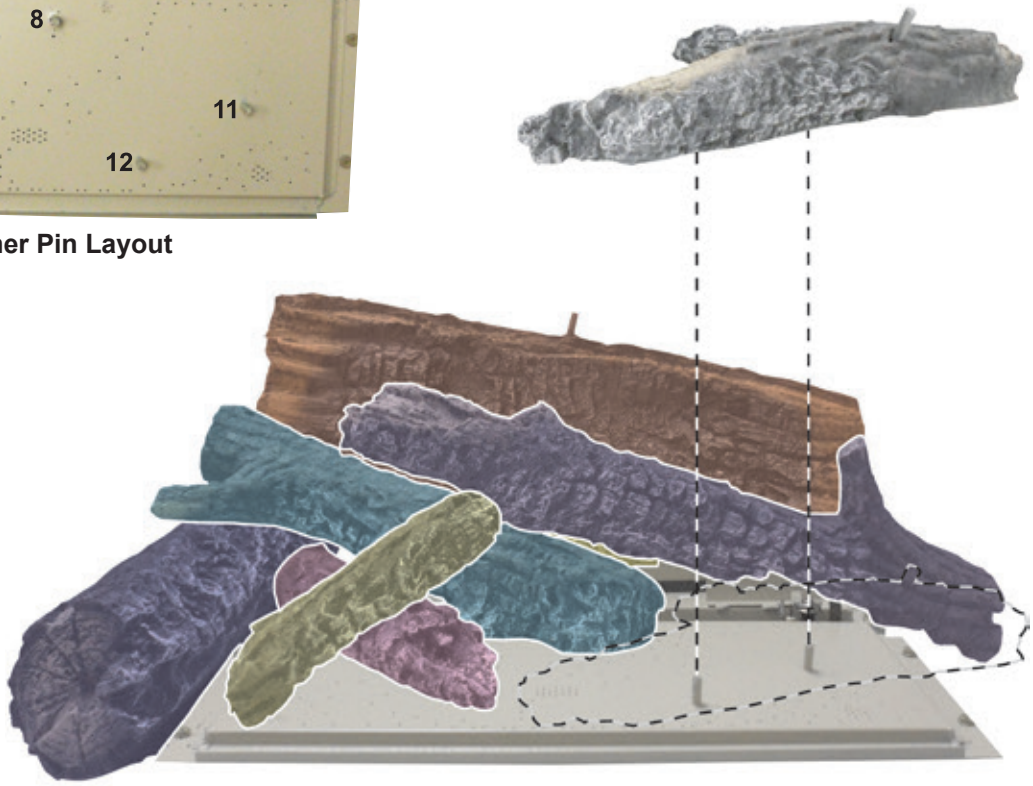

FRONT VIEW

Note: Ember material not shown for clarity.

LOG PLACEMENT

9. Place Log Chunk (I) to the outside of the burner as shown.

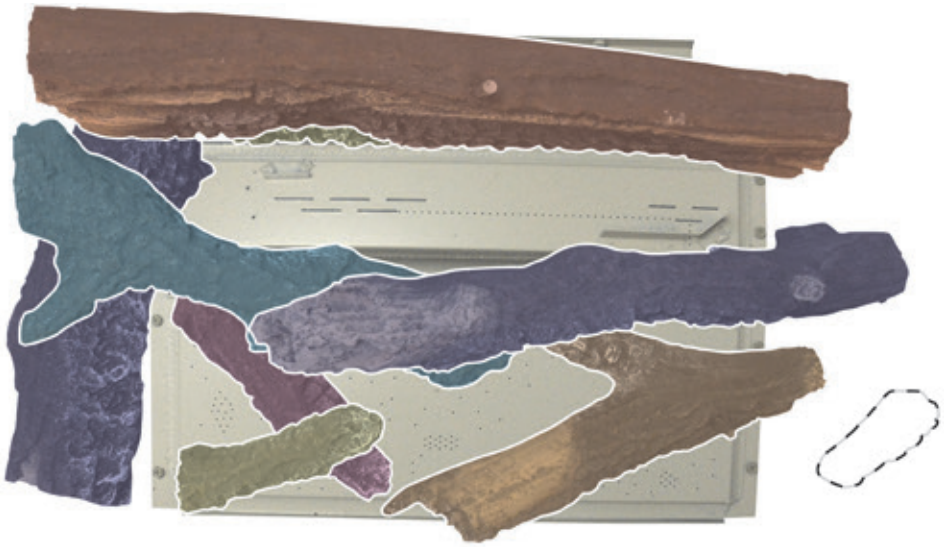

TOP VIEW

FRONT VIEW

Note: Ember material not shown for clarity.

LOG PLACEMENT

10. Place Right Log (J) onto the pins on Rear Top Log (C) and Front Right Log (H).

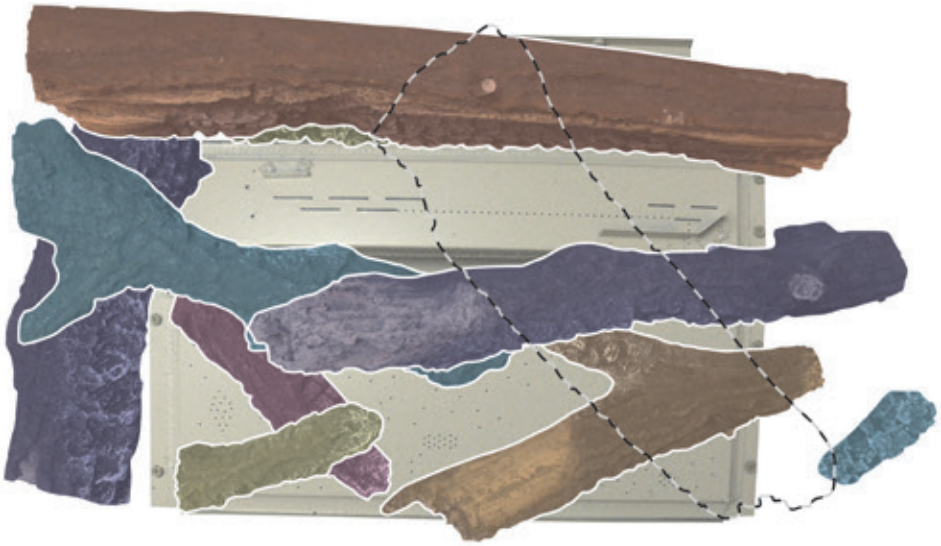

TOP VIEW

Burner Pin Layout

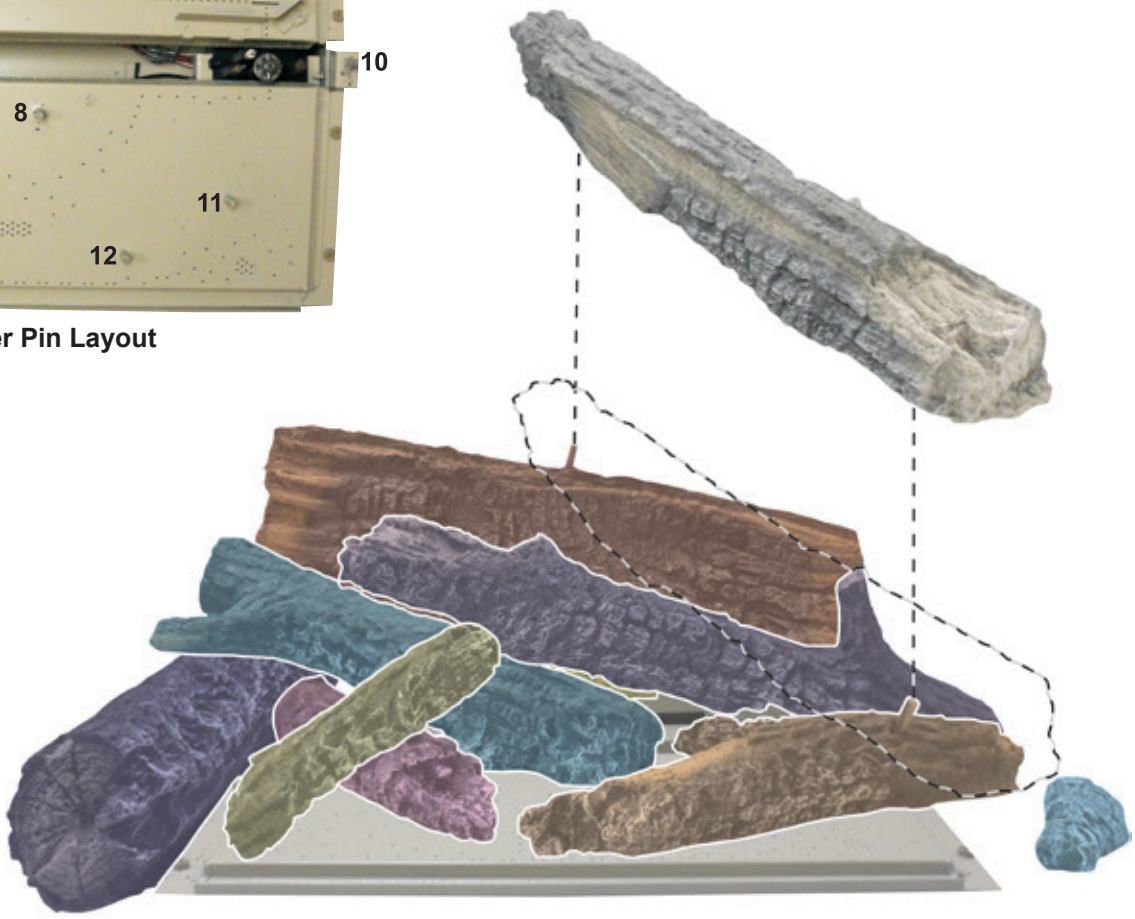

FRONT VIEW

Note: Ember material not shown for clarity.

LOG PLACEMENT

Completed Logset

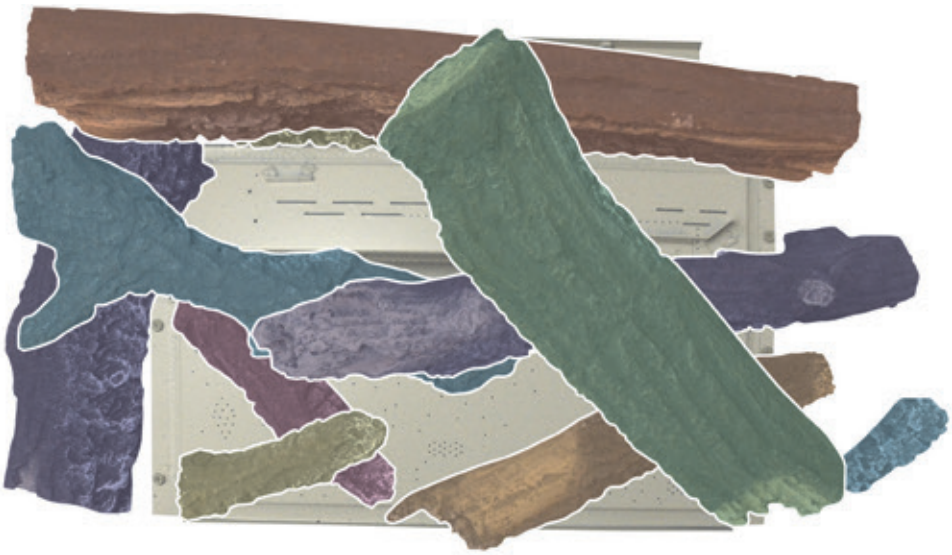

TOP VIEW

FRONT VIEW

Note: Ember material not shown for clarity.

LIGHTING INSTRUCTIONS

FOR YOUR SAFETY READ BEFORE LIGHTING

⚠ WARNING: If you do not follow these instructions exactly, a fire or explosion may result causing property damage, personal injury or loss of life.

A. This appliance is equipped with an ignition device which automatically lights the pilot. Do not try to light the pilot by hand, use the remote control. Before lighting the pilot, ensure that the main on/off switch is on. When lighting the pilot, follow these instructions exactly.

B. Before lighting smell all around the appliance area for gas. Be sure to smell next to the floor because some gas is heavier than air and will settle on the floor.

What To Do If You Smell Gas
- Do not try to light any appliance.
- Do not touch any electrical switch;
- Do not use any phone in your building.
- Immediately call your gas supplier from a neighbor's phone. Follow the gas supplier's instructions.
- If you cannot reach your gas supplier, call the fire department.

C. Use only the remote control to operate the gas valve. Never use tools. If valve does not operate, don't try to repair it, call a qualified service technician. Force or attempted repair may result in a fire or explosion.

D. Do not use this appliance if any part has been under water. Immediately call a qualified service technician to inspect the appliance and to replace any part of the control system and any gas control which has been under water.

LIGHTING INSTRUCTIONS

1. STOP! Read the safety information above.
2. Turn OFF electric power to the appliance.
3. Remove front surround assemblies.
4. Turn gas cock counterclockwise to "ON" position.
5. Wait ten minutes to clear out any gas. Then smell for gas, including near the floor. If you smell gas, STOP! Follow "B" in the safety information above. If you do not smell gas, go to the next step.
6. Tun ON electric power to the appliance.
7. Find pilot. The pilot is behind the burner.
8. Do not try to light the pilot by hand. Turn main flame to ON using your remote. If the pilot does not light within 60 seconds, stop and go to step 5.
9. If the burner or pilot does not operate properly after several tries, turn the gas cock clockwise to "OFF" and call your service technician or gas supplier.
10. Replace the front surround assemblies.
11. Operation of the gas valve is controlled by a hand held remote control. Refer to remote instructions for detailed operation information.

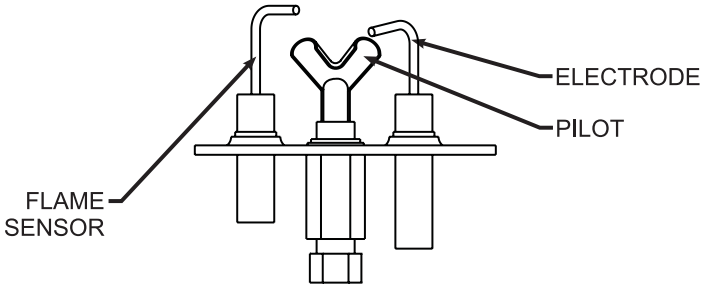

GAS COCK

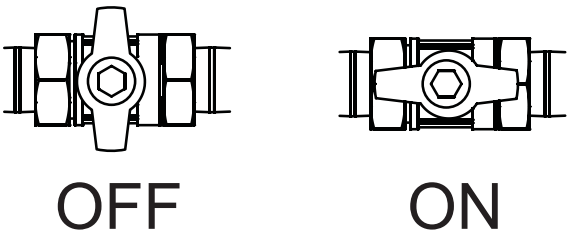

TO TURN OFF GAS TO FIREPLACE

1. Turn off all electric power to the appliance if service is to be performed.
2. Gain access to the control compartment by removing surround assemblies.
3. Locate On/Off gas cock and turn clockwise to "OFF". Do not force.
4. Replace surround assemblies removed in step 2.

IPI SYSTEM WIRING DIAGRAM

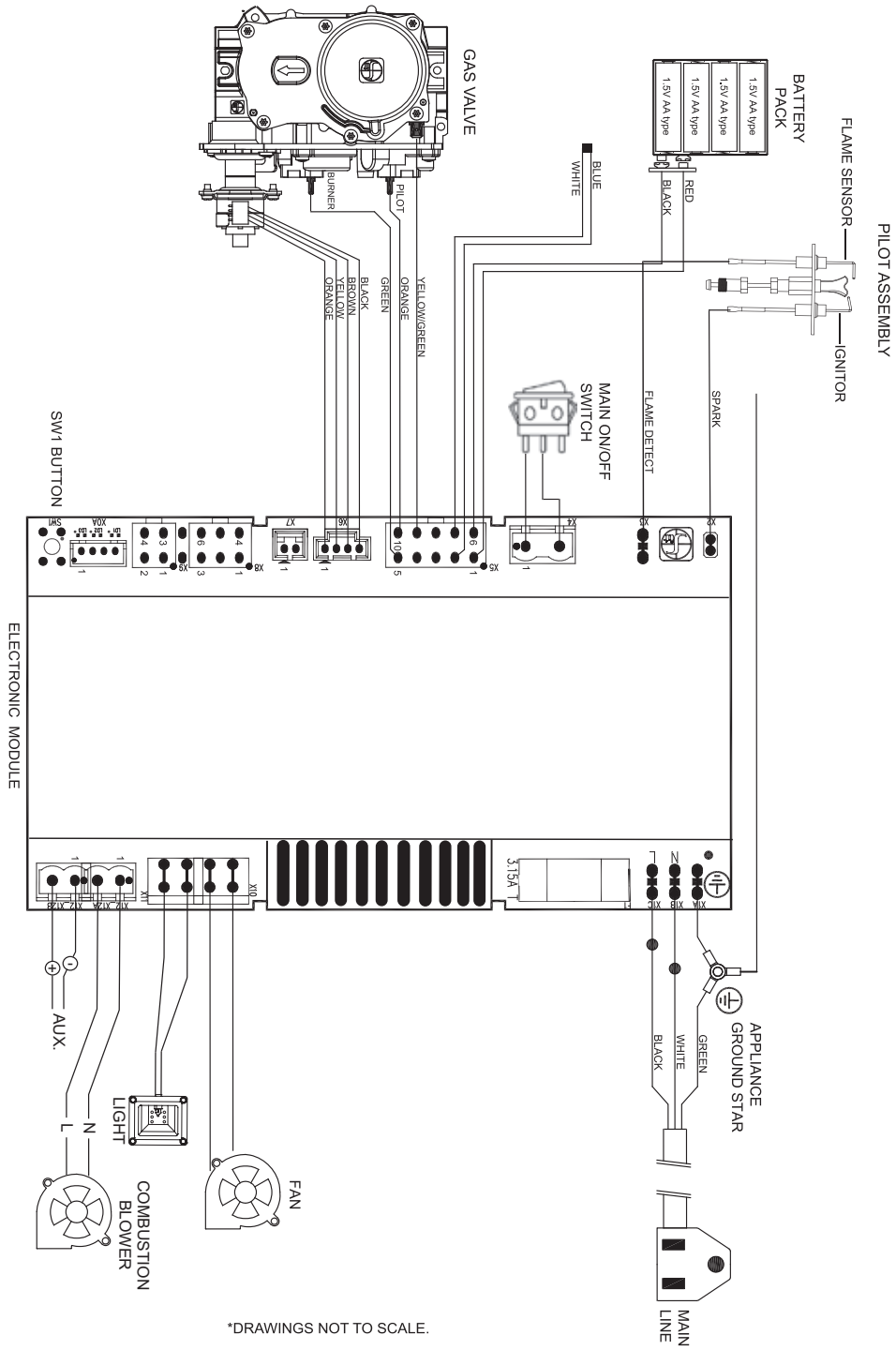

*DRAWINGS NOT TO SCALE.

If any of the original wire as supplied with this unit must be replaced, it must be replaced with equivalent gauge and temperature rated wire.

This appliance is only for use with the type of gas indicated on the rating plate and may be installed in an aftermarket, permanently located, manufactured (mobile) home where not prohibited by local codes. This appliance is not convertible for use with other gases, unless a certified kit is used.

⚠ CAUTION

Do not operate the appliance with glass panel removed, cracked or broken. Replacement of the panel should be done by a licensed or qualified service person.

⚠ WARNING

Improper installation, adjustment, alteration, service or maintenance can cause property damage, personal injury or loss of life. Installation and service must be performed by a qualified installer, service agency or the gas supplier.

REMOTE CONTROL OPERATION INSTRUCTIONS

NOTICE: ON/OFF rocker switch must be ON for the remote to operate.

FEATURES:
Main Burner ON/OFF
Main Burner flame modulation (6 levels)
Choice of standing or intermittent pilot
Thermostat or Smart thermostat functions
On/Off relay*
Comfort Fan speed modulation (6 levels)
Accent Light modulation (6 levels)

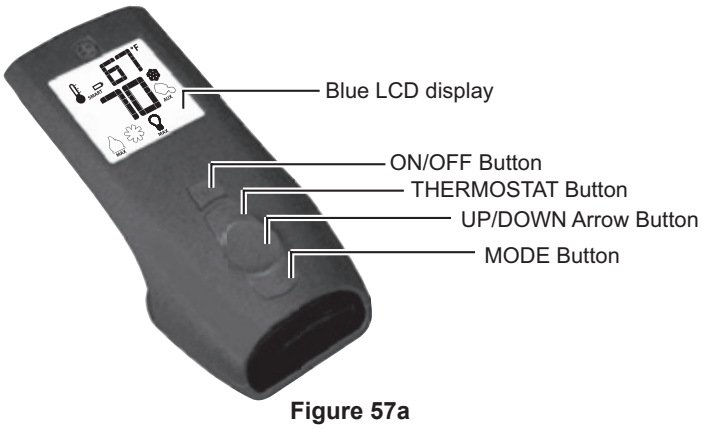

Figure 57a

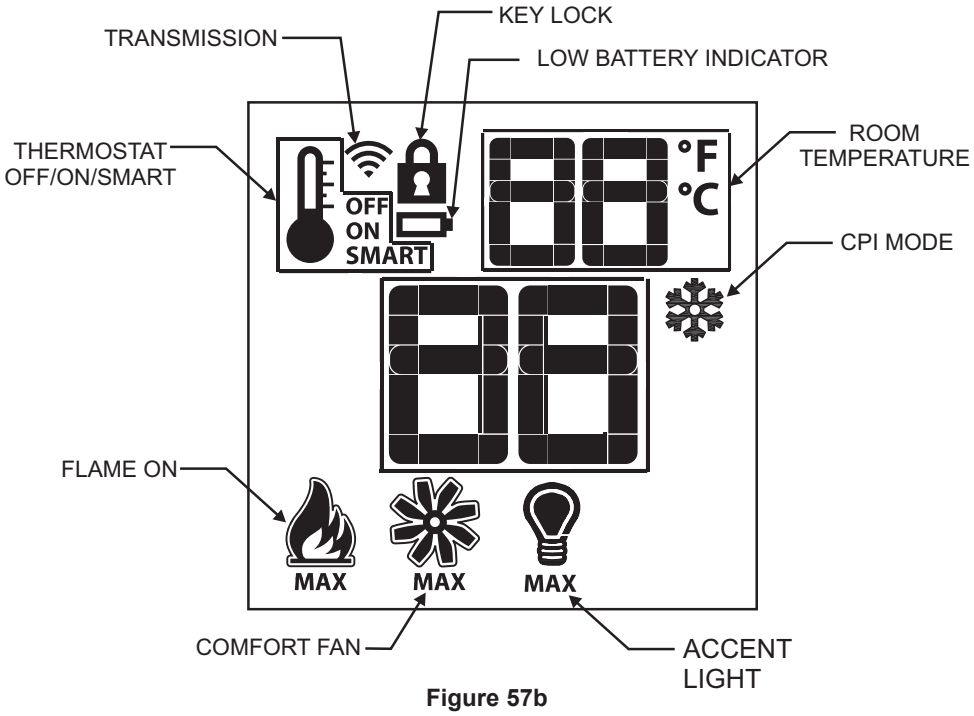

Figure 57b

REMOTE CONTROL INFORMATION
Supply Voltage: 4.5 V (three 1.5 V AAA batteries)
Ambient Temperature Ratings: 0 - 50°C (32 - 122°F)
Radio Frequency: 315 MHz

NOTICE: THE TRANSMITTER AND RECEIVER ARE RADIO FREQUENCY DEVICES. PLACING THE RECEIVER IN OR NEAR METAL SEVERELY REDUCES THE SIGNAL RANGE.

NOTICE: TURN "OFF" THE MAIN GAS SUPPLY OF THE APPLIANCE DURING INSTALLATION OR MAINTENANCE OF THE RECEIVER DEVICE.

NOTICE: FOR INSTALLATION/MAINTENANCE, SWITCH OFF THE INSERT BY REMOVING MAIN POWER SUPPLY AND BATTERIES IF INSTALLED.

⚠ WARNING

- **FIRE HAZARD. Can cause severe injury or death.**
- **The Transmitter causes ignition of the appliance. The appliance can turn on suddenly.**
- **Keep away from the appliance burner when operating the remote system.**

REMOTE CONTROL OPERATION INSTRUCTIONS

INITIALIZING THE SYSTEM FOR THE FIRST TIME

1. Install the three AAA type batteries in the Transmitter battery bay located on the base of the Transmitter (back side). **See Figure 58.**
2. Power the receiver
3. With the ON/OFF rocker switch turned ON, press red button on the module.
4. The Receiver will “beep” three times to indicate that it is ready to synchronize with a Transmitter.
5. With the batteries already installed in the Transmitter, push the “ON” button. The Receiver will “beep” to indicate the Transmitter’s command is accepted and set to the particular code of that Transmitter.
6. The system is now initialized.

Figure 58

TEMPERATURE INDICATION DISPLAY

With the system in the “OFF” position, press the THERMOSTAT key and the MODE key at the same time.
Look at the LCD screen on the Transmitter to verify that a °C or °F is visible to the right of the Room Temperature display. **See Figures 59a and 59b.**

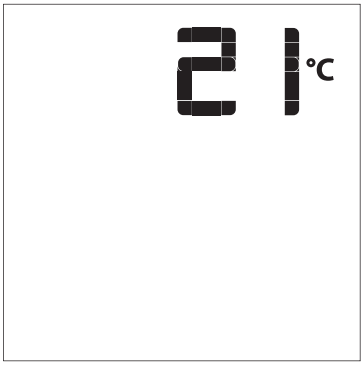

Figure 59a - Degrees Celsius

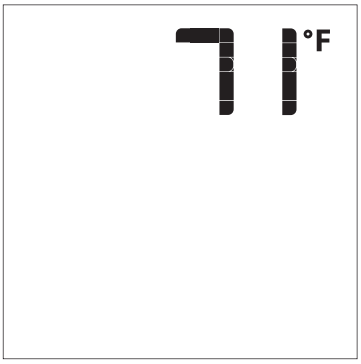

Figure 59b - Degrees Fahrenheit

TURN THE APPLIANCE ON AND OFF

1. With the system OFF, press the ON/OFF key on the Transmitter. The Transmitter LCD display will show some other active Icons on the screen. At the same time the Receiver will activate the appliance.
2. A “beep” from the Receiver will confirm reception of the command.
3. TURN OFF THE APPLIANCE
4. With the system ON , press the ON/OFF Key on the Transmitter. The Transmitter LCD display will show the room temperature. **See Figure 60.** At the same time the Receiver will turn off the appliance.
5. A “beep” from the Receiver confirms reception of the command.

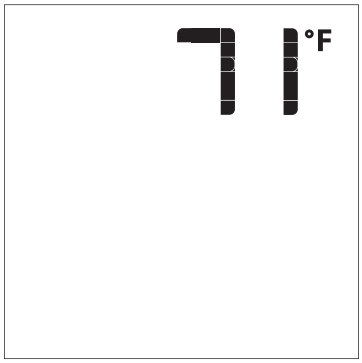

Figure 60

REMOTE FLAME CONTROL
The Proflame has six flame levels.

With the system ON and the flame level at the maximum in the appliance, pressing the DOWN ARROW key once will reduce the flame height by one step until the flame is turned OFF.

The UP ARROW key will increase the flame height each time it is pressed.

If the UP ARROW key is pressed while the system is ON but the flame is OFF, the flame will come ON in the high position.

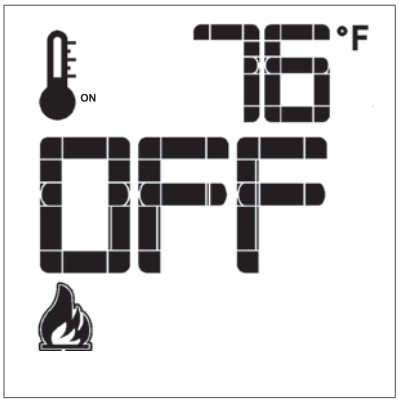

Figure 61 - Flame OFF

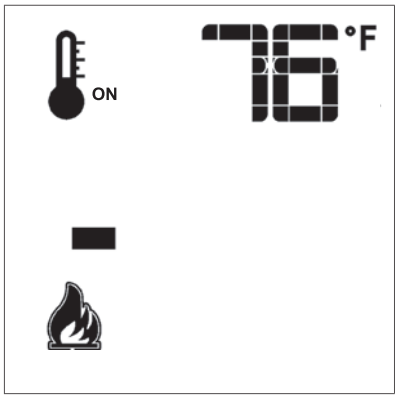

Figure 62 - Flame Level 1

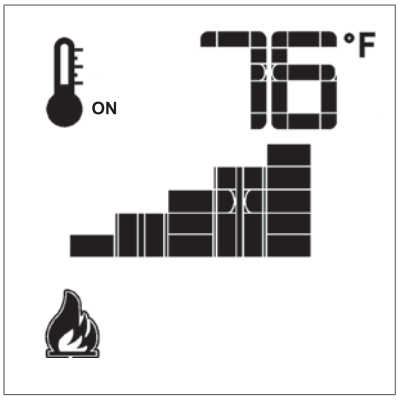

Figure 63 - Flame Level 5

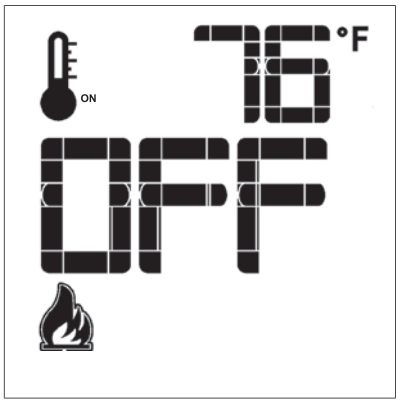

Figure 64 - Flame Level Maximum

THERMOSTAT TRANSMITTER OPERATION
The Remote Control can operate as a room thermostat. The thermostat can be set to a desired temperature to control the comfort level in a room.

To activate the function, press the THERMOSTAT key. **See Figure 57a.** The LCD display on the Transmitter will change to show that the room thermostat is “ON” and the set temperature is now displayed. **See Figure 65.**

To adjust the set temperature, press the UP or DOWN ARROW keys until the desired set temperature is displayed on the LCD screen of the Transmitter.

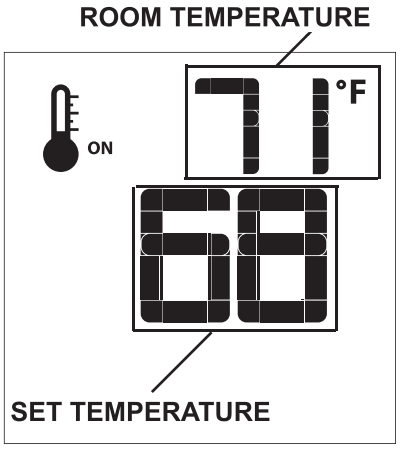

Figure 65

SMART THERMOSTAT OPERATION

The Smart Thermostat function adjusts the flame height in accordance with the difference between the set point temperature and the actual room temperatures.

As the room temperature gets closer to the set point the Smart Function will modulate the flame down.

To activate this function, press the THERMOSTAT key until the word “SMART” appears to the right of the temperature bulb graphic.

To adjust the set temperature, press the UP or DOWN ARROW keys until the desired set temperature is displayed on the LCD screen of the Transmitter.

NOTICE: When Smart Thermostat is activated, the manual flame height adjustment is disabled.

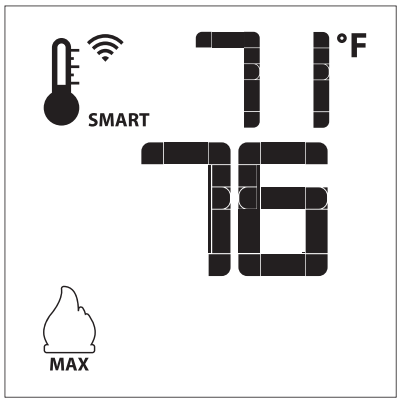

Figure 66 - SMART Function Icon

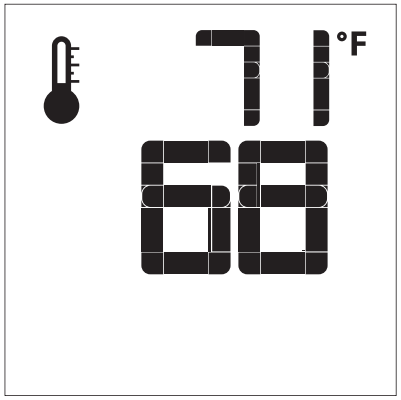

Figure 67

FAN SPEED CONTROL

The speed of the fan can be controlled by the Proflame system. The fan speed can be adjusted through six speeds.
To activate this function, use the MODE key **(Figure 57a)** to index to the fan control icon. **See Figure 68.**
Use the UP/DOWN ARROW keys to turn on, off or adjust fan speed. **See Figures 57a and 69.**
A single “beep” will confirm reception of the command.

Figure 68 - Fan Icon

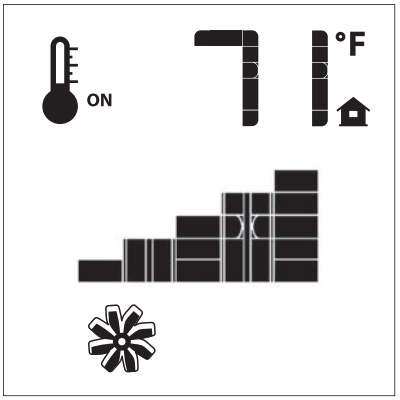

Figure 69 - Fan Speed Control Activated

ACCENT LIGHT CONTROL

The light function controls the light by the dimmable light control. To activate this function, use the Mode Button **(Figure 57a)** to index to the Light icon. **See Figures 70 and 71.**

The intensity of the output can be adjusted through six levels. Use the Up/Down Arrow Buttons **(Figure 57a)** to adjust the output level. A single “beep” will confirm reception of the command.

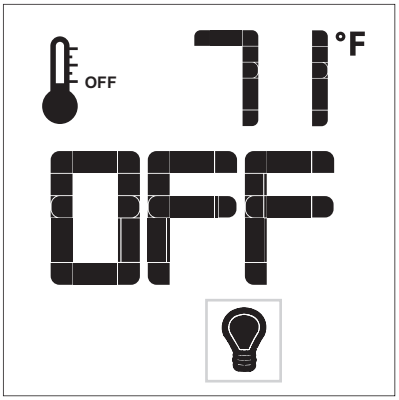

Figure 70

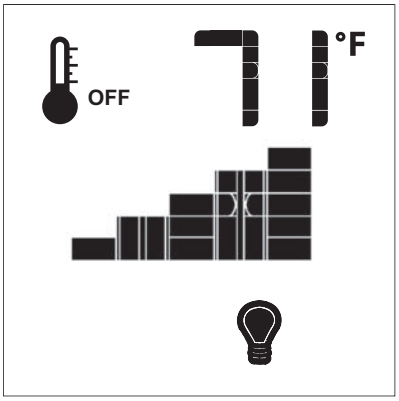

Figure 71

CONTINUOUS PILOT/INTERMITTENT PILOT (CPI/IPI) SELECTION

With the system in “OFF” position press the MODE key **(Figure 57a)** to index to the CPI mode icon. **See Figures 72 and 73.**

Pressing the UP ARROW key will activate the Continuous Pilot Ignition mode (CPI).

Pressing the DOWN ARROW key will return to IPI.

A single “beep” will confirm the reception of the command.

Figure 72

Figure 73

KEY LOCK

This function will lock the keys to avoid unsupervised operation.

To activate this function, press MODE and UP keys at the same time. A Lock and Key icon will appear to the right of the temperature icon.

To deactivate this function, press MODE and UP Keys at the same time.

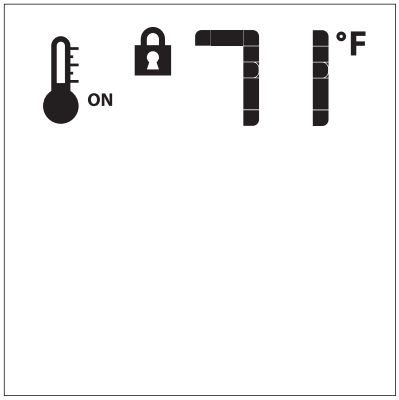

Figure 74

LOW BATTERY DETECTION

The life span of the remote control batteries depends on various factors: quality of the batteries used, the number of ignitions of the appliance, the number of changes to the room thermostat set point, etc.

When the Transmitter batteries are low, a Battery icon will appear on the LCD display of the Transmitter **(Figure 75)** before all battery power is lost. When the batteries are replaced, this icon will disappear.

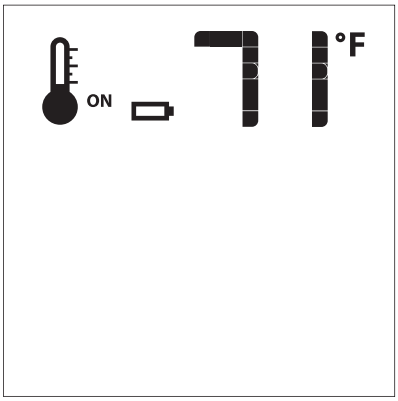

Figure 75

USING WITHOUT A REMOTE CONTROL

Remove the decorative front and outer surround to access the module. With the ON/OFF rocker switch in the ON position, press with SW1 button on the module. The module will beep 3 times to indicate that it is ready to synchronize with a remote. If no remote is found, the module will enter Manual Mode and the flame and pilot will light. The insert can now be turned ON and OFF with the rocker switch. To enter Remote Mode again, follow the initialization sequence in 15C.

BATTERY BACKUP OPERATION

To operate the insert on Battery Backup, remove the decorative front and outer surround to access the module. Locate the battery holder and install 4 AA batteries into it. The insert will now operate without flame level adjustment or fan.

LOW BATTERY DETECTION MODULE

When the module batteries are low, a double-beep will be emitted when it receives an ON/OFF command. No more commands will be accepted until the batteries are changed or the insert is plugged in.

INTERMITTENT PILOT PARTS VIEW

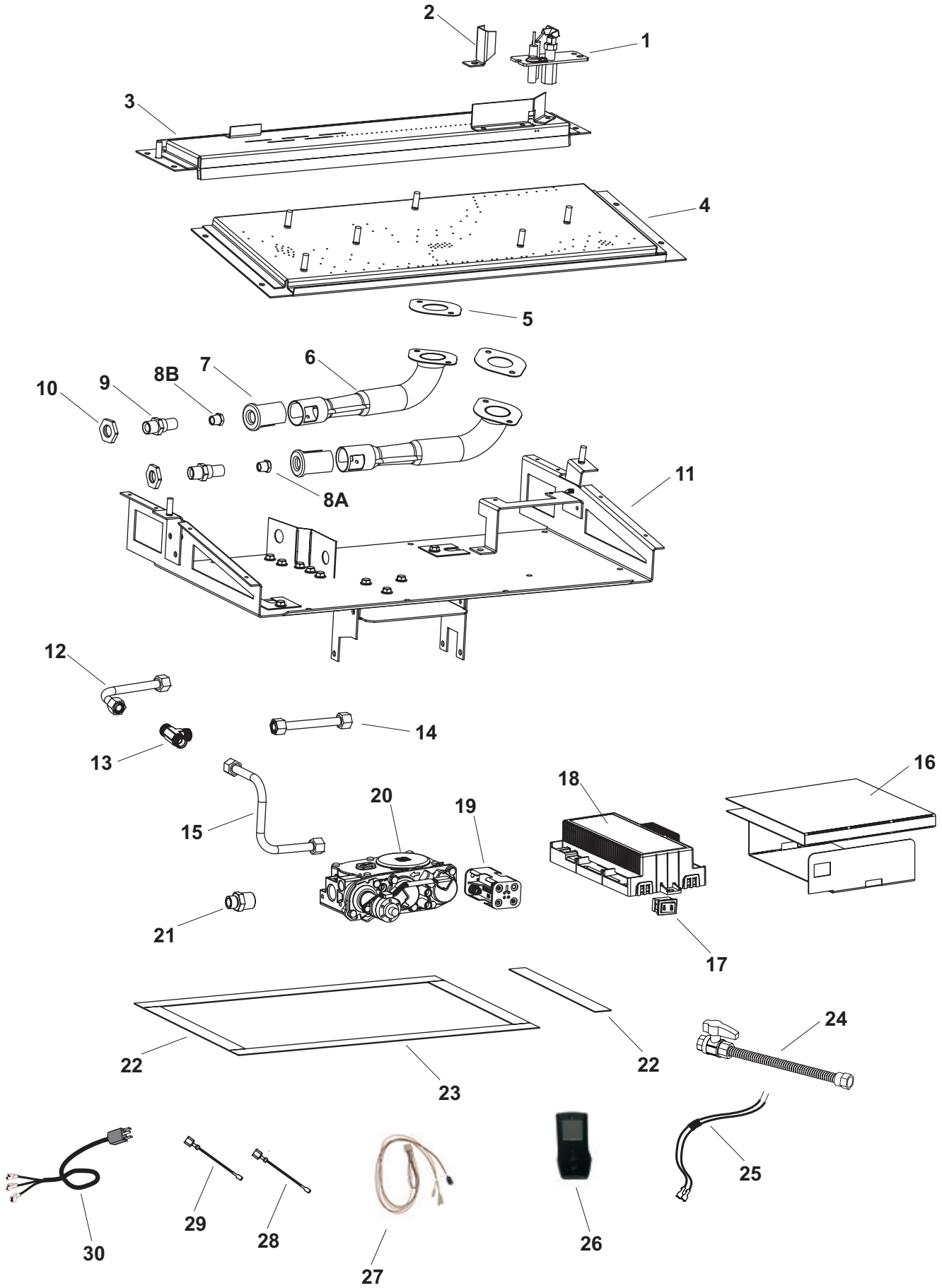

INTERMITTENT PILOT PARTS LIST

INDEX NO.	PART NO.		DESCRIPTION
	ADVCX36	ADVCX42	
1	R11585	R11585	PILOT ASSEMBLY, NAT
1	R11586	R11586	PILOT ASSEMBLY, LPG
2	33633	33633	THERMOCOUPLE SHIELD
3	34005	34005	BURNER REAR WELDED ASSEMBLY
4	34006	34006	BURNER FRONT WELDED ASSEMBLY
5	R10602	R10602	VENTURI GASKET (QTY. 2)
6	R10432	R10432	VENTURI (QTY. 2)
7	R7624	R7624	AIR SHUTTER (QTY. 2)
8A	P311	N/A	FRONT ORIFICE #47 - NAT
8A	P321	N/A	FRONT ORIFICE #58 - LP
8A	N/A	P252	FRONT ORIFICE #44 - NAT
8A	N/A	P320	FRONT ORIFICE #57 - LP
8B	P286	N/A	REAR ORIFICE #42 - NAT
8B	P208	P208	REAR ORIFICE #1.45mm - LP
8B	N/A	P257	REAR ORIFICE #40 - NAT
9	R11675	R11675	ORIFICE HOLDER (QTY. 2)
10	R7572	R7572	JAMB NUT, 1/4”-18 NPS (QTY. 2)
11	34037	34037	BURNER SUB-ASSEMBLY
12	33003	33003	TUBING ASSEMBLY, INLET - REAR
13	R11862	R11862	CONNECTOR, BRASS COMPRESSION TEE
14	33002	33002	TUBING ASSEMBLY, INLET - FRONT
15	33624	33624	TUBING ASSEMBLY, INLET
16	35154	35154	MODULE TRAY
17	R2522	R2522	SWITCH, ON/OFF
18	R12383	R12383	RECEIVER MODULE
19	R11122	R11122	BATTERY HOLDER, AA WITH SNAP-ON
20	R11233	R11233	VALVE, NAT
20	R11234	R11234	VALVE, LPG
21	R2423	R2423	CONNECTOR, MALE 5/16 X 3/8 NPT
22	17626	17626	GASKET, 3/4” X 7” (QTY. 3)
23	17625	17625	GASKET, 3/4” X 13 3/4” (QTY. 2)
24	R7591	R7591	FLEXLINE 3/8 X 12 WITH SHUTOFF
25	R11516	R11516	WIRE HARNESS
26	R11522	R11522	TRANSMITTER
27	R11524	R11524	WIRE HARNESS, RECEIVER
28	R11033	R11033	WIRE ASSEMBLY, WHITE
29	R11034	R11034	WIRE ASSEMBLY, ORANGE
30	R7615	R7615	CORDSET
N/S	B076529	B076529	BATTERY, AA
N/S	R10600	R10600	BATTERY, AAA

N/A - Part not applicable for that particular unit.

N/S - Part not shown on Parts View.

⚠ WARNING

USE ONLY MANUFACTURER’S REPLACEMENT PARTS. USE OF ANY OTHER PARTS COULD CAUSE INJURY OR DEATH.

FIREPLACE - ALL UNITS PARTS VIEW

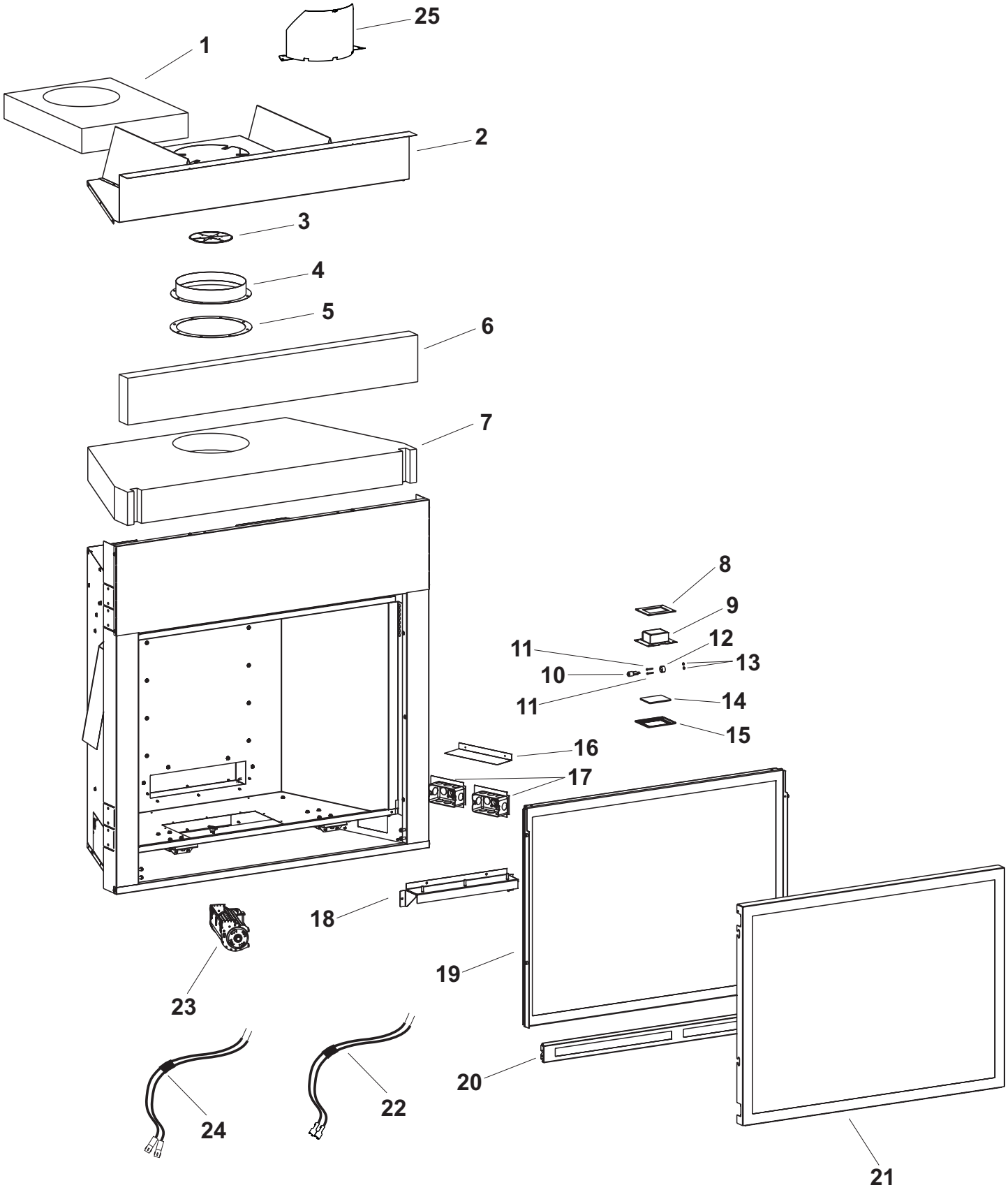

FIREPLACE - ALL UNITS PARTS LIST

INDEX NO.	PART NO.		DESCRIPTION
	DVCX36	DVCX42	
1	R11935	R11935	INSULATION TOP, CENTER
2	34050	34051	OUTER WRAPPER TOP ASSEMBLY
3	34054	34054	FLUE RESTRICTOR ASSEMBLY - NAT
3	34062	34062	FLUE RESTRICTOR ASSEMBLY - LPG
4	R7567	R7567	INLET VENT ADAPTER, 8
5	R7573	R7573	GASKET, INLET VENT
6	R11947	R11948	INSULATION TOP, FACE
7	R11936	R11937	INSULATION TOP
8	R11751	R11751	GASKET, ACCENT LAMP
9	30955	30955	BRACKET, ACCENT LIGHT
10	R10928	R10928	LIGHT BULB
11	R11138	R11138	SCREW, 4-40 X 3/4 (2 REQUIRED)
12	R11721	R11721	LIGHT SOCKET ASSEMBLY
13	R8850	R8850	NUT, 4-40 (2 REQUIRED)
14	R11752	R11752	GLASS, ACCENT LAMP
15	R9342	R9342	BEZEL, ACCENT LAMP
16	17357	17357	JUNCTION BOX SHIELD
17	17162	17162	JUNCTION BOX ASSEMBLY
18	34052	34052	REAR LOG SUPPORT ASSEMBLY
19	35108	35109	GLASS FRAME ASSEMBLY COMPLETE
20	32960	32994	LOWER PANEL
21	34987	34988	SCREEN ASSEMBLY COMPLETE
22	R11238	R11238	WIRE ASSEMBLY - LIGHT
23	R2804	R2804	BLOWER ASSEMBLY
24	R12010	R12010	WIRE ASSEMBLY - BLOWER
25	25520	25520	HEAT SHIELD, FLUE
N/S	R3492	R3492	RECEPTICAL, 3-PRONG
N/S	R3491	R3491	COVER, JUNCTION BOX

N/S - Part not shown on the Parts View.

⚠ WARNING

USE ONLY MANUFACTURER'S REPLACEMENT PARTS. USE OF ANY OTHER PARTS COULD CAUSE INJURY OR DEATH.

MAINTENANCE AND SERVICE

NOTE

It is normal for steel appliances to make expansion and/or contraction noise during the start-up or cool-down cycle. Similar noises are found with your furnace heat exchanger or car engine.
It is normal for your gas fireplace to give off some odor the first time it is burned. This is due to the curing of the paint and any oil from the manufacturing process.
If odor becomes offensive, open windows.

Burn the fireplace for at least six hours the first time you use it. If optional fan kit has been installed, place fan in the "OFF" position during this time.

IMPORTANT: Turn off gas before servicing appliance. Have a qualified service person perform these check-ups at the beginning of each heating season.

- **Clean Burner and Control Compartment**
  Keep the control compartment, logs, and burner areas surrounding the logs clean by vacuuming or brushing at least twice a year.

Cleaning Procedure

1. Turn off pilot light at gas valve.
2. Remove glass front. (See Glass Removal)
3. Vacuum burner compartment.
4. Reinstall glass front.
5. Ignite pilot. (See Lighting Instructions)
6. Operate the pilot burner. If it appears abnormal call a service person.

- **Check Vent System**
  Inspect the appliance and venting system before initial use and at least annually. Inspect the external vent cap on a regular basis to make sure no debris is interferes with the air flow.

Glass Cleaning

Clean the glass periodically. During start-up, condensation forms on the inside of the glass causing lint, dust and other airborne particles to cling to the glass. Also initial paint curing may deposit a film on the glass. Allow the fireplace to cool and then clean the glass two or three times with a non-abrasive household cleaner and warm water. We recommend gas fireplace glass cleaner. After that, clean the glass two or three times during each heating season or more often if necessary.

Wiring

If any of the original wire supplied with this unit must be replaced, use no. 18, 150°C wire or its equivalent.

General Glass Information

⚠ WARNING

Do not operate appliance with the glass front removed, cracked or broken.

Only glass approved for use by the manufacturer in fireplace may be used for replacement. The glass replacement should be done by a licensed or qualified service person.

⚠ WARNING

1. **The use of substitute glass will void all product warranties.**
2. **Avoid breaking the glass.**
3. **Do not operate this appliance without the glass front or with a broken glass front. Have a qualified service person replace damaged glass and gasket using materials specified by Empire Comfort Systems.**
4. **Do not abuse or strike the glass.**

⚠ WARNING

Do not use Ammonia based or abrasive cleaners on glass.
Do not attempt to clean glass when glass is hot.

Glass & Barrier Removal

1. Remove the lower panel.
2. Lift off and remove the barrier screen.
3. Release two glass frame clamps at bottom of firebox.
4. Remove glass frame.

Glass & Barrier Replacement

1. Place the glass frame into fireplace.
2. Attach two glass frame clamps at bottom of firebox.
3. Replace the barrier screen.
4. Attach lower panel.

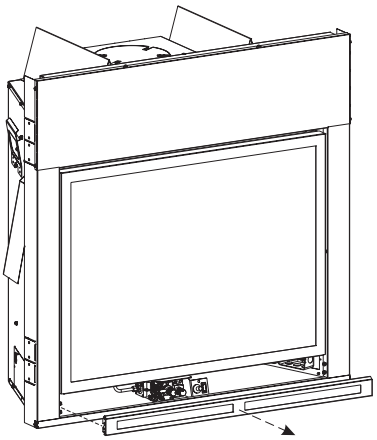

Figure 76

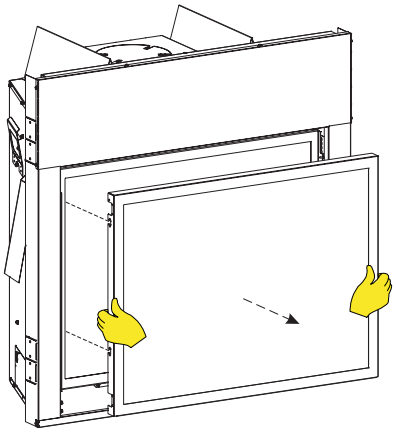

Figure 77

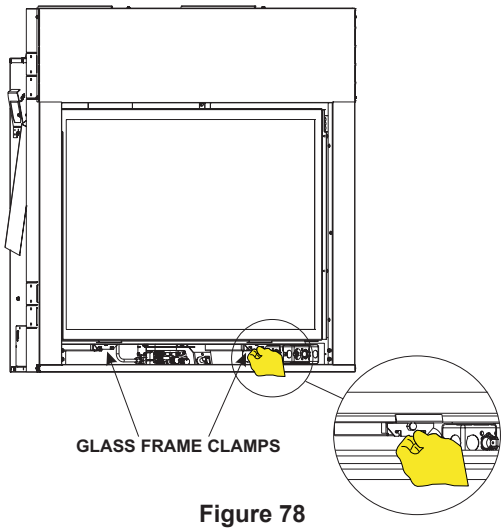

Figure 78

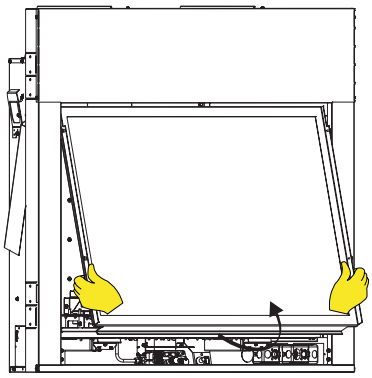

Figure 79

CONTROL SYSTEM TROUBLESHOOTING

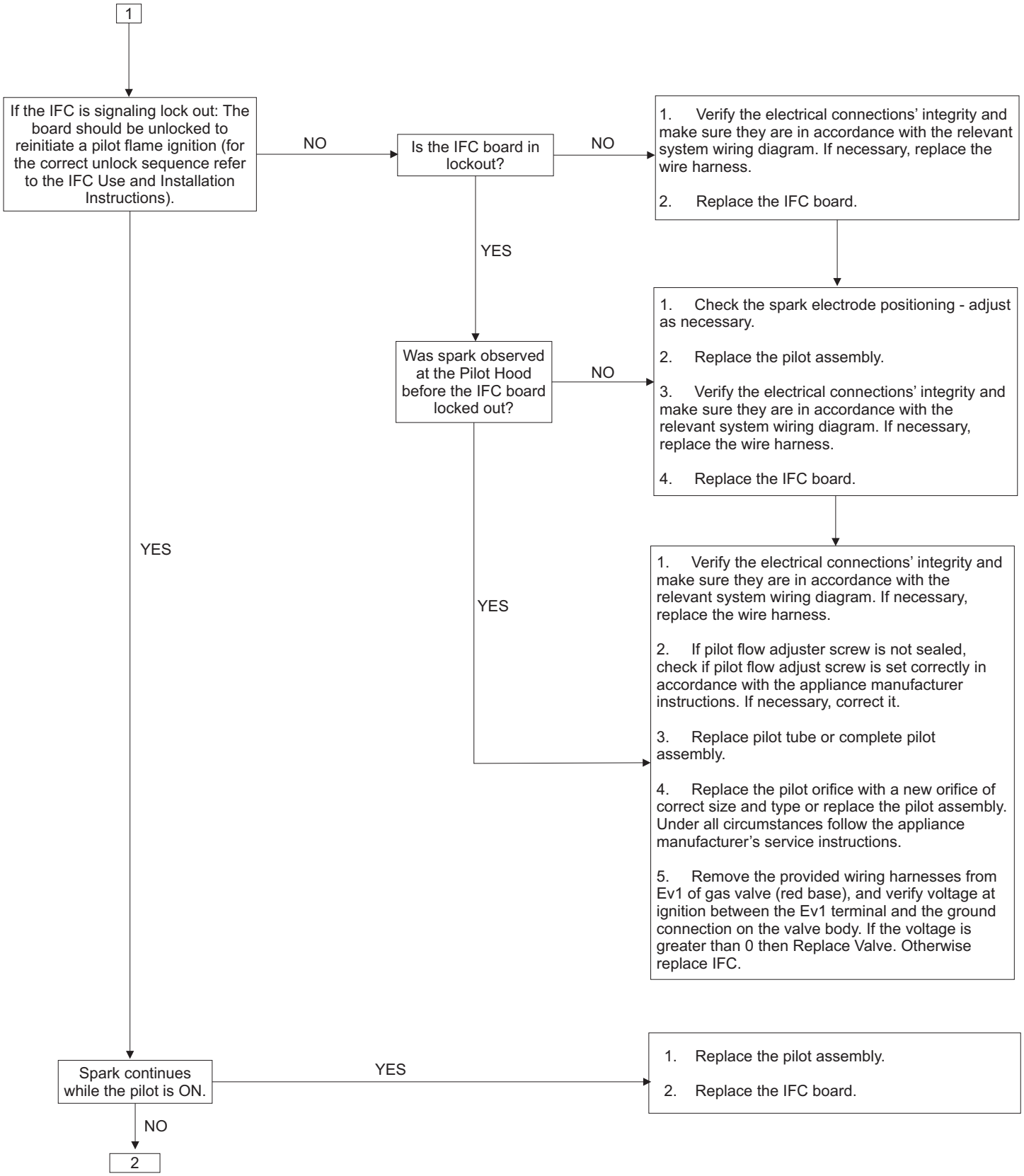

2

Main burner lights when the pilot only should light.

YES →

1. Replace IFC board.
2. Replace the gas valve.

NO ↓

Pilot holds the flame?

NO →

1. Verify the pilot flame fully engulfs the tip of the sense electrode. If not, replace the pilot assembly.
2. Replace the pilot assembly.
3. Carefully clean the electrical connections of the sense cable and the IFC board sense cable connection.
4. Replace the sense cable, the cable-sense electrode assembly, or the pilot assembly.
5. Verify the pilot is properly grounded.
6. Replace the pilot orifice with a new orifice of correct size and type or replace the pilot assembly.
7. If pilot flow adjuster screw is not sealed, correct it.

YES ↓

Main burner ignites?

NO →

1. Verify the electrical connections' integrity and make sure they are in accordance with the relevant system wiring diagram. If necessary, replace the wire harness.
2. Check if the optional remote transmitter is in "thermostat" or "on" mode and verify there is a call for heat (if using a thermostat remote). Adjust the setting for heat.
3. Verify that the pilot hood is properly fitted and a pilot flame is directed to properly ignite the main appliance burner.
4. Replace the main burner orifice with a new orifice of correct size and type or replace the pilot assembly. Under all circumstances, follow the service instructions.
5. Remove the provided wiring harnesses from EV2 of gas valve (red base) and verify voltage at ignition between the EV1 terminal and the ground connection on the valve body.
   5.1 If the voltage is greater than 0, then replace valve.
   5.2 Or Replace IFC.
6. Check the pressure at the outlet pressure test point out according to the manufacturer's instruction. If not in accordance, replace the gas valve.

YES ↓

Main burner remains ON?

NO →

1. Verify the electrical connections' integrity and make sure they are in accordance with the relevant system wiring diagram. If necessary, replace the wire harness.
2. Check the pressure at the outlet pressure test point out according the manufacturer's instruction. If not in accordance, replace the gas valve.
3. With the system in the OFF position, connect the voltmeter between the EV2 terminal (green base) on the valve and the ground on the valve body.
   Turn the system ON, let pilot light, and observe the following voltage sequence: once the pilot flame is proved, the voltage on EV2 should spike to approx. 5 VdC for approx. 2 sec and then drop to approx. 0.6 VdC continuously.
   3.1 If the sequence is followed, replace the gas valve.
   3.2 If the sequence is not followed, replace the IFC board.

↓

Main burner modulates properly?

→

1. Replace the main burner orifice with a new orifice of correct size (partial blockage possible). Verify that the main burner flame modulates. If it does not modulate, replace the gas valve.
2. Verify that the gas valve outlet pressure limits are in accordance with the manufacturer specifications. If not, replace the gas valve.

IMPORTANT SAFETY INFORMATION

Definitions:

⚠ **DANGER: Indicates a hazardous situation which, if not avoided, will result in death or serious injury.**

⚠ **WARNING: Indicates a hazardous situation which, if not avoided, could result in death or serious injury.**

⚠ **CAUTION: Indicates a hazardous situation which, if not avoided, could result in minor or moderate injury.**

NOTICE: Addresses practices not related to personal injury.

⚠ WARNING

Read and follow these safety precautions prior to operating this appliance. Failure to follow these precautions may result in death, injury, or property damage.

SAFETY PRECAUTIONS

Before enclosing the vent pipe assembly, operate the appliance to ensure it vents properly.

⚠ WARNING

Do not operate this appliance without the glass front panel installed. Improper use of the appliance will cause noxious fumes to enter the building.

⚠ CAUTION

If the glass is cracked or damaged in any way, it should be replaced only with a complete glass frame assembly from Empire. See parts list on Pages 54 - 55 for ordering.

- Due to high temperatures, the appliance should be located out of traffic and away from furniture and draperies.
- If this appliance is installed directly on carpeting, tile or other combustible material other than wood flooring the appliance must be installed on a metal or wood panel extending the full width and depth of the appliance.
  The base referred to above does not mean the fireproof base as used on wood stoves. The protection is for rugs that are extremely thick and light colored tile.
- Alert people – and especially children – to the hazards of high surface temperatures. This heater may become hot enough to burn skin and ignite clothing after prolonged contact. To prevent injury, caution people to stay clear and avoid touching the heater.
- Young children should be carefully supervised when they are in the same room as the appliance.
- Always keep the appliance area clear and free from combustible material, gasoline and other flammable vapors and liquids.
- This appliance must not share or be connected to a flue serving a separate solid-fuel burning appliance.
- The vent cap, located on the outside of your home, will become very hot. Alert everyone, adults and children, to stay clear and avoid touching the vent cap. Keep the area around the vent cap clear of combustibles, including shrubs and trees.
- Under no circumstances should any solid fuels (wood, coal, paper or cardboard etc.) be used in this appliance.
- This appliance requires an unimpeded flow of air to circulate warm air. Do not place objects on or around the appliance that may restrict air flow to or from the appliance.
- Due to high temperatures, the appliance should be located out of traffic and away from furniture and draperies.
- Keep the area around the heater free of combustible materials – including drapery, upholstered furniture, paper, boxes, and clothing.
- The glass front or any part removed for servicing the appliance must be replaced prior to operating the appliance. Work should be done by a qualified service person.
- Any safety screen or guard removed to service an appliance must be replaced prior to operating the appliance.
- Young children should be carefully supervised when they are in the same room as the appliance. Toddlers, young children, and others may be susceptible to accidental contact burns. A physical barrier is recommended if there are at-risk individuals in the house. To restrict access to a fireplace or stove, install an adjustable safety gate to keep toddlers young children, and other at-risk individuals out of the room and away from hot surfaces.
- A barrier designed to reduce the risk of burns from the hot viewing glass is provided with this appliance and shall be installed for the protection of children and other at-risk individuals.
- If the barrier becomes damaged, the barrier shall be replaced with the manufacturer's barrier for this appliance.
- Any safety screen, guard, or barrier removed for servicing an appliance must be replaced prior to operating the appliance.

MAINTENANCE PRECAUTIONS

- Installation and repair should be done by a qualified service person. The appliance should be inspected before use and at least annually by a qualified service person. More frequent cleaning may be required due to excessive lint from carpeting, bedding material, etc. It is imperative that control compartments, burners and circulating air passageways of the appliance be kept clean.
- Keep burner and control compartment clean.
- Examine venting system periodically and replace damaged parts.
- Make a periodic visual check of pilot and burners. Clean and replace damaged parts.

DAMAGED HEATER

- Do not use this appliance if any part has been under water. Immediately call a qualified service technician to inspect the appliance and to replace any part of the control system and any gas control which has been under water.
- In the event of a natural disaster (tornado, earthquake, fire, etc.) have a qualified technician inspect the heater for damage or potential gas leaks. Repair or replace any damaged components before operating this heater.

SAFETY INFORMATION FOR USERS OF LP GAS

Propane (LP-Gas) is a flammable gas which can cause fires and explosions. In its natural state, propane is odorless and colorless. You may not know all the following safety precautions which can protect both you and your family from an accident. Read them carefully now, then review them point by point with the members of your household. Someday when there may not be a minute to lose, everyone's safety will depend on knowing exactly what to do. If, after reading the following information, you feel you still need more information, please contact your gas supplier.

LP-GAS WARNING ODOR

If a gas leak happens, you should be able to smell the gas because of the odorant put in the LP-Gas. That's your signal to go into immediate action!

- Do not operate electric switches, light matches, use your phone. Do not do anything that could ignite the gas.
- Get everyone out of the building, vehicle, trailer, or area. Do that IMMEDIATELY.
- Close all gas tank or cylinder supply valves.
- LP-Gas is heavier than air and may settle in low areas such as basements. When you have reason to suspect a gas leak, keep out of basements and other low areas. Stay out until firefighters declare them to be safe.
- Use your neighbor's phone and call a trained LP-Gas service person and the fire department. Even though you may not continue to smell gas, do not turn on the gas again. Do not re-enter the building, vehicle, trailer, or area.
- **Finally,** let the service man and firefighters check for escaped gas. Have them air out the area before you return. Properly trained LP-Gas service people should repair the leak, then check and relight the gas appliance for you.

NO ODOR DETECTED - ODOR FADE

Some people cannot smell well. Some people cannot smell the odor of the chemical put into the gas. You must find out if you can smell the odorant in propane. Smoking can decrease your ability to smell. Being around an odor for a time can affect your sensitivity or ability to detect that odor. Sometimes other odors in the area mask the gas odor. People may not smell the gas odor or their minds are on something else. Thinking about smelling a gas odor can make it easier to smell.

The odorant in LP-Gas is colorless, and it can fade under some circumstances. For example, if there is an underground leak, the movement of the gas through soil can filter the odorant. Odorants in LP-Gas also are subject to oxidation. This fading can occur if there is rust inside the storage tank or in iron gas pipes.

The odorant in escaped gas can adsorb or absorb onto or into walls, masonry and other materials and fabrics in a room. That will take some of the odorant out of the gas, reducing its odor intensity.

LP-Gas may stratify in a closed area, and the odor intensity could vary at different levels. Since it is heavier than air, there may be more odor at lower levels. Always be sensitive to the slightest gas odor. If you detect any odor, treat it as a serious leak. Immediately go into action as instructed earlier.

SOME POINTS TO REMEMBER

- **Learn to recognize the odor of LP-Gas.** Your local LP-Gas Dealer can give you a "Scratch and Sniff" pamphlet. Use it to find out what the propane odor smells like. If you suspect that your LP-Gas has a weak or abnormal odor, call your LP-Gas Dealer.
- If you are not qualified, do not light pilot lights, perform service, or make adjustments to appliances on the LP-Gas system. If you are qualified, consciously think about the odor of LP-Gas prior to and while lighting pilot lights or performing service or making adjustments.
- Sometimes a basement or a closed-up house has a musty smell that can cover up the LP-Gas odor. Do not try to light pilot lights, perform service, or make adjustments in an area where the conditions are such that you may not detect the odor if there has been a leak of LP-Gas.
- Odor fade, due to oxidation by rust or adsorption on walls of new cylinders and tanks, is possible. Therefore, people should be particularly alert and careful when new tanks or cylinders are placed in service. Odor fade can occur in new tanks, or reinstalled old tanks, if they are filled and allowed to set too long before refilling. Cylinders and tanks which have been out of service for a time may develop internal rust which will cause odor fade. If such conditions are suspected to exist, a periodic sniff test of the gas is advisable. **If you have any question about the gas odor, call your LP-Gas dealer. A periodic sniff test of the LP-Gas is a good safety measure under any condition.**
- If, at any time, you do not smell the LP-Gas odorant and you think you should, assume you have a leak. Then take the same immediate action recommended above for the occasion when you do detect the odorized LP-Gas.
- If you experience a complete "gas out," (the container is under no vapor pressure), turn the tank valve off immediately. If the container valve is left on, the container may draw in some air through openings such as pilot light orifices. If this occurs, some new internal rusting could occur. If the valve is left open, then treat the container as a new tank. Always be sure your container is under vapor pressure by turning it off at the container before it goes completely empty or having it refilled before it is completely empty.

REQUIREMENTS FOR MASSACHUSETTS

For all side wall horizontally vented gas fueled equipment installed in every dwelling, building or structure used in whole or in part for residential purposes, including those owned or operated by the Commonwealth and where the side wall exhaust vent termination is less than seven feet above finished grade in the area of the venting, including but not limited to decks and porches, the following requirements shall be satisfied:

1. INSTALLATION OF CARBON MONOXIDE DETECTORS. At the time of installation of the side wall horizontal vented gas fueled equipment, the installing plumber or gas fitter shall observe that a hard wired carbon monoxide detector with an alarm and battery back-up is installed on the floor level where the gas equipment is to be installed. In addition, the installing plumber or gas fitter shall observe that a battery operated or hard wired carbon monoxide detector with an alarm is installed on each additional level of the dwelling, building or structure served by the side wall horizontal vented gas fueled equipment. It shall be the responsibility of the property owner to secure the services of qualified licensed professionals for the installation of hard wired carbon monoxide detectors
   a. In the event that the side wall horizontally vented gas fueled equipment is installed in a crawl space or an attic, the hard wired carbon monoxide detector with alarm and battery back-up may be installed on the next adjacent floor level.
   b. In the event that the requirements of this subdivision can not be met at the time of completion of installation, the owner shall have a period of thirty days to comply with the above requirements; provided, however, that during said thirty day period, a battery operated carbon monoxide detector with an alarm shall be installed.

2. APPROVED CARBON MONOXIDE DETECTORS. Each carbon monoxide detector as required in accordance with the above provisions shall comply with NFPA 720 and be ANSI/UL 2034 listed and IAS certified.

3. SIGNAGE. A metal or plastic identification plate shall be permanently mounted to the exterior of the building at a minimum height of eight feet above grade directly in line with the exhaust vent termination for the horizontally vented gas fueled heating appliance or equipment. The sign shall read, in print size no less than 1/2 inch in size, **"GAS VENT DIRECTLY BELOW. KEEP CLEAR OF ALL OBSTRUCTIONS".**

4. INSPECTION. The state or local gas inspector of the side wall horizontally vented gas fueled equipment shall not approve the installation unless, upon inspection, the inspector observes carbon monoxide detectors and signage installed in accordance with the provisions of 248 CMR 5.08(2)(a) 1 through 4.
   (b) EXEMPTIONS: The following equipment is exempt from 248 CMR 5.08(2)(a)1 through 4:
      1. The equipment listed in Chapter 10 entitled "Equipment Not Required To Be Vented" in the most current edition of NFPA 54 as adopted by the Board; and
      2. Product Approved side wall horizontally vented gas fueled equipment installed in a room or structure separate from the dwelling, building or structure used in whole or in part for residential purposes.
   (d) MANUFACTURER REQUIREMENTS - GAS EQUIPMENT VENTING SYSTEM NOT PROVIDED. When the manufacturer of a Product Approved side wall horizontally vented gas fueled equipment does not provide the parts for venting the flue gases, but identifies "special venting systems", the following requirements shall be satisfied by the manufacturer:
      1. The referenced "special venting system" instructions shall be included with the appliance or equipment installation instructions; and
      2. The "special venting systems" shall be Product Approved by the Board, and the instructions for that system shall include a parts list and detailed installation instruction.
   (e) A copy of all installation instructions for all Product Approved side wall horizontally vented gas fueled equipment, all venting instructions, all parts lists for venting instructions, and/or all venting design instructions shall remain with the appliance or equipment at the completion of the installation.

MASTER PARTS DISTRIBUTOR LIST

To Order Parts Under Warranty, please contact your local Empire dealer. See the dealer locator at www.empirecomfort.com. To provide warranty service, your dealer will need your name and address, purchase date and serial number, and the nature of the problem with the unit.

To Order Parts After the Warranty Period, please contact your dealer or one of the Master Parts Distributors listed below. This list changes from time to time. For the current list, please click on the Master Parts button at www.empirecomfort.com. Please note: Master Parts Distributors are independent businesses that stock the most commonly ordered Original Equipment repair parts for Heaters, Grills, and Fireplaces manufactured by Empire Comfort Systems Inc.

Dey Distributing
1401 Willow Lake Boulevard
Vadnais Heights, MN 55101

Phone: 651-490-9191
Toll Free: 800-397-1339
Website: www.deydistributing.com
Parts: Heater, Hearth and Grills

F. W. Webb Company
200 Locust Street
Hartford, CT 06114

Phone: 860-722-2433
Toll Free: 800-243-9360
Fax: 860-293-0479
Toll Free Fax: 800-274-2004
Websites: www.fwwebb.com & www.victormfg.com
Parts: Heater, Hearth and Grills

East Coast Energy Products
10 East Route 36
West Long Branch, NJ 07764

Phone: 732-870-8809
Toll Free: 800-755-8809
Fax: 732-870-8811
Website: www.eastcoastenergy.com
Parts: Heater, Hearth and Grills

HOW TO ORDER REPAIR PARTS

Parts Not Under Warranty

Parts can be ordered through your Service Person, Dealer, or a Master Parts Distributor. See this page for the Master Parts Distributors list. For best results, the **service person or dealer** should order parts through the distributor. Parts can be shipped directly to the **service person/dealer**.

Warranty Parts

Warranty parts will need a proof of purchase and can be ordered by your Service Person or Dealer. Proof of purchase is **required** for warranty parts.

All parts listed in the Parts List have a Part Number. When ordering parts, first obtain the Model Number and Serial Number from the name plate on your equipment. Then determine the Part Number (**not** the Index Number) and the Description of each part from the following illustration and part list. Be sure to give all this information . . .

Appliance Model Number _____ Part Description _____

Appliance Serial Number _____ Part Number _____

Type of Gas (Propane or Natural) _____

Do not order bolts, screws, washers or nuts. They are standard hardware items and can be purchased at any local hardware store.

Shipments contingent upon strikes, fires and all causes beyond our control.

WARRANTY

Empire Comfort Systems Inc. warranties this hearth product to be free from defects at the time of purchase and for the periods specified below. Hearth products must be installed by a qualified technician and must be maintained and operated safely, in accordance with the instructions in the owner's manual. This warranty applies to the original purchaser only and is not transferable. All warranty repairs must be accomplished by a qualified gas appliance technician.

Limited Lifetime Parts Warranty – Combustion Chamber, Heat Exchanger, and Factory-Installed Glass

If the combustion chamber, heat exchanger (see parts list) or factory-installed glass fails because of defective workmanship or material, Empire will repair or replace at Empire's option.

Limited Three-Year Parts Warranty – All Other Components
(Except Remote Controls, Thermostats, Accessories and Replacement Parts)

Should any part fail because of defective workmanship or material within three years from the date of purchase, Empire will repair or replace at Empire's option..

Limited One-Year Parts Warranty – Remote Controls, Thermostats, Accessories, and Parts

Should any remote control, thermostat, accessory, or other part fail because of defective workmanship within one year from the date of purchase, Empire will repair or replace at Empire's option.

Duties of the Owner

The appliance must be installed by a qualified installer and operated in accordance with the instructions furnished with the appliance. A bill of sale, cancelled check, or payment record should be kept to verify purchase date and establish warranty period. Ready access to the appliance for service.

What Is Not Covered

Damages that might result from the use, misuse, or improper installation of this appliance.
Travel, diagnostic costs and freight charges on warranted parts to and from the factory.
Claims that do not involve defective workmanship or materials.
Unauthorized service or parts replacements.
Removal and reinstallation cost.
Inoperable due to improper or lack of maintenance.

How To Get Service

To make a claim under this warranty, please have your receipt available and contact your installing dealer. Provide the dealer with the model number, serial number, type of gas, and purchase verification. The installing dealer is responsible for providing service and will contact the factory to initiate any warranted parts replacements. Empire will make replacement parts available at the factory. Shipping expenses are not covered.
If, after contacting your Empire dealer, service received has not been satisfactory, contact: Consumer Relations Department, Empire Comfort Systems Inc., PO Box 529, Belleville, Illinois 62222, or send an e-mail to info@empirecomfort.com with "Consumer Relations" in the subject line.

Your Rights Under State Law

This warranty gives you specific legal rights, and you may also have other rights, which vary from state to state.

EMPIRE
COMFORT SYSTEMS
SINCE 1932

Empire Comfort Systems Inc.
Belleville, IL

If you have a general question about our products, please e-mail us at info@empirecomfort.com.

If you have a service or repair question, please contact your dealer.

www.empirecomfort.com