This Owner's Manual is provided and hosted by Appliance Factory Parts.

Appliance Factory Parts
Experts in BBQ, Humidifier, & Appliance Parts
1-800-955-7075

American Hearth VFIL18 Owner's Manual

Shop genuine replacement parts for American Hearth VFIL18

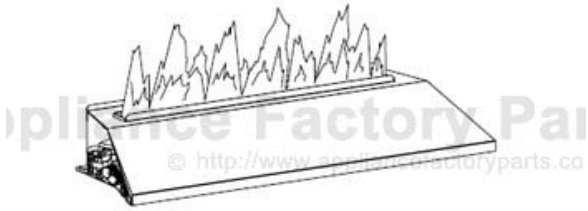

Find Your American Hearth Fireplace Parts - Select From 88 Models

-------- Manual continues below --------

EMPIRE
COMFORT SYSTEMS
SINCE 1932

INSTALLATION INSTRUCTIONS AND OWNER'S MANUAL

Vented/Vent - Free Loft Burner

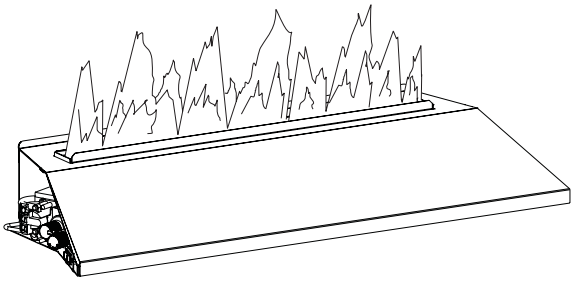

INSTALLER:
Leave this manual with the appliance.

CONSUMER:
Retain this manual for future reference.

⚠ WARNING

FIRE OR EXPLOSION HAZARD
Failure to follow safety warnings exactly could result in serious injury, death or property damage.

— Do not store or use gasoline or other flammable vapors and liquids in the vicinity of this or any other appliance.

— WHAT TO DO IF YOU SMELL GAS
- Do not try to light any appliance.
- Do not touch any electrical switch; do not use any phone in your building.
- Leave the building immediately.
- Immediately call your gas supplier from a neighbor's phone. Follow the gas supplier's instructions.
- If you cannot reach your gas supplier, call the fire department.

— Installation and service must be performed by a qualified installer, service agency or the gas supplier.

⚠ WARNING

If not installed, operated and maintained in accordance with the manufacturer's instructions, this product could expose you to substances in fuel or from fuel combustion which can cause death or serious illness.

UNVENTED GAS HEATER MODELS

VFRL1810(N,P)-1
VFRL(18,24,30)(N,P)-1
VFIL(18,24,30)(N,P)-1

VENTED DECORATIVE APPLIANCE MODELS

VFRL1810(N,P)-1
VFRL(18,24,30)(N,P)-1

GAS-FIRED
C UL US
LISTED

This is an unvented gas-fired heater. It uses air (oxygen) from the room in which it is installed. Provisions for adequate combustion and ventilation air must be provided. Refer to page 11.

WATERVAPOR:ABY-PRODUCTOFUNVENTED ROOM HEATERS
Water vapor is a by-product of gas combustion. An unvented room heater produces approximately one (1) ounce (30ml) of water for every 1,000 BTU's (.3KW's) of gas input per hour. Refer to page 8.

This appliance may be installed in an aftermarket permanently located, manufactured (mobile) home, where not prohibited by local codes.

This appliance is only for use with the type of gas indicated on the rating plate. This appliance is not convertible for use with other gases.

NATIONAL FIREPLACE INSTITUTE
NFI
CERTIFIED
www.nficertified.org

We suggest that our gas hearth products be installed and serviced by professionals who are certified in the U.S. by the National Fireplace Institute® (NFI) as NFI Gas Specialists.

TABLE OF CONTENTS

SECTION	PAGE
Quick Start Guide	3
Important Safety Information	5
Safety Information for Users of LP-Gas	6
Introduction	7
Product Specifications	8
Water Vapor: A By-Product of Unvented Room Heaters	8
General Information	9
Requirements for Canada	10
Provisions for Adequate Combustion & Ventilation Air	11
Clearances	12 - 13
Combustible Material	13
Fireplace Preparation	14
Installing as a Vented Appliance	14
Before Fully Installing the Appliance	15 - 16
Gas Supply	17
Operation Instructions/Flame Appearance	18
Wiring - VFRL Models	19
VFRL(18,24,30) Lighting Instructions	20
VFRL1810(N,P) Lighting Instructions	21
VFIL Series Operating Instructions	22
VFIL Series Remote Electronic Ignition and Control System	23 - 26
VFIL(18,24,30) Lighting Instructions	27
VFIL(18,24,30) Wiring Diagram	28
Pilot Flame Characteristics	29 - 30
Cleaning and Servicing	30
Troubleshooting: Symptoms, Possible Causes and Corrections	31
Decorative Top Cover Accessory Installation	32 - 33
VFIL Parts List	34
VFIL Parts View	35
VFRL Parts List	36
VFRL Parts View	37
Master Parts Distributor List	38
How To Order Repair Parts	38
Warranty	39

Quick Start Guide - Intermittent Pilot Systems

To START the Fireplace:

If the pilot is NOT lit:

1. At the same time, press the “OFF” and high flame buttons and release once there is an audible “beep” sound.
2. The pilot will ignite on the sixth beep. You may hear a clicking sound around the same time as that beep, this is normal.
3. There will be a total of 14 beeps. The main burner will ignite approximately 15 seconds after the pilot.

If the pilot IS lit.

1. To ignite the burner, press the high flame button (there will be a beep) for approximately 5 seconds until there is a soft click, then release the button.

To ADJUST the Flame Height

1. Double-click the small flame button. “LO” will be displayed.
2. Double-click the large flame button. Flame automatically goes to high fire. “HI” will be displayed.

To SHUT OFF the Fireplace

1. To completely shut off the burner and ignitor, press and hold the “OFF” button until the unit “beeps.” The flames will go on the burner out once any lingering gas is used up.
2. To shut off the burner but keep the ignitor on, push the low flame button (bottom right) for 10 seconds and then release.

FOR MORE INFORMATION, SEE OPERATION INSTRUCTIONS.

VFIL Remote Quick Start Instructions: Cut out this page and keep it near your remote.

THIS PAGE INTENTIONALLY LEFT BLANK

IMPORTANT SAFETY INFORMATION

⚠ **DANGER**: Indicates a hazardous situation which, if not avoided, will result in death or serious injury.

⚠ **WARNING**: Indicates a hazardous situation which, if not avoided, could result in death or serious injury.

⚠ **CAUTION**: Indicates a hazardous situation which, if not avoided, could result in minor or moderate injury.

NOTICE: Addresses practices not related to personal injury.

- **An unvented room heater having an input rating of more than 6,000 Btu per hour shall not be installed in a bathroom**
- **An unvented room heater having an input rating of more than 10,000 Btu per hour shall not be installed in a bedroom or bathroom.**
- **Due to high temperatures, the appliance should be located out of traffic and away from furniture and draperies.**
- **Children and adults should be alerted to the hazard of high surface temperature and should stay away to avoid burns or clothing ignition.**
- **Young children should be carefully supervised when they are in the same room with the appliance.**
- **Do not place clothing or other flammable material on or near the appliance.**
- **Avoid the use of scented air fresheners (plug in type air fresheners, etc.) while the burner is in operation. Air fresheners produce a residue in the air similar to candles.**
- **Avoid the use of scented or decorative candles while the burner is in operation. Candles produce a residue in the air that creates a soot like substance. Burning candles while the log set is operating magnifies the problem. It should be noted that candles, in general, produce soot. The amount of time burned and the quantity of candles burned will determine the amount of soot produced and deposited.**
- **Installation and repair should be done by a QUALIFIED SERVICE PERSON. This appliance should be inspected before use and at least annually by a professional service person. More frequent cleaning may be required due to excessive lint from carpeting, bedding materials, etc. It is imperative that control compartments, burners and circulating air passageways of the appliance be kept clean.**
- **DO NOT use this room heater if any part has been under water. Immediately call a qualified service technician to inspect the room heater and to replace any part of the control system and any gas control which has been under water.**
- **You must operate heater with fireplace screen in place.**
- **Do not place trash, logs or other articles on the log set during operation.**
- **During manufacturing, fabricating and shipping, various components of this appliance are treated with certain oils, films or bonding agents. These bonding agents are not harmful but may produce annoying smoke and smells as they are burned off during initial operation of the appliance. This is a normal temporary occurrence. A window should be opened during the initial bake out period.**
- **Correct installation of the ceramic fiber logs, proper location of the heater and annual cleaning are necessary to avoid potential problems with sooting. Sooting, resulting from improper installation or operation, can settle on surfaces outside the fireplace. See instructions for proper installation.**
- ⚠ **WARNING: Do not allow fans to blow directly into the fireplace. Avoid any drafts that alter burner flame patterns.**
- ⚠ **WARNING: Do not use a blower insert, heat exchanger insert or other accessory not approved for use with this heater.**
- ⚠ **WARNING! This fireplace needs fresh air for ventilation to run properly. This fireplace has an ODS (oxygen depletion sensor) which will shut down the heater if adequate fresh air is not available. See troubleshooting section in the instructions.**
- ⚠ **WARNING: DO NOT operate this appliance unless all components including logs, burners, and controls are in good working condition. Never operate this appliance if any log or twig is broken, or out of their intended position. Refer to the Log set placement instructions for correct log and twig positioning.**
  Replacement components are available through your local dealer as indicated in the How to Order Repair Parts section of the appliance manual.
- **Keep appliance area clear and free from combustible materials, gasoline and other flammable vapors and liquids.**
- ⚠ **WARNING: Failure to keep the primary air opening(s) of the burner(s) clean may result in sooting and property damage.**

⚠ WARNING

When used without adequate combustion and ventilation air, heater may give off CARBON MONOXIDE, an odorless, poisonous gas.

Do not install heater until all necessary provisions are made for combustion and ventilation air. Consult the written instructions provided with the heater for information concerning combustion and ventilation air. In the absence of instructions, refer to the National Fuel Gas Code, ANSI Z223.1/NFPA 54, Air for Combustion and Ventilation, or applicable local codes.

This heater is equipped with a PILOT LIGHT SAFETY SYSTEM designed to turn off the heater if not enough fresh air is available.

DO NOT TAMPER WITH PILOT LIGHT SAFETY SYSTEM!

If heater shuts off, do not relight until you provide fresh air.

If heater keeps shutting off, have it serviced. Keep burner and control compartment clean.

CARBON MONOXIDE POISONING MAY LEAD TO DEATH.

Early signs of carbon monoxide poisoning resemble the flu, with headache, dizziness and/or nausea. If you have these signs, heater may not be working properly. Get fresh air at once! Have heater serviced.

Some people — pregnant women, persons with heart or lung disease, anemia, those under the influence of alcohol , those at high altitudes — are more affected by carbon monoxide than others.

The pilot light safety system senses the depletion of oxygen at its location. If this heater is installed in a structure having a high vertical dimension, the possibility exists that the oxygen supply at the higher levels will be less than that at the heater. In this type of application, a fan to circulate the structure air will minimize this effect. The use of this fan will also improve the comfort level in the structure. When a fan is used to circulate air, it should be located so that the air flow is not directed at the burner.

SAFETY INFORMATION FOR USERS OF LP-GAS

Propane (LP-Gas) is a flammable gas which can cause fires and explosions. In its natural state, propane is odorless and colorless. You may not know all the following safety precautions which can protect both you and your family from an accident. Read them carefully now, then review them point by point with the members of your household. Someday when there may not be a minute to lose, everyone's safety will depend on knowing exactly what to do. If, after reading the following information, you feel you still need more information, please contact your gas supplier.

LP-GAS WARNING ODOR

If a gas leak happens, you should be able to smell the gas because of the odorant put in the LP-Gas. That's your signal to go into immediate action!

- Do not operate electric switches, light matches, use your phone. Do not do anything that could ignite the gas.
- Get everyone out of the building, vehicle, trailer, or area. Do that IMMEDIATELY.
- Close all gas tank or cylinder supply valves.
- LP-Gas is heavier than air and may settle in low areas such as basements. When you have reason to suspect a gas leak, keep out of basements and other low areas. Stay out until firefighters declare them to be safe.
- Use your neighbor's phone and call a trained LP-Gas service person and the fire department. Even though you may not continue to smell gas, do not turn on the gas again. Do not re-enter the building, vehicle, trailer, or area.
- **Finally**, let the service man and firefighters check for escaped gas. Have them air out the area before you return. Properly trained LP-Gas service people should repair the leak, then check and relight the gas appliance for you.

NO ODOR DETECTED - ODOR FADE

Some people cannot smell well. Some people cannot smell the odor of the chemical put into the gas. You must find out if you can smell the odorant in propane. Smoking can decrease your ability to smell. Being around an odor for a time can affect your sensitivity or ability to detect that odor. Sometimes other odors in the area mask the gas odor. People may not smell the gas odor or their minds are on something else. Thinking about smelling a gas odor can make it easier to smell.

The odorant in LP-gas is colorless, and it can fade under some circumstances. For example, if there is an underground leak, the movement of the gas through soil can filter the odorant. Odorants in LP-Gas also are subject to oxidation. This fading can occur if there is rust inside the storage tank or in iron gas pipes.

The odorant in escaped gas can adsorb or absorb onto or into walls, masonry and other materials and fabrics in a room. That will take some of the odorant out of the gas, reducing its odor intensity.

LP-Gas may stratify in a closed area, and the odor intensity could vary at different levels. Since it is heavier than air, there may be more odor at lower levels. Always be sensitive to the slightest gas odor. If you detect any odor, treat it as a serious leak. Immediately go into action as instructed earlier.

SOME POINTS TO REMEMBER

- **Learn to recognize the odor of LP-gas.** Your local LP-Gas Dealer can give you a "Scratch and Sniff" pamphlet. Use it to find out what the propane odor smells like. If you suspect that your LP-Gas has a weak or abnormal odor, call your LP-Gas Dealer.
- If you are not qualified, do not light pilot lights, perform service, or make adjustments to appliances on the LP-Gas system. If you are qualified, consciously think about the odor of LP-Gas prior to and while lighting pilot lights or performing service or making adjustments.
- Sometimes a basement or a closed-up house has a musty smell that can cover up the LP-Gas odor. Do not try to light pilot lights, perform service, or make adjustments in an area where the conditions are such that you may not detect the odor if there has been a leak of LP-Gas.
- Odor fade, due to oxidation by rust or adsorption on walls of new cylinders and tanks, is possible. Therefore, people should be particularly alert and careful when new tanks or cylinders are placed in service. Odor fade can occur in new tanks, or reinstalled old tanks, if they are filled and allowed to set too long before refilling. Cylinders and tanks which have been out of service for a time may develop internal rust which will cause odor fade. If such conditions are suspected to exist, a periodic sniff test of the gas is advisable. **If you have any question about the gas odor, call your LP-gas dealer. A periodic sniff test of the LP-gas is a good safety measure under any condition.**
- If, at any time, you do not smell the LP-Gas odorant and you think you should, assume you have a leak. Then take the same immediate action recommended above for the occasion when you do detect the odorized LP-Gas.
- If you experience a complete "gas out," (the container is under no vapor pressure), turn the tank valve off immediately. If the container valve is left on, the container may draw in some air through openings such as pilot light orifices. If this occurs, some new internal rusting could occur. If the valve is left open, then treat the container as a new tank. Always be sure your container is under vapor pressure by turning it off at the container before it goes completely empty or having it refilled before it is completely empty.

INTRODUCTION

IMPORTANT: Read all instructions carefully before starting installation. Failure to follow these installation instructions may result in a possible fire hazard and will void the warranty.

Save this manual for future reference.
Please read this manual before installing and using the appliance.

Instructions to Installer

1. Installer must leave instruction manual with owner after installation.
2. Installer must have owner fill out and mail warranty card supplied with unvented room heater/vented decorative appliance.
3. Installer should show owner how to start and operate unvented room heater/vented decorative appliance.

Always consult your local Building Department regarding regulations, codes or ordinances which apply to the installation of an unvented room heater/vented decorative appliance.

This appliance may be installed in an aftermarket* manufactured (mobile) home, where not prohibited by state or local codes.

*Aftermarket: Completion of sale, not for purpose of resale, from the manufacturer.

Well Head Gas Installations
Some natural gas utilities use “well head” gas. This may affect the Btu output of the unit and promote sooting. Units shall not be converted to use well head gas.

This appliance is only for use with the type of gas indicated on the rating plate. This appliance is not convertible for use with other gases.

Solid-fuels shall not be burned in a fireplace where a vented decorative appliance is installed.

A vented decorative appliance must be installed only in a solid-fuel burning fireplace with a working flue and constructed of non-combustible material.

Any alteration of the original design, installed other than as shown in these instructions or use with a type of gas not shown on the rating plate is the responsibility of the person and company making the change.

Important
All correspondence should refer to complete Model Number, Serial Number and type of gas.

NOTICE: During initial firing of this unit, its paint will bake out, and smoke will occur. To prevent triggering of smoke alarms, ventilate the room in which the unit is installed.

⚠ WARNING

This appliance is for installation only in a solid-fuel burning masonry or UL 127 factory-built fireplace or in a listed ventless firebox enclosure. It has been design certified for these installations. Exception: DO NOT install this appliance in a factory-built fireplace that includes instructions stating it has not been tested or should not be used with unvented gas logs.

⚠ WARNING

Any modification to this unvented gas heater or its controls can be dangerous. Improper installation or use of the heater can cause serious injury or death from fire, burns, explosion or carbon monoxide poisoning.

OPTIONAL ACCESSORIES		
Accessory	**Description**	**Color**
ELH-1	Fireplace Hood for Vent-Free Logs	Black
ELH-2	Fireplace Hood for Vent-Free Logs	Brass
OPTIONAL ACCESSORIES for VFRL ONLY		
FRBC	Battery Operated Remote Control	
FRBTC	Battery Operated Remote Control with Thermostat	
FRBTP	Battery Operated Programmable Remote Control	
FREC	Electric Remote Control	
FWS-1	Wall Switch	
TRW	Remote Wall Thermostat (Wireless)	
TMV	Wall Thermostat, Millivolt - Reed Switch	

NOTICE: Thermostats are for Vent-Free Applications only.

OPTIONAL DECORATIVE ACCESSORIES

Part Number	Decorative Glass Description	Number Of Kits Recommended For Full Coverage	Model Used On
DG1BUC	Blue Clear	2	VF(R,I)L(18,1810)
DG1BKP	Black Polished	2	VF(R,I)L(18,1810)
DG1CLF	Clear Frosted	2	VF(R,I)L(18,1810)
DG1BUC	Blue Clear	3	VF(R,I)L24
DG1BKP	Black Polished	3	VF(R,I)L24
DG1CLF	Clear Frosted	3	VF(R,I)L24
DG1BUC	Blue Clear	4 to 5	VF(R,I)L30
DG1BKP	Black Polished	4 to 5	VF(R,I)L30
DG1CLF	Clear Frosted	4 to 5	VF(R,I)L30

Part Number	Decorative Top Cover Description	Model Used On
DT18PB	Polished Black	VF(R,I)L(18,1810)
DT18SS	Brushed Stainless	VF(R,I)L(18,1810)
DT24PB	Polished Black	VF(R,I)L24
DT24SS	Brushed Stainless	VF(R,I)L24
DT30PB	Polished Black	VF(R,I)L30
DT30SS	Brushed Stainless	VF(R,I)L30

PRODUCT SPECIFICATIONS

Model	Gas	Valve Type	Regulator Pressure Setting	Gas Inlet Pressure Max	Gas Inlet Pressure Minimum
VFRL(18,24,30)	Natural	Millivolt	3.5" W.C.	10.5" W.C.	4.5" W.C.
	Propane		10.0" W.C.	13.0" W.C.	11.0" W.C.
VFRL1810	Natural	Millivolt	3.5" W.C.	10.5" W.C.	4.5" W.C.
	Propane		10.0" W.C.	13.0" W.C.	11.0" W.C.
VFIL18	Natural	Intermittent Pilot	4.0" W.C.	10.5" W.C.	4.5" W.C.
	Propane		10.0" W.C.	13.0" W.C.	11.0" W.C.
VFIL(24,30)	Natural	Intermittent Pilot	3.5" W.C.	10.5" W.C.	4.5" W.C.
	Propane		10.0 W.C.	13.0" W.C.	11.0" W.C.

Model	BTU/hr. Maximum Rate	BTU/hr. Medium Rate	BTU/hr. Minimum Rate	Air Shutter Opening
VFRL1810N	10,000	N/A	N/A	Closed
VFRL1810P	10,000	N/A	N/A	1/8"
VF(RL,IL)18N	26,000	N/A	19,000	Closed
VF(RL,IL)18P	26,000	N/A	20,500	1/4"
VF(RL,IL)24N	36,000	N/A	24,000	Closed
VF(RL,IL)24P	36,000	N/A	27,000	1/4"
VF(RL,IL)30N	40,000	N/A	28,000	Closed
VF(RL,IL)30P	40,000	N/A	30,000	1/4"

Note: Thermostats are for Vent-Free Applications only.

WATER VAPOR: A BY-PRODUCT OF UNVENTED ROOM HEATERS

Water vapor is a by-product of gas combustion. An unvented room heater produces approximately one ounce (30ml) of water for every 1,000 BTU's (.3KW's) of gas input per hour.

Unvented room heaters must be used as supplemental heat (a room) rather than a primary heat source (an entire house). In most supplemental heat applications, the water vapor does not create a problem. In most applications, the water vapor enhances the low humidity atmosphere experienced during cold weather.

The following steps will help insure that water vapor does not become a problem.

1. Be sure the heater is sized properly for the application, including ample combustion air and circulation air.
2. If high humidity is experienced, a dehumidifier may be used to help lower the water vapor content of the air.
3. Do not use an unvented room heater as the primary heat source (an entire house).

GENERAL INFORMATION

This is an unvented gas-fired heater. It uses air (oxygen) from the room in which it is installed. Provisions for adequate combustion and ventilation air must be provided.

Keep room area clear and free from combustible materials, gasoline and other flammable vapors and liquids.

Unvented gas heaters are a supplemental zone heater. They are not intended to be a primary heating appliance. Water vapor produced by an unvented heater can create moisture problems in a home when operated for extended periods of time.

During manufacturing, fabricating and shipping, various components of this appliance are treated with certain oils, films or bonding agents. These chemicals are not harmful but may produce annoying smoke and smells as they are burned off during the initial operation of the appliance; possibly causing headaches or eye or lung irritation. This is a normal and temporary occurrence.

The initial break-in operation should last 2-3 hours with the burner at the highest setting. Provide maximum ventilation by opening windows or doors to allow odors to dissipate. Any odors remaining after this initial break-in period will be slight and will disappear with continued use.

This appliance must not be used with glass doors in the closed position. This can lead to pilot outages and severe sooting outside the fireplace.

Do not use this room heater if any part has been under water. Immediately call a qualified service technician to inspect the room heater and replace any part of the control system and any gas control which has been under water.

WARNING: This appliance is equipped for (natural or propane) gas. Field conversion is not permitted.

Before you get started

Carefully inspect the contents for shipping damage. If any parts are missing or damaged, immediately inform the dealer from whom you purchased the appliance. Do not attempt to install any part of the appliance unless you have all parts in good condition.

Make sure you have received all parts:

Check your packing list to verify that all listed parts have been received. You should have the following:

- Gas burner assembly.
- Two masonry anchoring screws, two 10 x 1/2" black sheet metal anchoring screws and damper clamp.

The millivolt controlled heater may be operated with optional devices for REMOTE/OFF/ON functions.

a. Wall switch or thermostat with wire.

b. Hand held remote control with ON/OFF switch or thermostat.

Note: The VFIL series intermittent pilot heaters include a thermostatic remote control transmitter and receiver.

Handle the gas burner assembly by the sides only. Do not pick the unit up by the burner.

Qualified Installing Agency

Installation and replacement of gas piping, gas utilization equipment or accessories and repair and servicing of equipment shall be performed only by a qualified agency. The term "qualified agency" means any individual, firm, corporation, or company that either in person or through a representative is engaged in and is responsible for (a) the installation, testing, or replacement of gas piping or (b) the connection, installation, testing, repair, or servicing of equipment; that is experienced in such work; that is familiar with all precautions required, and that has complied with all the requirements of the authority having jurisdiction.

Commonwealth of Massachusetts: The installation must be made by a licensed plumber or gas fitter in the Commonwealth of Massachusetts.

Sellers of unvented propane or natural gas-fired supplemental room heaters shall provide to each purchaser a copy of 527 CMR-30 upon sale of the unit.

In the Commonwealth of Massachusetts, unvented propane and natural gas-fired space heaters shall be prohibited in bedrooms and bathrooms.

The installation must conform with local codes or, in the absence of local codes, with the *National Fuel Gas Code, ANSI Z223.1.**

**Available from the American National Standards Institute, Inc. 11 West 42nd St., New York, N.Y. 10018.*

High Altitude

When installing this unit at an elevation above 2,000 feet (in the United States), it may be necessary to decrease the input rating by changing the existing burner orifice to a smaller size. Generally, input should be reduced 4 percent for each 1,000 feet above sea level. However, if the heating value of the gas has been reduced, this general rule may not apply. Check with local gas utility for proper orifice size identification.

REQUIREMENTS FOR CANADA

This unit **cannot** be installed in a UNVENTED application, this unit **can only** be installed as a VENTED application with these requirements.

IMPORTANT SAFETY INFORMATION

This unit complies with ANSI Z21.60and CGA 2.26 Decorative Gas Appliances For Installation In Solid Fuel Burning Fireplaces. Do not burn wood or solid fuels in a fireplace where a decorative gas appliance is installed. This appliance is for installation only in a solid fuel burning fireplace, masonry fireplace or manufactured fireplace.

Warning: Any modification to this gas appliance or to controls can be dangerous. Improper installation or use of the gas appliance can cause serious injury or death from fire, burns, explosion or carbon monoxide poisoning.

1. Please follow all local codes regarding installation, combustion and ventilation air or in the absence of local codes follow the National Fuel Gas Code ANSI Z223.1(U.S. installation), or CAN/CGA-B149, Installation Code (Canada installation).
2. Proper installation and burner location is important to achieve optimum look and performance of your gas appliance. The optional accessories have been designed for easy location and placement on the burner base.
3. Do not operate this appliance with glass doors in the closed position. A fireplace screen must be in place when the appliance is burning. Adequate combustion air must be provided for proper venting. All flames should go up and out the top of the firebox into the flue vent. If any flames float or curl forward into the room do not operate appliance. Check for an open flue and adequate combustion air into the room. A damper clamp must be installed on the firebox damper to maintain an open flue vent condition. Refer to page 14 INSTALLING DAMPER CLAMP
4. Young children must be carefully supervised when they are in the same room as the gas appliance while in operation. Do not place stockings, clothing or any flammable material above or near the fireplace.
5. Do not substitute or use materials other than those specified for use with the appliance.
6. Also refer to IMPORTANT SAFETY INFORMATION on page 5 of this manual.

WARNING; DO NOT OPERATE THIS GAS APPLIANCE WITH GLASS DOORS CLOSED

- Clothing or other flammable material should not be placed on or near the appliance.
- Do not place trash or other articles on the appliance during operation.
- During manufacturing, fabricating and shipping, various components of this appliance are treated with certain oils, films or bonding agents. These bonding agents are not harmful but may produce annoying smoke and smells as they are burned off during initial operation of the appliance. This is a normal temporary occurrence. A window should be opened during the initial bake out period.
- Keep burner and control compartment clean.
- **WARNING:** Before installing in a solid fuel burning fireplace, the chimney flue and firebox must be cleaned of soot, creosote, ashes and loose paint by a qualified chimney cleaner.
- Installation and repair should be done by a qualified service person. The appliance should be inspected before use and at least annually by a qualified service person. More frequent cleaning may be required due to excessive lint from carpeting, bedding materials, etc. It is imperative that control compartments, burners and circulating air passageways of the appliance be kept clean.
- **Do not** put anything around the fireplace that will obstruct the flow of ventilation air.
- **Do** keep the appliance area clear and free from combustible material, gasoline and other flammable vapors and liquids.
- A yearly examination and cleaning of the venting system of the solid-fuel burning fireplace must be performed by a qualified agency.
- **Do** make a periodic visual check of pilot and burners. Clean and replace damaged parts.
- **Do not** use this appliance if any part has been under water. Immediately call a qualified service technician to inspect the appliance and to replace any part of the control system and any gas control which has been under water.
- Never burn solid fuels in fireplace where a gas appliance is installed.
- This unit complies with ANSI Z21.60 Decorative Vented Appliances for Solid Fuel Burning Fireplaces. State or local codes may only allow operation of this appliance in a vented configuration. Check your state or local codes.

PROVISIONS FOR ADEQUATE COMBUSTION & VENTILATION AIR

This heater shall not be installed in a confined space unless provisions are provided for adequate combustion and ventilation air.

A confined space is an area with volume less than 50 cubic feet per 1,000 Btuh of the combined input rates of all appliances drawing combustion air from that space. Small areas such as equipment rooms are confined spaces. Furnaces installed in a confined space which supply heated air to areas outside the space must draw return air from outside the space through tightly sealed return air ducts. A confined space must have 2 openings into the space for combustion air. One opening must be within 12 inches of the ceiling and the other must be within 12 inches of the floor. The required sizing of these openings is determined by whether inside or outside air is used to support combustion, the method by which the air is brought to the space (vertical or horizontal duct) and by the total input rate of all appliances in the space.

Unusually Tight Construction

The air that leaks around doors and windows may provide enough fresh air for combustion and ventilation. However, in buildings of unusually tight construction, you must provide additional fresh air.

Unusually tight construction is defined as construction where:

a. Walls and ceilings exposed to the outside atmosphere have a continuous water vapor retarder with a rating of one perm or less with openings gasketed or sealed, and
b. Weather-stripping has been added on openable windows and doors, and
c. Caulking or sealants are applied to areas such as joints around window and door frames, between sole plates and floors, between wall-ceiling joints, between wall panels, at penetrations for plumbing, electrical, and gas lines, and at other openings.

If your home meets all of the three criteria above, you must provide additional fresh air.

Warning: If the area in which the heater may be operated is smaller than that defined as an unconfined space or if the building is of unusually tight construction, provide adequate combustion and ventilation air by one of the methods described in the National Fuel Gas Code, ANSI Z223.1/NFPA 54, Air for Combustion and Ventilation, or applicable local codes.

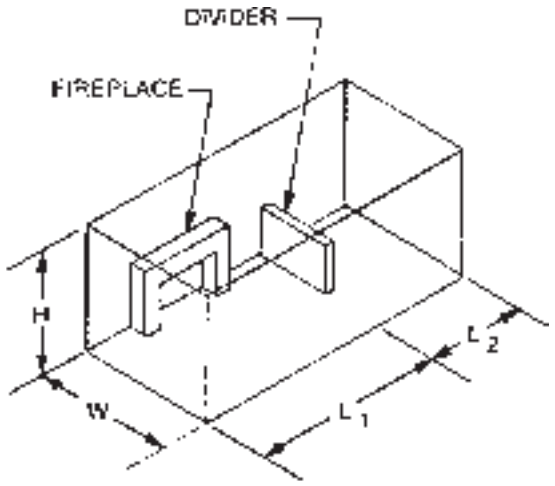

Example of Large Room with 1/2 Wall divider.

Figure 1

The following formula can be used to determine the maximum heater rating per the definition of unconfined space:

$$\text{Btu/Hr} = \frac{(L_1 + L_2)\text{FT} \times (W)\text{FT} \times (H)\text{FT}}{50} \times 1000$$

If the area in which the heater may be operated is smaller than that defined as an unconfined space, provide adequate combustion and ventilation air by one of the methods described in the *National Fuel Gas Code, ANSI Z223.1/NFPA54.*

Adhere to all codes, or in their absence, the latest edition of *THE NATIONAL FUEL GAS CODE ANSI Z223.1/NFPA54* which can be obtained from:

American National Standards Institute
11 West 42nd St.
New York, NY 10018
OR
National Fire Protection Association, Inc.
Batterymarch Park
Quincy, MA 02269

CLEARANCES

Minimum Dimensions For Solid Fuel Burning Fireplaces UL127 Factory Built Fireplaces (Figure 2)

Model	A	B	C	D
VF(R,I)L1810	21"	13"	28"	17"
VF(R,I)L18	21"	13"	28"	17"
VF(R,I)L24	27"	13"	34"	18"
VF(R,I)L30	33"	13"	40"	20"

The dimensions shown and defined in the fireplace manufacturer's instructions are minimum clearances to maintain in installing this gas appliance. Left and right clearances are determined when facing the front of the appliance.

Glass Doors

Make sure that glass doors are open during all operations of the Loft Burner. The opening of the glass door frame should be the dimension used for the minimum front opening of the firebox.

Follow these instructions to ensure safe installation.

Failure to follow instructions exactly can create a fire hazard.

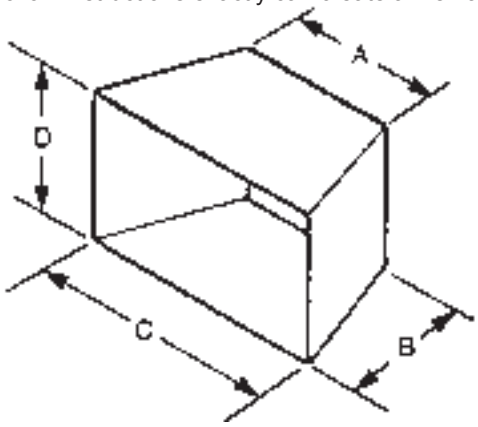

Figure 2

Sidewall & Ceiling Clearances (Figure 3)

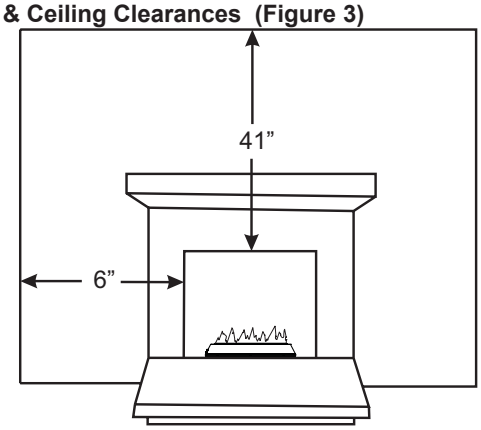

Figure 3

The sides of the fireplace opening must be 6" from any combustible wall. The ceiling must be at least 41" (for 18", 24" and 30" gas appliances) from the fireplace opening.

Mantel Clearances Without Hood

You must have non-combustible materials above the fireplace or firebox opening. Non-combustible material must extend at least 12" above fireplace or firebox opening. With sheet metal, you must have non-combustible material behind it.

Heat resistant materials such as slate and marble must be **at least 1/2" thick. Sheet metal should not be installed onto combustible material.**

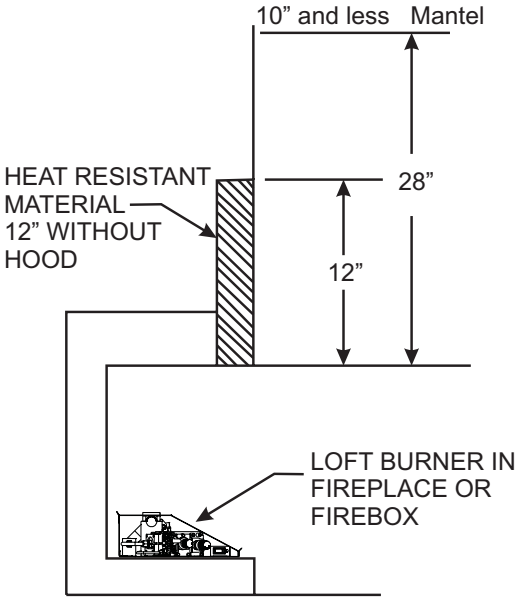

Figure 4

Note: If floor is sunken below the opening, the unit needs to be raised above the hearth level or the opening of the glass door surround.

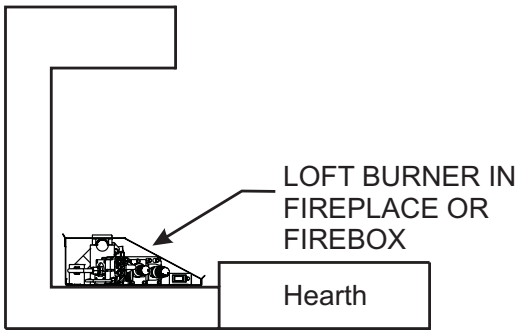

Figure 4a

If your installation does not meet the above clearances, you must proceed to one of the following steps:

- Use a hood.
- Operate the heater with flue damper open. See page 14 for **Installing as a Vented Appliance.**
- Raise the mantel to the proper height.
- Remove the mantel.

Non-Combustible Material Distance	Requirements for Safe Installation
12" or more	Non-combustible material
Less than 12"	Non-combustible material must be extended to at least 8" with the installation of the optional fireplace hood. If you cannot extend non-combustible material at least 8", you must operate heater with flue damper open.

CLEARANCES (continued)

Mantel Clearances with Hood (Figure 5)
You must have non-combustible materials above the fireplace opening. Non-combustible material must extend at least 8" above fireplace opening. With sheet metal, you must have non-combustible material behind it.

Heat resistant materials such as slate and marble must be at least 1/2" thick. Sheet metal should not be installed onto combustible material.

Example: A mantel may project from the wall a maximum of 2" at a minimum of 13 1/2" above the opening, and a maximum of 6" at a minimum of 15" above the opening.

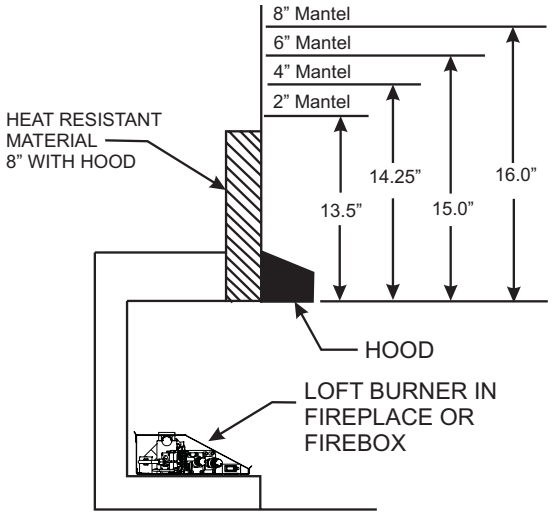

Figure 5

If your installation does not meet the above minimum clearances, you must proceed to one of the following steps:

- Operate the heater with the flue damper open. See page 14 for **Installing as a Vented Appliance.**
- Raise the mantel to the proper height.
- Remove the mantel.

Floor Clearance (Figure 6)
If installing heater at floor level, the minimum distance to combustibles is “0” inches.

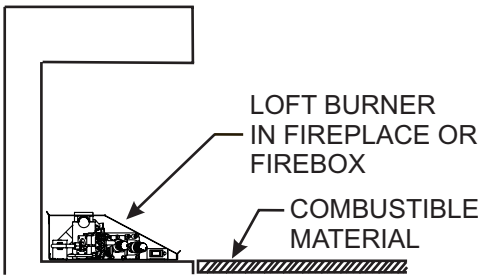

Figure 6

COMBUSTIBLE MATERIAL

Do not attach combustible material to the mantel of your fireplace. This is a fire hazard.

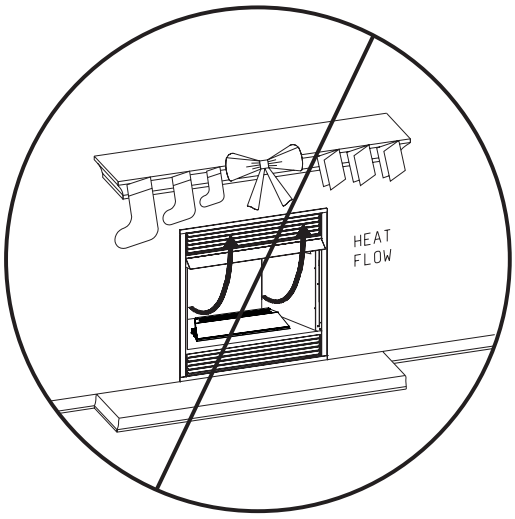

Figure 7

No greeting card, stockings or ornamentation of any type should be placed on or attached to the fireplace. This is a heating appliance. The flow of heat can ignite combustibles.

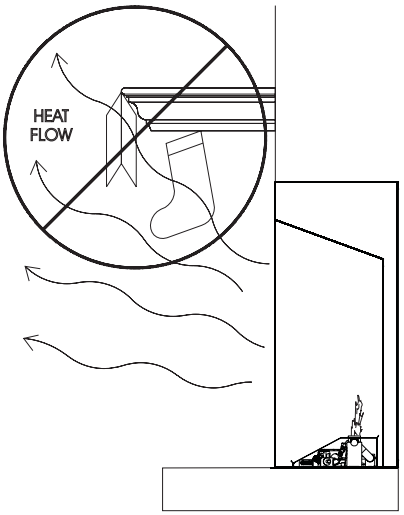

Figure 8

FIREPLACE PREPARATION

- Turn off gas supply to fireplace or firebox.
- Have the fireplace floor and chimney professionally cleaned to remove ashes, soot, creosote or other obstructions. Have this cleaning performed annually after installation.
- Seal any fresh air vents or ash clean-out doors located on floor or wall of fireplace. If not, drafting may cause pilot outage or sooting. Use a heat-resistant sealant. Do not seal chimney flue damper.

Install and operate the appliance as directed in this manual.

FOR FACTORY BUILT FIREPLACES
FREE OPENING AREA OF CHIMNEY DAMPER FOR VENTING COMBUSTION PRODUCTS FROM DECORATIVE APPLIANCES FOR INSTALLATION IN SOLID FUEL BURNING FIREPLACES

Chimney Height* (ft)	Appliance Input Rate (BTU/hr)		
	20	30	40
	Minimum Opening** (sq. in.)		
10	11.3	16.6	22.1
15	8.6	12.6	17.3
20	7.5	10.8	14.5
25	6.6	9.6	12.6
30	6.2	9.1	11.3
35	5.7	8.0	10.8
40	5.3	7.5	10.2

* Height is from hearth to top of chimney and the minimum height is 10 feet.

** Chart shows minimum opening (sq. in.) for given height and input rate.

FOR MASONRY BUILT FIREPLACES
FREE OPENING AREA OF CHIMNEY DAMPER FOR VENTING COMBUSTION PRODUCTS FROM DECORATIVE APPLIANCES FOR INSTALLATION IN SOLID FUEL BURNING FIREPLACES

Chimney Height* (ft)	Appliance Input Rate (BTU/hr)		
	20	30	40
	Minimum Opening** (sq. in.)		
6	17.6	25.7	33.8
8	16.5	23.7	31.2
10	15.1	21.7	28.7
15	14.1	19.9	26.1
20	12.9	18.5	23.7
30	12.2	16.9	21.6

* Height is from hearth to top of chimney and the minimum height is 6 feet.

** Chart shows minimum opening (sq. in.) for given height and input rate.

INSTALLING AS A VENTED APPLIANCE

Notice (Damper Clamp Installation)
When installing your gas appliance as a vented installation the damper clamp must be used.

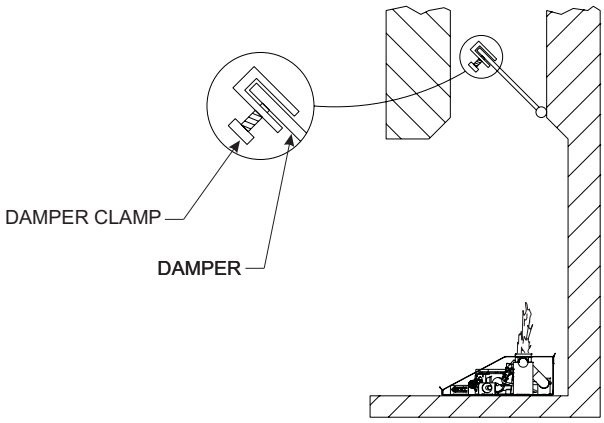

TYPICAL FIREPLACE
Figure 9

When installing your gas appliance as a vent-free installation the damper clamp can be used to eliminate the potential for odors when burning the logs for the first time.

Installing Damper Clamp (Figure 9)
Remove all ashes or other debris from the fireplace. If the fireplace is equipped with an ash dump be sure to seal the door with furnace cement or high temperature silicone. Be sure to check the damper for proper operation and verify that the flue passageway is open.

Place the clamp over the lip of the damper and tighten the hold down bolt until the clamp is securely attached to the damper. This will prevent the damper from accidentally closing.

The gas appliance may be installed as a vented decorative gas appliance in compliance with ANSI Z21.60 and National Fuel Gas Code. When the gas appliance is operated with the damper open, non-combustible material and minimum mantel requirements do not apply.

BEFORE FULLY INSTALLING THE APPLIANCE

- Turn off the gas supply to the fireplace or firebox.
- Seal any fresh air vents and/or ash clean-out doors located on the floor or wall of the fireplace. If left unsealed, drafting may cause pilot outage or sooting. Use a heat resistant sealant. Do not seal the chimney flue damper.

Before installing in a solid fuel burning fireplace, the chimney flue and firebox must be cleaned of soot, creosote, ashes and loose paint by a qualified chimney cleaner.

You must secure the gas appliance to the fireplace floor. If not, the entire unit may move when you adjust the controls. Movement of unit may cause shifting of the optional decorative glass. Burner movement could cause a gas leak.

Special care is required if you are installing the unit into a sunken fireplace. You must raise the fireplace floor to allow access to gas controls. This will insure adequate air flow and guard against sooting. Raise the fireplace floor using noncombustible materials.

Installation of Burner Support Legs

Four Burner Support Legs are included with the Loft Burner. Installation is optional if you have a VFRL (millivolt series burner.

- If a Remote Control option is to be used with the VFRL (millivolt) series burner without the Support Legs installed, the remote receiver box must be installed outside of the firebox away from excessive heat. However, the remote receiver may be placed under the elevated Loft Burner by installing the Burner Support Legs. See Figure 10.
  If the Support Legs are to be installed, simply bend each of the legs into a "U" shape to match the drawing in Figure 11. Next, install the legs into the bottom base. Line up the three tabs on each leg with the slots provided, using pliers twist each of the tabs slightly in order to secure the legs to the bottom base.
- Installation of the Burner Support Legs is necessary on the VFIL (remote ignition) series burners. These models include a remote receiver box that must be placed under the bottom base of the Loft Burner assembly to shield the receiver batteries from excessive heat. See Figure 17.
  To install the Support Legs, simply bend each of the legs into a "U" shape to match the drawing in Figure 11. Next, install the legs into the bottom base. Line up the three tabs on each leg with the slots provided, using pliers, twist each of the tabs slightly to secure the legs to the bottom base. See Figure 10.

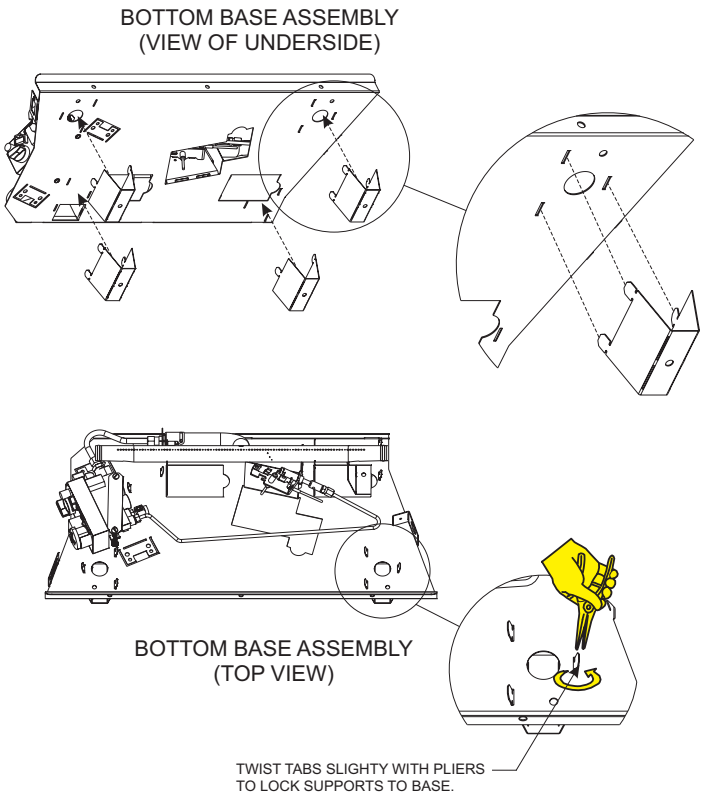

Figure 10

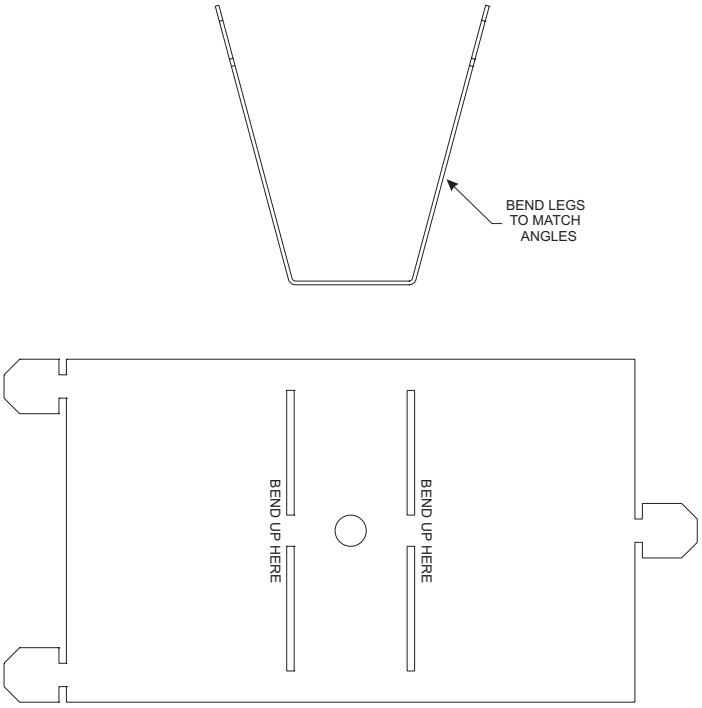

Figure 11

BEFORE FULLY INSTALLING THE APPLIANCE

Set Up Procedure: (Figures 12a and 12b)

1. Remove top cover assembly as illustrated by Figure 15. Remove three #8 x 1/2" Phillips Head screws from the front edge, then gently lift upward on the top cover assembly to pivot. Shift the top cover to the right and rearward to disengage the locking tabs at rear flange.
2. Set top cover assembly to the side until all gas connections, wiring, base securement and leakage tests are conducted.
3. Center the gas appliance base in the fireplace or firebox. Make certain the front edge of the burner sits inside the front edge of the fireplace or firebox opening.
4. Anchor holes are provided in the bottom base (or optional support legs) of the burner housing. After centering the burner base correctly, mark the hole positions on the fireplace/firebox floor. Drill two 5/32" diameter holes approximately 1-1/2" deep for masonry screws or 1/8" hole for sheet metal screws.
5. Anchor the base assembly to the fireplace/firebox floor using the screws provided. Refer to Figure 12a or 12b.
6. Reinstall top cover to base with three #8 x 1/2" screws.

Proper installation of the base is essential to prevent any movement of the burner and controls during operation.

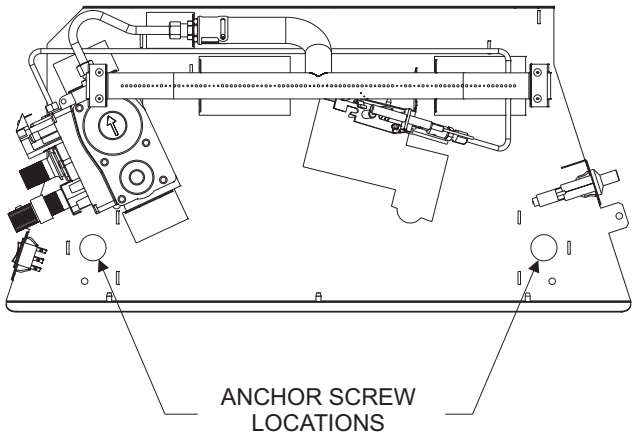

VFRL Series without support legs installed

Figure 12a

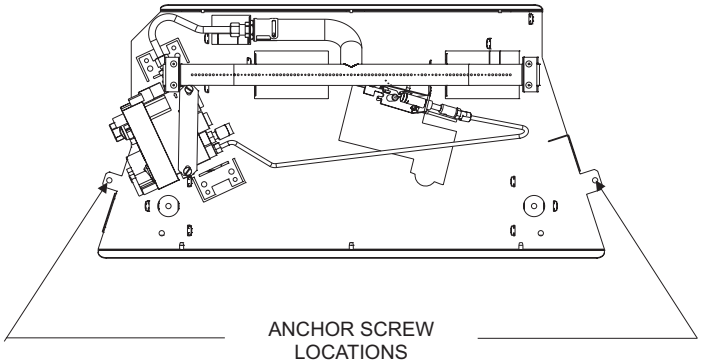

VFIL Series with support legs installed

Figure 12b

GAS SUPPLY

Check all local codes for requirements, especially for the size and type of gas supply line required.

Recommended Gas Pipe Diameter

Pipe Length	Schedule 40 Pipe Inside Diameter		Tubing, Type L Outside Diameter	
	Nat.	L.P.	Nat.	L.P.
0-10 feet 0-3 meters	1/2” 12.7mm	3/8” 9.5mm	1/2” 12.7mm	3/8” 9.5mm
10-40 feet 4-12 meters	1/2” 12.7mm	1/2” 12.7mm	5/8” 15.9mm	1/2” 12.7mm
40-100 feet 13-30 meters	1/2” 12.7mm	1/2” 12.7mm	3/4” 19mm	1/2” 12.7mm
100-150 feet 31-46 meters	3/4” 19mm	1/2” 12.7mm	7/8” 22.2mm	3/4” 19mm

Note: Never use plastic pipe. Check to confirm whether your local codes allow copper tubing or galvanized.

Note: Since some municipalities have additional local codes, it is always best to consult your local authority and installation code.

Note: The gas line may be routed from either side of the firebox and connected to the gas inlet on the gas valve.

Installing a New Main Gas Cock

Each appliance should have its own manual gas cock.

A manual main gas cock should be located in the vicinity of the unit. Where none exists, or where its size or location is not adequate, contact your local authorized installer for installation or relocation.

Compounds used on threaded joints of gas piping shall be resistant to the action of liquefied petroleum gases. The gas lines must be checked for leaks by the installer. This should be done with a soap solution watching for bubbles on all exposed connections, and if unexposed, a pressure test should be made.

Never use an exposed flame to check for leaks. Appliance must be disconnected from piping at inlet of control valve and pipe capped or plugged for pressure test. Never pressure test with appliance connected; control valve will sustain damage!

A gas valve and ground joint union should be installed in the gas line upstream of the gas control to aid in servicing. It is required by the National Fuel Gas Code that a drip line be installed near the gas inlet. This should consist of a vertical length of pipe tee connected into the gas line that is capped on the bottom in which condensation and foreign particles may collect.

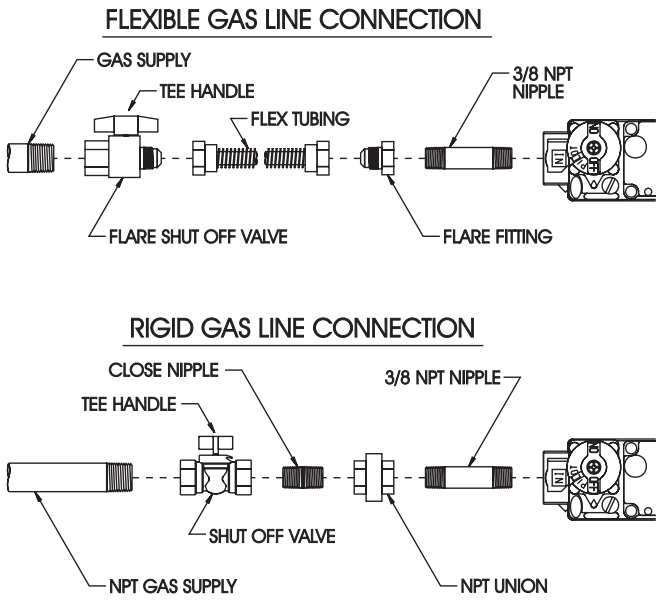

Figure 13

The use of the following gas connectors is recommended:

— ANS Z21.24 Appliance Connectors of Corrugated Metal Tubing and Fittings

— ANS Z21.45 Assembled Flexible Appliance Connectors of Other Than All-Metal Construction

The above connectors may be used if acceptable by the authority having jurisdiction. The state of Massachusetts requires that a flexible appliance connector cannot exceed three feet in length.

Pressure Testing of the Gas Supply System

1. To check the inlet pressure to the gas valve, a 1/8" (3.175mm) N.P.T. plugged tapping, accessible for test gauge connection, must be placed immediately upstream of the gas supply connection to the appliance.
2. The appliance and its individual shutoff valve must be disconnected from the gas supply piping system during any pressure testing of that system at test pressures in excess of 1/2 psig (3.5 kPa).
3. The appliance must be isolated from the gas supply piping system by closing its individual manual shutoff valve during any pressure testing of the gas supply piping system at test pressures equal to or less than 1/2 psig (3.5 kPa).

Caution: If the gas pressure exceeds the maximum limits listed on page 8 of this manual or on the installed gas valve, it will result in a hazardous condition.

OPERATION INSTRUCTIONS/FLAME APPEARANCE

Flames from the pilot (near the center of the burner) as well as the main flame should be visually checked as the burner assembly is installed and initially operated.

In normal operation at full rate, the flame appearance should be random yellow flames above the burner.

NOTE: all flames will be random by design, flame height will go up and down.

Avoid any drafts that alter burner flame patterns. Do not allow fans to blow directly into fireplace. Do not place a blower inside the burner area of the firebox. Ceiling fans will create drafts that alter flame patterns. Sooting and improper burning will result.

During manufacturing, fabricating, and shipping, various components of this appliance are treated with certain oils, films or bonding agents. These chemicals are not harmful, but may produce annoying smoke and smells as they are burned off during the initial operation of the appliance, possibly causing headaches or eye or lung irritation. This is a normal and temporary occurrence.

The initial break-in operation should last 2-3 hours with the burner at the highest setting. Provide maximum ventilation by opening windows or doors to allow odors to dissipate. Any odors remaining after this initial break-in will be slight and will disappear with continued use.

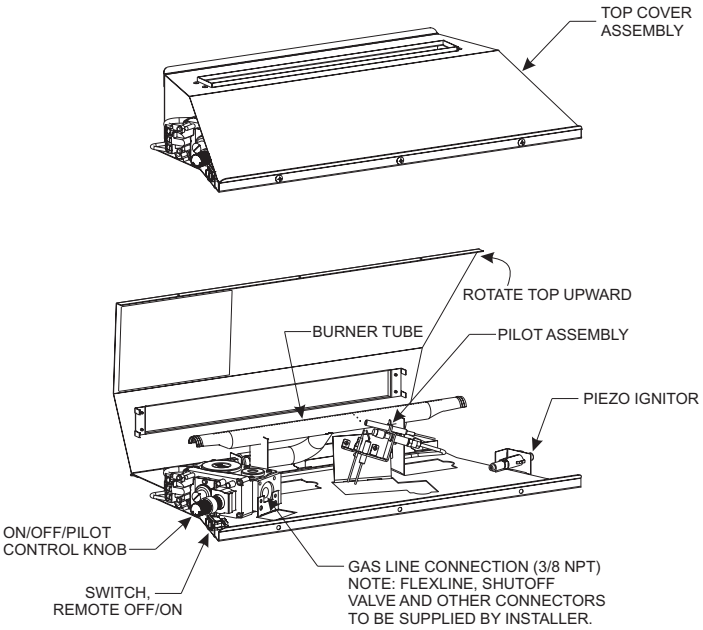

NOTE: TOP COVER ASSEMBLY ROTATED UP FOR ACCESSIBILITY

Figure 14

To remove top cover to gain access to gas valve for hookup of gas line and burner securement, remove three #8 x 1/2" screws at the lower front of the burner assembly, then rotate the top cover upward.

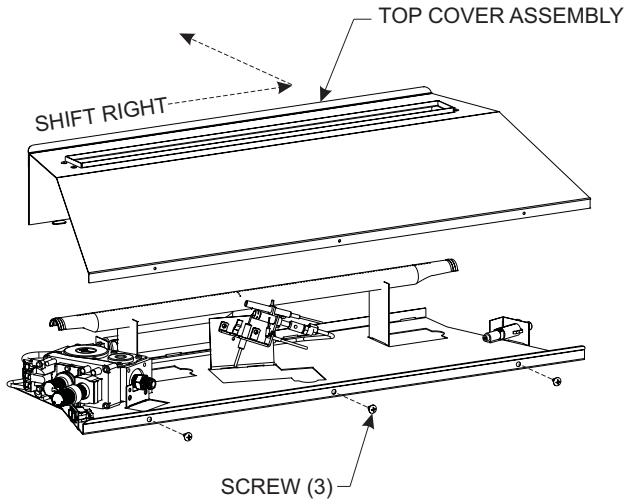

Figure 15

To remove the top cover, rotate the cover upward, shift 3/8" to the right, then rearward to release the locking tabs at the back of the burner base.

WIRING - VFRL MODELS

Thermostats are not approved on vented decorative appliances.

Label all wires prior to disconnection when servicing controls. Wiring errors can cause improper and dangerous operation. Verify proper operation after servicing.

18", 24" and 30" gas appliance (Millivolt) thermopile self powers the gas valve and does not require 110 volts. See Figure 16 to provide optional wall switch, thermostat, or remote control. Maximum length of 20 feet of 16 AWG conductor wires should be used with all optional switches.

Check System Operation
Millivolt system and all individual components may be checked with a millivolt meter 0-1000 MV range.

Remote Receiver
Use the following steps to place the **remote receiver** to the burner base assembly.

Attention:
1. The remote receiver **can not** be placed behind or inside the gas burner assembly. The remote receiver should be located outside of the firebox.
2. The remote receiver must be placed away from the gas appliance base. The receiver can be placed under the burner assembly in a lower air moving compartment of a fireplace or firebox, installed in a wall mounted junction box, or set on the hearth extension.

Note: Do not let remote control receiver come in contact with the top of the appliance.

On a circulating vent-free firebox, it may be possible to install the remote control receiver behind the bottom operable louver.

Refer to remote control installation and operating instructions for more details on remote control.

750 Millivolt System
When you ignite the pilot, the thermocouple produces millivolts (electrical current) which energizes the magnet in the gas valve. After 30 seconds to 1 minute time period you can release the gas control knob and the pilot will stay ON. Allow your pilot flame to operate an additional one to two minutes before you turn the gas control knob from the PILOT position to the ON position. This time period allows the millivolts (electrical current) to buildup to a sufficient level allowing the gas control to operate properly.

Millivolt Control
The valve regulator controls the burner pressure which should be checked at the pressure test point. Turn captured screw counter clockwise 2 or 3 turns and then place tubing to pressure gauge over test point (Use test point “A” closest to control knob). After taking pressure reading, be sure and turn captured screw clockwise firmly to re-seal. Do not over torque. Check for gas leaks.

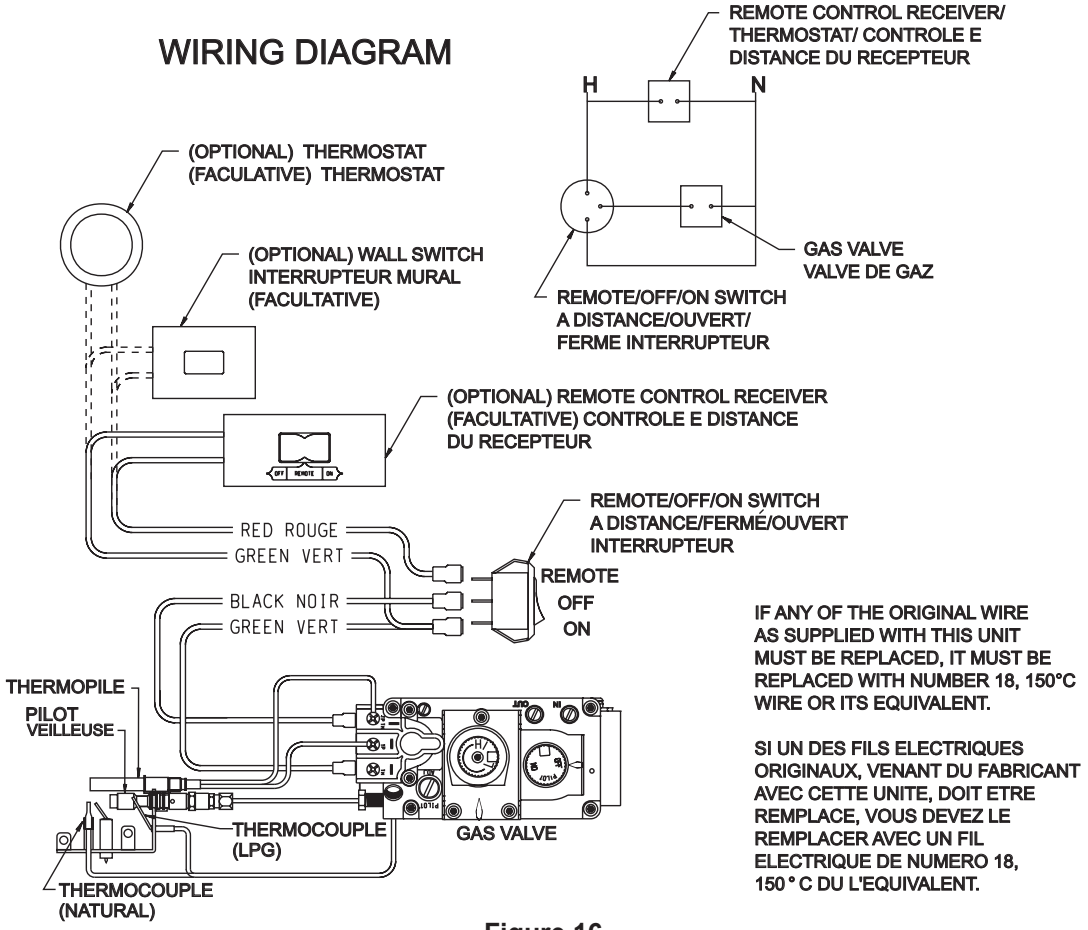

Figure 16

VFRL(18,24,30) LIGHTING INSTRUCTIONS

FOR YOUR SAFETY READ BEFORE LIGHTING

WARNING: If you do not follow these instructions exactly, a fire or explosion may result causing property damage, personal injury or loss of life.

A. This appliance has a pilot which must be lighted by hand. When lighting the pilot, follow these instructions exactly.

B. BEFORE LIGHTING, smell all around the appliance area for gas. Be sure to smell next to the floor because some gas is heavier than air and will settle on the floor.

WHAT TO DO IF YOU SMELL GAS
- **Do not try to light any appliance**
- **Do not touch any electrical switch; Do not use any phone in your building**
- **Immediately call your gas supplier from a neighbor's phone. Follow the gas supplier's instructions.**
- **If you cannot reach your gas supplier, call the fire department.**

C. Use only your hand to push in or turn the gas control knob. Never use tools. If the knob will not push in or turn by hand, don't try to repair it, call a qualified service technician. Force or attempted repair may result in a fire or explosion.

D. Do not use this appliance if any part has been under water. Immediately call a qualified service technician to inspect the appliance and to replace any part of the control system and any gas control which has been under water.

LIGHTING INSTRUCTIONS

1. STOP! Read the safety information above on this page.
2. Open bottom louver assembly (if applicable).
3. Set REMOTE/OFF/ON switch to "OFF".
4. Turn off all electric power to the appliance (if applicable).
5. Push in gas control knob slightly and turn clockwise to "OFF".
   NOTE: Knob cannot be turned from "PILOT" to "OFF" unless knob is pushed in slightly. Do not force.
6. Wait ten minutes to clear out any gas. Then smell for gas, including near the floor. If you smell gas, STOP! Follow "B" in the safety information above. If you do not smell gas, go to the next step.
7. Find pilot - Follow metal tube from gas control. The pilot is located next to the burner, near the right side.
8. Turn gas control knob counterclockwise to "PILOT".

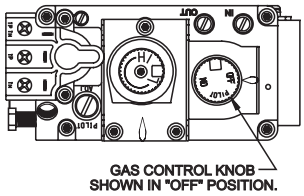

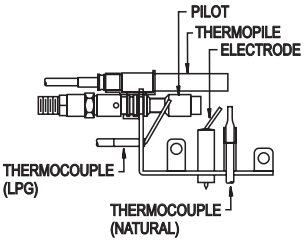

9. Push in control knob all the way and hold in. Repeatedly push the Piezo Ignitor Button until the pilot is lit. Continue to hold the control knob in for about one minute after the pilot is lit. Release knob, and it will pop back up. Pilot should remain lit. If it goes out, repeat steps 5 through 9.
   - If knob does not pop up when released, STOP and IMMEDIATELY call a qualified service technician or gas supplier.
   - If the pilot will not stay lit after several tries, turn the gas control knob to "OFF" and call your service technician or gas supplier.
10. Turn gas control knob counterclockwise to "ON".
11. Set REMOTE/OFF/ON switch to desired setting.
12. Turn on all electric power to the appliance (if applicable).
13. Close bottom louver assembly (if applicable).

TO TURN OFF GAS TO APPLIANCE

1. Open bottom louver assembly (if applicable).
2. Set REMOTE/OFF/ON switch to OFF.
3. Turn off all electric power to the appliance if service is to be performed (if applicable).
4. Push in gas control knob slightly and turn clockwise to "OFF". Do not force.
5. Close bottom louver assembly (if applicable).

VFRL1810(N,P) LIGHTING INSTRUCTIONS

FOR YOUR SAFETY READ BEFORE LIGHTING

WARNING: If you do not follow these instructions exactly, a fire or explosion may result causing property damage, personal injury or loss of life.

A. This appliance has a pilot which must be lighted by hand. When lighting the pilot, follow these instructions exactly.

B. BEFORE LIGHTING, smell all around the appliance area for gas. Be sure to smell next to the floor because some gas is heavier than air and will settle on the floor.

WHAT TO DO IF YOU SMELL GAS
- **Do not try to light any appliance**
- **Do not touch any electrical switch; Do not use any phone in your building**
- **Immediately call your gas supplier from a neighbor's phone. Follow the gas supplier's instructions.**
- **If you cannot reach your gas supplier, call the fire department.**

C. Use only your hand to push in or turn the gas control knob. Never use tools. If the knob will not push in or turn by hand, don't try to repair it, call a qualified service technician. Force or attempted repair may result in a fire or explosion.

D. Do not use this appliance if any part has been under water. Immediately call a qualified service technician to inspect the appliance and to replace any part of the control system and any gas control which has been under water.

LIGHTING INSTRUCTIONS

1. STOP! Read the safety information above on this page.
2. Set REMOTE/OFF/ON switch to "OFF".
3. Turn off all electric power to the appliance (if applicable).
4. Open bottom louver assembly (if applicable).
5. Push in gas control knob slightly and turn clockwise to "OFF". NOTE: Knob cannot be turned from "PILOT" to "OFF" unless knob is pushed in slightly. Do not force.
6. Wait ten minutes to clear out any gas. Then smell for gas, including near the floor. If you smell gas, STOP! Follow "B" in the safety information above. If you do not smell gas, go to the next step.
7. Find pilot - Follow metal tube from gas control. The pilot is located next to the burner, near the right side.
8. Turn gas control knob counterclockwise to "PILOT".

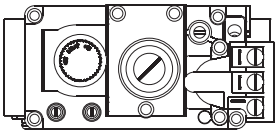

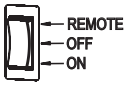

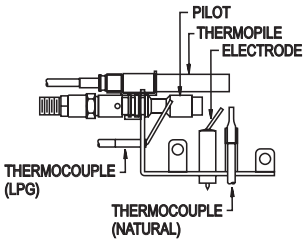

9. Push in control knob all the way and hold in. Repeatedly push the Piezo Ignitor Button until the pilot is lit. Continue to hold the control knob in for about one minute after the pilot is lit. Release knob, and it will pop back up. Pilot should remain lit. If it goes out, repeat steps 5 through 9.
   - If knob does not pop up when released, STOP and IMMEDIATELY call a qualified service technician or gas supplier.
   - If the pilot will not stay lit after several tries, turn the gas control knob to "OFF" and call your service technician or gas supplier.
10. Turn gas control knob counterclockwise to "ON".
11. Close bottom louver assembly (if applicable).
12. Turn on all electric power to the appliance (if applicable).
13. Set REMOTE/OFF/ON switch to desired setting.

TO TURN OFF GAS TO APPLIANCE

1. Set REMOTE/OFF/ON switch to OFF.
2. Turn off all electric power to the appliance if service is to be performed (if applicable).
3. Open bottom louver assembly (if applicable).
4. Push in gas control knob slightly and turn clockwise to "OFF". Do not force.
5. Close bottom louver assembly (if applicable).

Thermostats are not approved on vented decorative appliances.

Label all wires prior to disconnection when servicing controls. Wiring errors can cause improper and dangerous operation. Verify proper operation after servicing.

The VFIL series Loft Burners operate with a GV60 battery-powered electronic remote ignition and control system.

Prior to operation of the VFIL series Loft Burner, install AA batteries into the Remote Receiver module, and 9-volt battery into the hand held remote.

The remote control and receiver should be programmed together from the factory. All settings for time and temperature control must be set up by the user as desired.

Installation of the Burner Support Legs
The VFIL series Loft Burners must be elevated with the four burner support legs as illustrated by figures 10 and 11 on page 15.
Caution: The Remote Receiver module must be placed under the right hand side of the burner base prior to operation of the appliance.

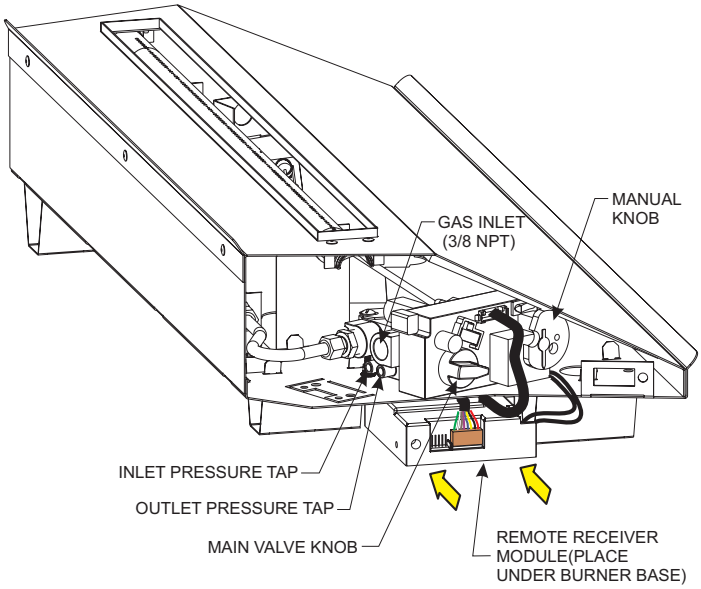

NOTE: GAS FLEXLINE WITH SHUTOFF VALVE (SUPPLIED BY INSTALLER) TO BE ATTACHED TO GAS INLET ON VALVE.

Figure 17

VFIL SERIES REMOTE ELECTRONIC IGNITION AND CONTROL SYSTEM

APPLICATION

GV60 is a battery-powered electronic and control system for gas appliances with pilot burners and ODS systems.

GENERAL NOTES

Radio Frequency Remote

433.92 MHz for Europe; 315 MHz for U.S. (FCC ID: RTD-G6R) and for Canada (IC: 4943A-G6R).

This device complies with part 15 of the FCC Rules. Operation is subject to the following two conditions: (1) This device may not cause harmful interference, and (2) This device must accept any interference received, including interference that may cause undesired operation. Changes or modifications not expressly approved by the party responsible for compliance could void the user's authority to operate the equipment.

Batteries - Remote Handset:

1 x 9V block (quality alkaline recommended)
Low battery indicator on handsets with display.
Handsets without display: the red LED gets darker.
Battery replacement is recommended after 2 years.

Batteries - Receiver:

4 x 1.5V "AA" (quality alkaline recommended)

***Notice*:** An AC Mains Adapter may be used instead of batteries (only the Mertik Maxitrol or an AC Mains Adapter approved by Mertik Maxitrol can be used).

***Notice*:** During a power outage the AC Mains Adapter must be unplugged from the receiver to operate in the battery mode.

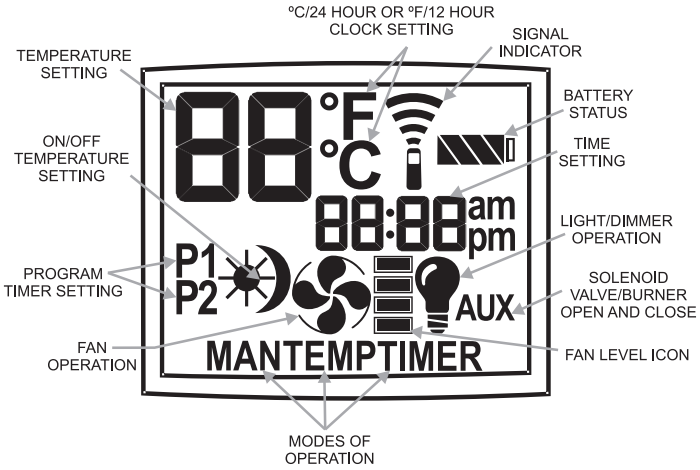

VFIL SERIES REMOTE ELECTRONIC IGNITION AND CONTROL SYSTEM

AUTOMATIC OPERATION

⚠ WARNING
Wiring of valve and receiver must be completed before starting ignition. Failure to do so could damage the electronics.

SETTING THE ELECTRONICS CODE

***Notice*:** The remote control and receiver are pre-programmed at the factory. However, if for some reason they do not communicate to each other, follow these steps to re-program.

Radio Frequency Remote

A code is selected automatically for all Mertik Maxitrol electronics from among 65,000 random codes available. The receiver has to learn the code of the handset:

- Press and hold the receiver's reset button (see figure 18) until you hear two beeps. After the second, longer beep, release the reset button.
- Within the subsequent 20 seconds press the (small flame) button on the handset until you hear two additional short beeps confirming the code is set. If you hear one long beep, this indicates the code learning sequence has failed or the wiring is incorrect.

***Notice*:** This is a one time setting only, and is not required when changing the batteries in the remote or receiver.

Figure 18

TO TURN ON APPLIANCE

⚠ WARNING
When pilot ignition is confirmed, motor turns automatically to maximum flame height.

- Turn MANUAL knob to the ON, full counterclockwise position.
- Place ON/OFF switch (if equipped) in (ON position).

Standard, Display, Timer/Thermostat RF Remote Handset

- Simultaneously press and hold the **OFF** and (large flame) buttons until a short beep confirms the start sequence has begun; release buttons.
- Continuing beeps confirm the ignition is in process.
- Once pilot ignition is confirmed, there is main gas flow.
- After main burner ignition the handset will automatically go into manual mode.

***Caution*:** If the pilot does not stay lit after several tries, turn the main valve knob to **OFF** and follow the instructions "Turn Off Gas to Appliance".

Figure 19

Figure 20

TO TURN OFF APPLIANCE

Press OFF button on remote handset.

***Notice*: Press** (small flame) to turn main gas to pilot gas.

ADJUSTMENT - FLAME HEIGHT

Standard, Display, Timer/Thermostat RF Remote Handsets

- In standby mode: Press (large flame) to increase flame height.
- Press (small flame) to decrease flame height or to set appliance at pilot flame.
- For fine adjustment tap the large/small flames.

Designated Low Fire and Hight Fire

- Double-click (small flame) button. “LO” will be displayed.
- Double-click (large flame) button. Flame automatically goes to high fire. “HI” will be displayed.

***Caution*:** If the appliance will not operate, follow the instructions "TURN OFF GAS TO APPLIANCE".

SETTING °C/24 HOUR OR °F/12 HOUR CLOCK

Display, Timer/Thermostat RF Remote Handsets

- Press **OFF** and (small flame) until display changes from Fahrenheit/12 hour clock to Celsius/24 hour clock and vice versa.

VFIL SERIES REMOTE ELECTRONIC IGNITION AND CONTROL SYSTEM

SETTING THE TIME
Display, Timer/Thermostat RF Remote Handsets

- The display will flash after either:
  a. Installing the battery or
  b. Simultaneously pressing the (large flame) and (small flame)
- Press (large flame) to set the hour and the (small flame) to set the minute.
- Press OFF to return to manual mode or simply wait and it will automatically return to the manual mode.

CHANGING THE MODE OF OPERATION
Briefly pressing the **SET** button changes the mode of operation in the following order:

Notice: MANUAL mode can also be reached by pressing either the (large flame) or the (small flame).
and back to

MAN → ☀TEMP → ☽TEMP → TIMER → MAN

MAN **Mode - Manual Flame Height Adjustment**

- Press (large flame) to turn on the main burner.
- Press (large flame) to increase the flame height.
- Press (small flame) to decrease the flame height or to go to pilot standby position.

Notice: While pressing either button a symbol indicating transmission appears on the display. The receiver confirms transmission with a beep.

☀TEMP **- Daytime Temperature Mode**
(appliance must be in standby mode; pilot ignited): The room temperature is measured and compared to the set temperature. The flame height is then automatically adjusted to achieve the Daytime set temperature.

☽TEMP **- Nighttime Setback Temperature Mode**
(appliance must be in standby mode; pilot ignited):
The room temperature is measured and compared to the Nighttime Setback temperature. The flame height is then automatically adjusted to achieve the Nighttime Setback temperature.

TIMER **- Timer Mode**
Setting P1 ON time

- Hold the **SET** button until P1 ☀ (sun) is displayed and the time flashes.
- Set the hour by pressing the (large flame) button.
- Set the inutes by pressing the (small flame) button.

Setting P1 OFF time

- Briefly press **SET** button to scroll to setting P1 OFF time. P1 ☽ (moon) is displayed at the time flashes.
- Set the hour by pressing the (large flame) button.
- Set the inutes by pressing the (small flame) button.

SETTING THE TEMPERATURE

- Select either the ☀TEMP MODE or the ☽TEMP MODE by briefly pressing the SET button.
- Hold the **SET** button until the TEMP display flashes.
- Set the desired temperature with (large flame) or (small flame).
- Press **OFF** or simply wait to complete programming.
- ***Notice*:** When the desired room temperature is SET on the hand held remote, the burner will automatically turn on when the room temperature drops 3 degrees Fahrenheit (F) below the SET temperature. The remote system will turn the burner off when the room temperature reaches 3 degrees Fahrenheit (F) above the SET temperature. The pilot will remain lit between burner cycles when using the thermostatic remote control feature.

Default Settings

Program 1:	P1 ☀:6:00am	P1 ☽:8:00am
Program 2:	P2 ☀:11:50pm	P2 ☽:11:50pm

- 2 ON times can be programmed ☀ per day.
- The day starts at 12:00am, ends at 11:50pm
- The ON/OFF times have to be programmed in the order P1 ☀ ≤ P1 ☽ < P2 ☀ ≤ ☽.
- If P1 ☀ = P1 ☽ or P2 ☀ = P2 ☽ the timer is deactivated.
- To have the fire over night, it can be set:
  P2 ☽ 11:50am and P1 ☀ 12:00am
- Select Timer Mode by briefly pressing the **SET** button.

6 Hour no Communication Function

- Manual Mode/Temperature/Timer Mode: The valve will turn to pilot flame if there is no change in flame height for a 6 hour period. In Termperature/Timer Mode, if the ambient room temperature changes, the flame height willa djust automatically to maintain set temperature, and the fire will continue to function normally. The valve will turn to pilot flame if the set temperature and the ambient room temperature remain the same over a 6 hour period.

Five Day Shut Off

- The system shuts off the fire completely if there is no change in the flame height for 5 days.

NOTE: Before the next ignition there is a 2 minute waiting period.

MANUAL OPERATION
Follow appliance lighting instructions for gaining access to the gas control and the pilot burner. Access to the pilot burner is only required for ignition with a match.

When turning main valve knob, do not force. Knob has a slip clutch that clicks until the end stops are reached. This allows for manual flame height adjustment as well as adjustment to pilot standby position.

1. **STOP!** Read the safety information included before proceeding.
2. Turn main valve knob to the **OFF**, full clockwise position.
3. Turn MANUAL knob to the **MAN**, full clockwise position.
4. Place ON/OFF switch (if equipped) in **O** (OFF position).

5. Wait five minutes to clear out any gas. Verify that no gas is in the area around the appliance, including near the floor. **If you detect gas STOP!** Follow "A" in the safety information. If no gas is present, proceed to step 6.
6. Place ON/OFF switch in I (ON position).
7. With the MANUAL knob in **MAN** position a manual pilot valve operator and piezo igniter are accessible.

   Ignition with match:
   Fully push down manual pilot valve operator and hold in, to start pilot gas flow.
   Immediately light the pilot with a match, while continuing to hold in the manual pilot valve operator for about one minute after the pilot is lit. Release manual pilot valve operator. If pilot does not stay lit, wait five minutes and repeat.

   Ignition with piezo igniter:
   Change the ignition cable from the receiver to the valve. Use the push piezo igniter to ignite. If pilot does not stay lit, wait five minutes and repeat.
   ***Caution*:** If the pilot does not stay lit after several tries, turn the gas control knob (main valve knob) to **OFF** and proceed to step 11.
8. If applicable, reinstall the top cover on the burner base before proceeding.
9. Turn MANUAL knob to the **ON**, full counterclockwise position.
10. Turn main valve knob to the full **ON**, full counterclockwise position.
11. If the appliance will not operate, follow the instructions "TURN OFF GAS TO APPLIANCE" and call the service technician or gas supplier.

TURN OFF GAS TO APPLIANCE

- Press OFF button on remote.
- Follow appliance instructions for gaining accessibility to the gas control.
- Place ON/OFF switch in **O** (off position).
- Turn main valve knob to the **OFF** full clockwise position.
- Replace appliance top cover.

MISCELLANEOUS

Low Battery Indication

Receiver:
three short beeps will sound when motor turns
Remote with display:
"BATT" will appear on display

***Notice*:** Thermostatic Displays/Handsets: If the battery of the handset is low or if the transmitter is out of the communication range, the motor turns down the valve to pilot gas after 6 hours.

***Notice*:** With very low battery the GV60 system shuts off the fire completely. This will not happen if the power supply is interrupted.

Battery replacement

Battery replacement is recommended at the beginning of each heating season. Do not use metal tools to remove batteries. Using a metal tool could cause a short that may damage the receiver.

Location of Receiver

When the RF-receiver is placed in the appliance, the surrounding metal can reduce reception considerably. The position of th antenna on the receiver also influences reception. It is recommended to straighten the antenna. The antenna must not come in contact or cross the ignition wire, this may render the receiver inoperable.

⚠ **CAUTION:** Keep receiver free from debris and dirt. Protect the receiver with a plastic bag until all construction is complete.

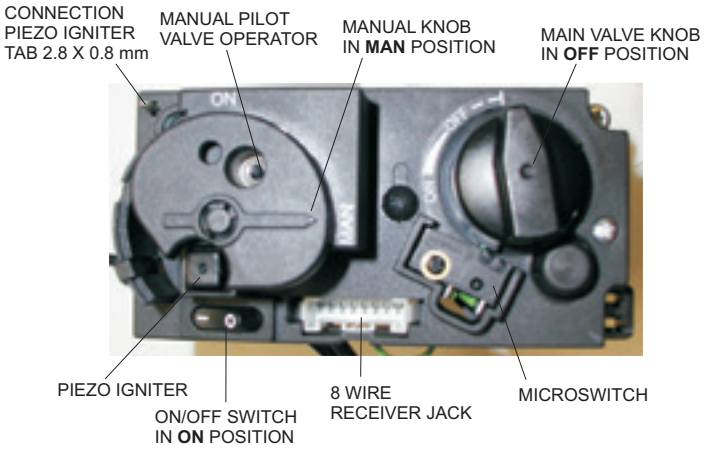

Figure 21

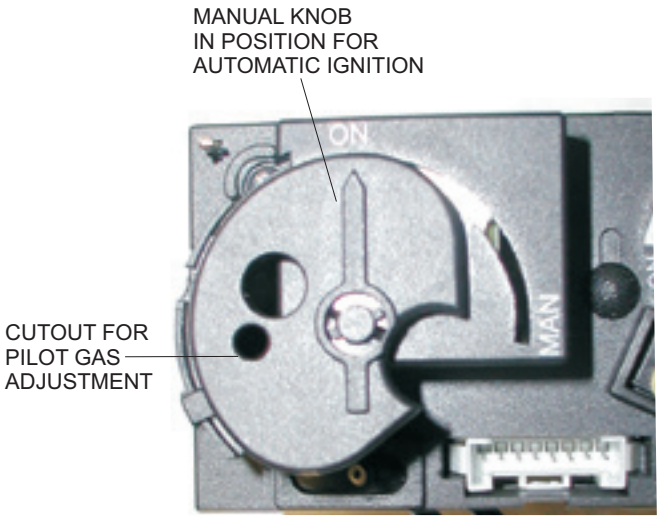

Figure 22

VFIL(18,24,30) LIGHTING INSTRUCTIONS

FOR YOUR SAFETY READ BEFORE LIGHTING

⚠ WARNING: If you do not follow these instructions exactly, a fire or explosion may result causing property damage, personal injury or loss of life.

A. BEFORE LIGHTING smell all around the appliance area for gas. Be sure to smell next to the floor because some gas is heavier than air and will settle on the floor.

WHAT TO DO IF YOU SMELL GAS

- **Do not try to light any appliance.**
- **Do not touch any electrical switch.**
- **Do not use any phone in your building.**
- **Immediately call your gas supplier from a neighbor's phone. Follow the gas supplier's instructions.**
- **If you can not reach your gas supplier, call the fire department.**

B. Use only your hand to push in or turn the gas control knob. Never use tools. If the knob will not push in or turn by hand, don't try to repair it, call a qualified service technician. Force or attempted repair may result in a fire or explosion.

C. Do not use this appliance if any part has been under water. Immediately call a qualified service technician to inspect the appliance and to replace any part of the control system and any gas control which has been under water.

LIGHTING INSTRUCTIONS

1. STOP! Read the safety information above on this page.
2. Open bottom louver assembly, (if applicable).
3. Press the "I/O" (ON/OFF) button on the valve to face to "O" (OFF).
4. Wait five (5) minutes to clear out any gas, then smell for gas including near the floor. If you smell gas, STOP! Follow "A" in the safety information above. If you don't smell gas, go to the next step.

LIGHTING PROCEDURE - HANDSET METHOD

1. Turn control arrow on valve face to "ON." Press the "I/O" button to "I". Press the "OFF" and "UP" buttons on the handset firmly at the same time. A long "beep" will sound, followed by 5 short "beeps". Ignitor will spark and will continue until pilot is lit. For full Remote Control operation see appliance installation manual.

LIGHTING PROCEDURE - MANUAL METHOD

1. Press the "I/O" (ON/OFF) button to "I" for on.
2. Turn control arrow on valve face to "MAN" for manual.
3. Change the ignition cable from the receiver to the valve (Piezo Ignition tab).
4. Using a small bladed screwdriver, press & hold button within hole on control. Manually depress piezo igniter button to light the pilot. If pilot does not light, step 4 can be immediately repeated. If the pilot will not stay lit after several tries, follow the instructions "To Turn Off Gas to Appliance" and call your service technician or gas supplier.
5. When the pilot is lit and stable, turn the valve control knob counterclockwise to the "ON" position. Turn flame height control knob counterclockwise and the main burner will ignite. Turn flame height control knob to adjust flame height.

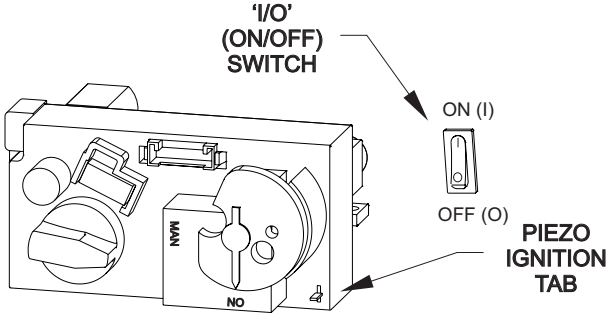

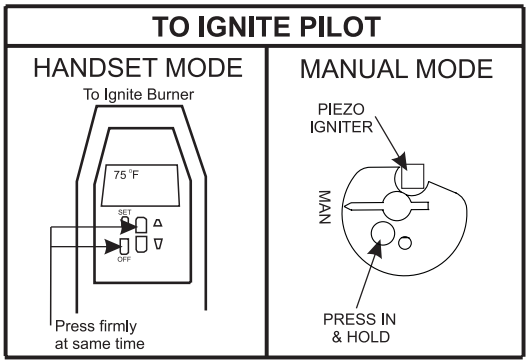

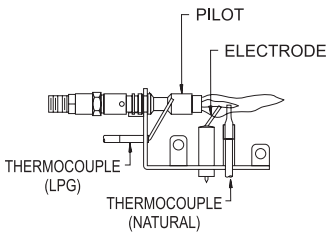

CORRECT PILOT FLAME

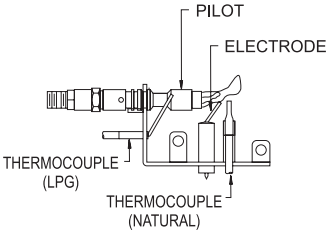

INCORRECT PILOT FLAME

TO TURN OFF GAS TO THE APPLIANCE

MANUAL MODE - To turn off main burner, turn flame height control knob fully clockwise . To fully shut down, press "I/O" button to "O".

HANDSET MODE - Press "OFF" button on handset. To fully shut down, press "I/O" button to "O".

VFIL(18,24,30) WIRING DIAGRAM

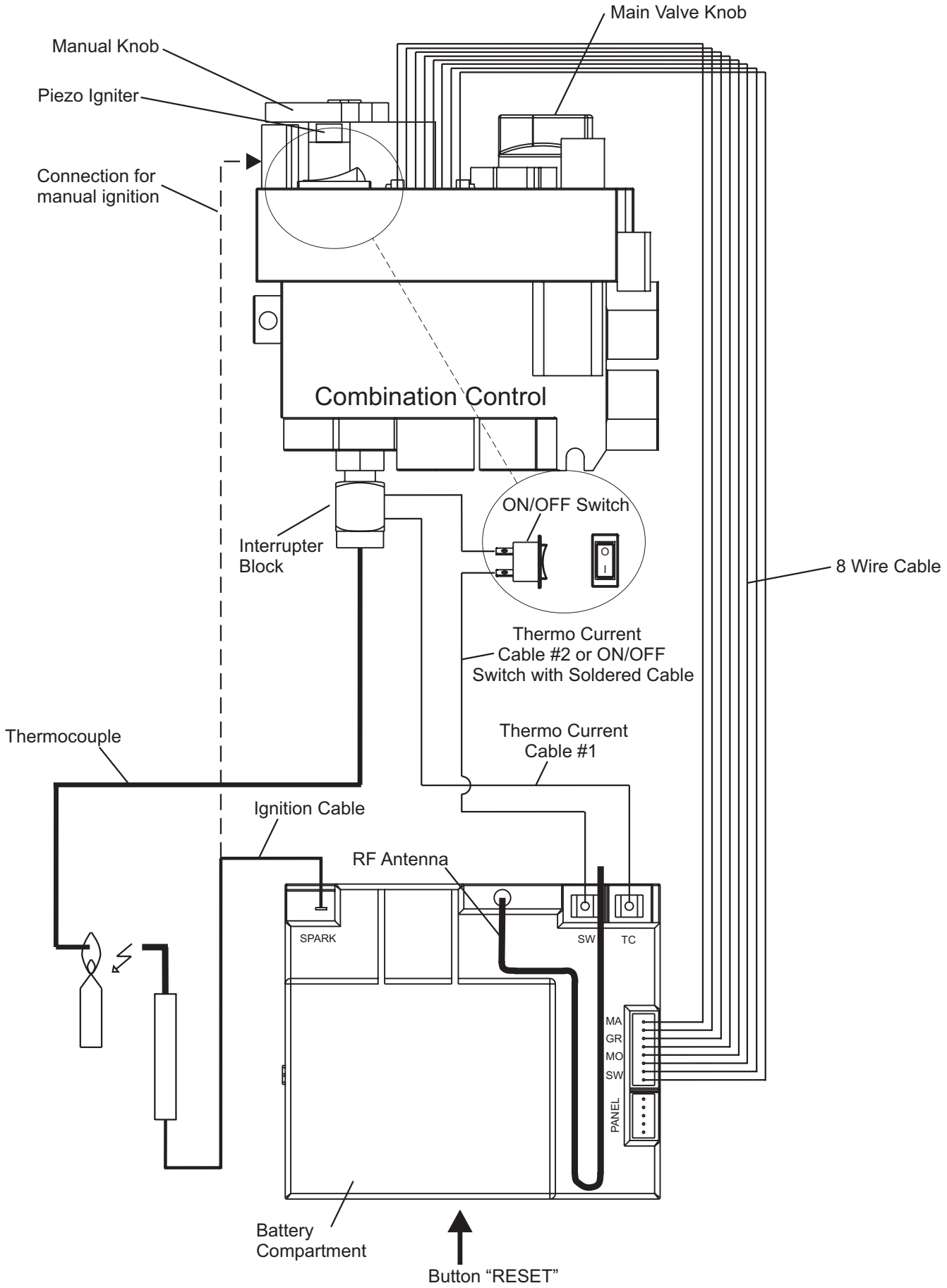

PILOT FLAME CHARACTERISTICS

Figures 23 and 24 show a correct pilot flame pattern. The correct flame will be blue and will extend beyond the thermocouple. The flame will surround the thermocouple just below the tip. A slight yellow flame may occur where the pilot flame and main burner flame meet. Figures 25 and 26 show an incorrect pilot flame pattern. The incorrect pilot flame is not touching the thermocouple. This will cause the thermocouple to cool. When the thermocouple cools, the heater will shut down.

Correct Pilot Flame Pattern for VFRL

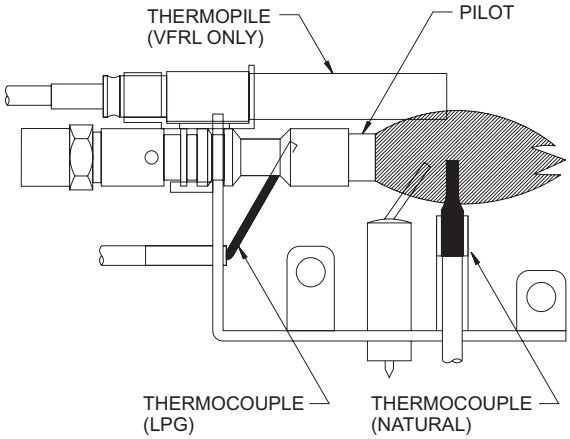

Figure 23

Correct Pilot Flame Pattern for VFIL

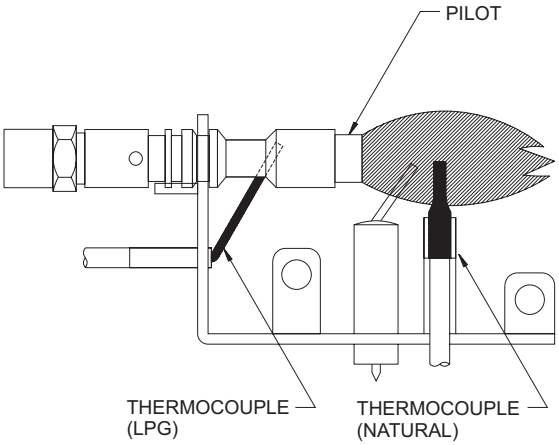

Figure 24

Incorrect Pilot Flame Pattern for VFRL

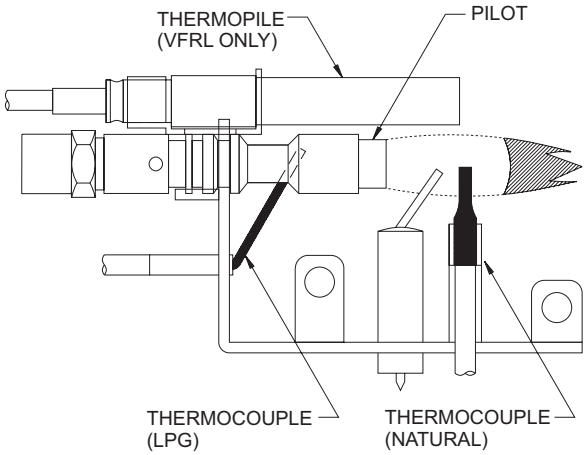

Figure 25

Incorrect Flame Pattern for VFIL

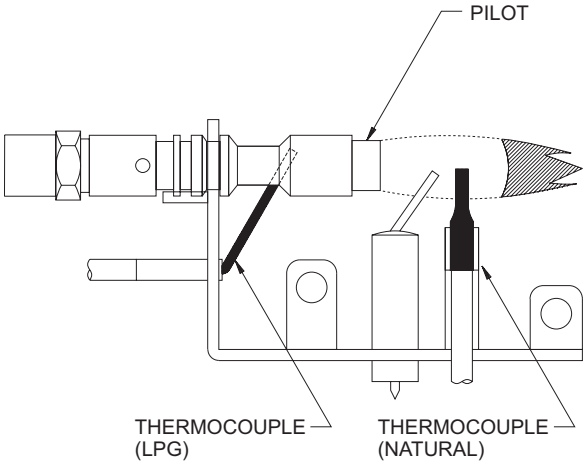

Figure 26

If pilot flame pattern is incorrect, as shown in Figures 25 and 26

- See Troubleshooting, page 31.

PILOT FLAME CHARACTERISTICS

Cleaning and Maintenance/Pilot
Oxygen Depletion Sensor Pilot (Figures 27 and 28)
When the pilot has a large yellow tip flame, clean the Oxygen Depletion Sensor as follows:

1. Clean the ODS pilot by loosening nut B from the pilot tubing. When this procedure is required, grasp nut A with an open end wrench.
2. Blow air pressure through the holes indicated by the arrows. This will blow out foreign materials such as dust, lint and spider webs. Tighten nut B also by grasping nut A.

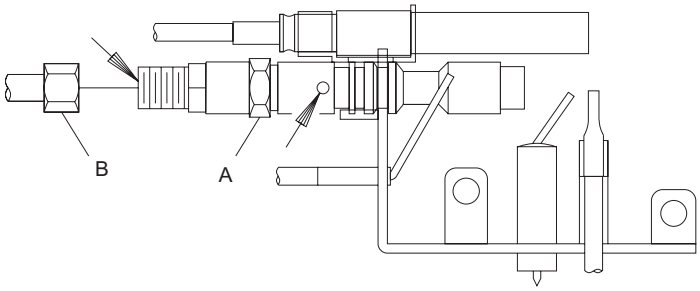

VFRL Series
Figure 27

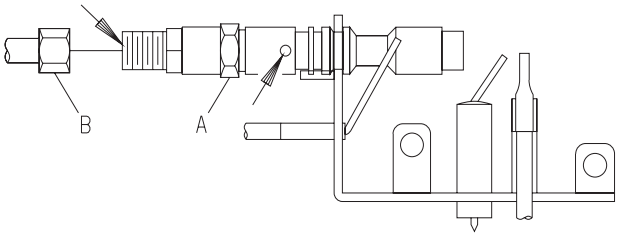

VFIL Series
Figure 28

CLEANING AND SERVICING

Annual inspection and cleaning by your dealer or qualified service technician is recommended to prevent malfunction and/or sooting.

TURN OFF HEATER AND ALLOW TO COOL BEFORE CLEANING.
Remove any optional decorative covers or decorative glass material. Gloves are recommended.

PERIODIC CLEANING - Refer to parts diagram for location of items discussed below.

- Do not use cleaning fluid to clean any part of heater.
- Remove loose particles and dust from the burner, controls and grate.
- Inspect and clean burner air intake hole. Remove lint or particles with brush. Failure to keep air intake hole clean will result in sooting and poor combustion.

ANNUAL CLEANING/INSPECTION - Refer to parts diagram for location of items discussed below.

- Inspect and clean burner air intake hole. Remove lint or particles with vacuum or brush. Failure to keep air intake hole clean will result in sooting and poor combustion.
- Inspect and clean all burner ports.
- Inspect ODS pilot for operation and accumulation of lint at air intake holes.
- Verify flame pattern for proper operation.
- Verify smooth and responsive ignition of main burner.

TROUBLESHOOTING
SYMPTOMS, POSSIBLE CAUSES AND CORRECTIONS

1. **When ignitor button is pressed, there is no spark at ODS/pilot.**
   a. Ignitor electrode positioned wrong - Replace pilot.
   b. Ignitor electrode is broken - Replace pilot.
   c. Ignitor electrode not connected to ignitor cable - Reconnect ignitor cable.
   d. Ignitor cable pinched or wet. Keep ignitor cable dry - Free ignitor cable if pinched by any metal or tubing.
   e. Broken ignitor cable - Replace ignitor cable.
   f. Bad piezo ignitor - Replace piezo ignitor.
2. **Appliance produces unwanted odors.**
   a. Appliance burning vapors from paint, hair spray, glues, etc. - Ventilate room. Stop using odor causing products while heater is running.
   b. Gas leak - Locate and correct all leaks.
3. **Appliance shuts off during use. (Pilot and main burner are off.)**
   a. Not enough fresh air is available for ODS/pilot to operate - Open window and/or door for ventilation.
   b. Low line pressure - Contact local gas company.
   c. ODS/pilot is partially clogged - Clean ODS/pilot.
   d. Defective thermocouple - Replace pilot.
4. **Appliance shuts off during use. (Pilot stays on.)**
   a. Low line pressure - Check line pressure to the valve.
   b. Defective thermopile - Check pilot flame, check wire connections, output should be a minimum of 325 millivolts across. TH/TP and TP terminals with REMOTE/OFF/ON switch off.
5. **Gas odor even when control knob is in OFF position.**
   a. Gas leak - Locate and correct all leaks.
   b. Control valve defective - Replace control valve.
6. **When ignitor button is pressed, there is spark at ODS/pilot, but no ignition.**
   a. Gas supply turned off or manual shutoff valve closed - Turn on gas supply or open manual shutoff valve.
   b. Control knob not in PILOT position - Turn control knob to PILOT position.
   c. Control knob not pressed in while in PILOT position - Press in control knob while in PILOT position.
   d. Air in gas lines when installed - Continue holding down control knob. Repeat igniting operation until air is removed.
   e. ODS/pilot is clogged - Replace ODS/pilot assembly or get it serviced.
   f. Gas regulator setting is not correct - Replace gas regulator.
7. **ODS/pilot lights but flame goes out when control knob is released.**
   a. Control knob not fully pressed in - Press in control knob fully.
   b. Control knob not pressed in long enough - After ODS/pilot lights, keep control knob pressed in 30 seconds.
   c. Manual Shutoff valve not fully open - Fully open manual shutoff valve.
   d. Thermocouple connection loose at control valve - Hand tighten until snug, then tighten 1/4 turn more.
   e. Pilot flame not touching thermocouple, which allows thermocouple to cool, causing pilot flame to go out. This problem could be caused by either low gas pressure or dirty or partially clogged ODS/pilot - Contact local gas company.
   f. Thermocouple damaged - Replace thermocouple.
   g. Control valve damaged - Replace control valve.
8. **Burner does not light after ODS/pilot is lit.**
   a. Burner orifice clogged - Clean burner or replace main burner orifice.
   b. Burner orifice diameter is too small - Replace burner orifice.
   c. Inlet gas pressure is too low - Contact qualified service person.
9. **If burning at main burner orifice occurs (a loud, roaring blow torch noise).**
   a. You must turn off burner assembly and contact a qualified service person.
   b. Manifold pressure is too low - Contact local gas company.
   c. Burner orifice clogged - Clean burner or replace burner orifice.
10. **Heater produces a whistling noise when main burner is lit.**
    a. Turning control knob to HIGH position when main burner is cold - Turn control knob to LOW position and let warm up for a minute (does not apply to VFRL1810 models)
    b. Air in gas line - Operate burner until air is removed from line. Have gas line checked by local gas company.
    c. Dirty or partially clogged burner orifice - Clean burner or replace burner orifice.

If the gas quality is bad, your pilot may not stay lit, the burners may produce soot and the heater may backfire when lit. If the gas quality or pressure is low, contact your local gas supplier immediately.

DECORATIVE TOP COVER ACCESSORY INSTALLATION

The Decorative Top Cover accessory options are available for your Loft Burner. Choose the proper size Decorative Top Cover listed for use with the Loft burner assembly.

Installation

1. Addition of the Decorative Top Cover accessory should be performed after the Loft burner has been fully installed, secured and tested for leaks. If operating the burner with a Remote Control, make sure all batteries are installed and that the Loft burner operates with the remote correctly.
2. To install, simply place the Decorative Top Cover over the top of the Loft burner and retain by folding over the side tabs to secure the Decorative Top Cover to the Loft Burner.

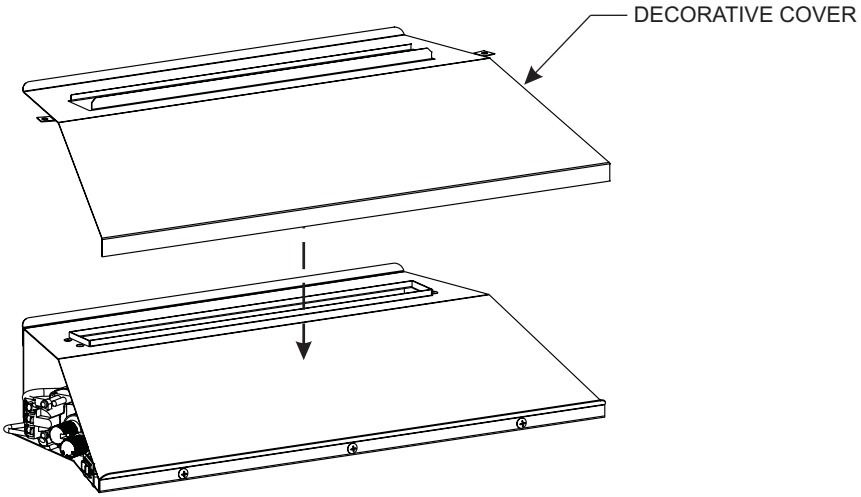

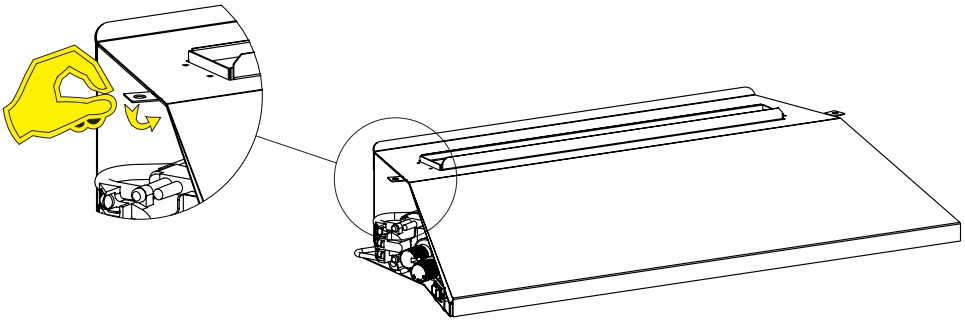

DECORATIVE ACCESSORY INSTALLATION

WARNING: Failure to position the parts in accordance with the diagrams and instructions below or failure to use only parts specifically approved for use with this heater may result in property damage or personal injury.

NOTE: The Loft series burners may be operated with or without the Decorative accessory options. Follow the directions below should you choose to enhance your Loft burner with any one of the available decorative options.

DECORATIVE GLASS ACCESSORY PLACEMENT

The Decorative Glass options are available in various colors and each kit will cover an area of approximately 1 sq. ft. See chart on page 7 for available glass kits.

CAUTION: Use of gloves and eye protection is required while applying the decorative glass.

INSTALLATION

1. Application of the Decorative Glass should only be performed after the Loft burner has been fully installed, secured and tested for leaks. If operating the burner with a Remote Control, make sure all batteries are installed and that the Loft burner operates with the remote correctly.
2. Before applying the glass to the burner top, attach the black silicone "U" channel edges (located in the Instruction Envelope) to each side of the Top Cover. See Figure 29. These "U" channels will help keep the decorative glass from falling over the outside edges of the Top Cover.

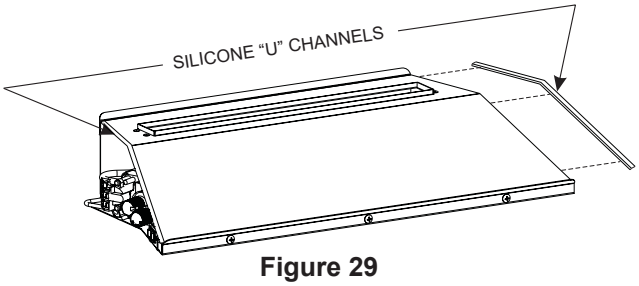

Figure 29

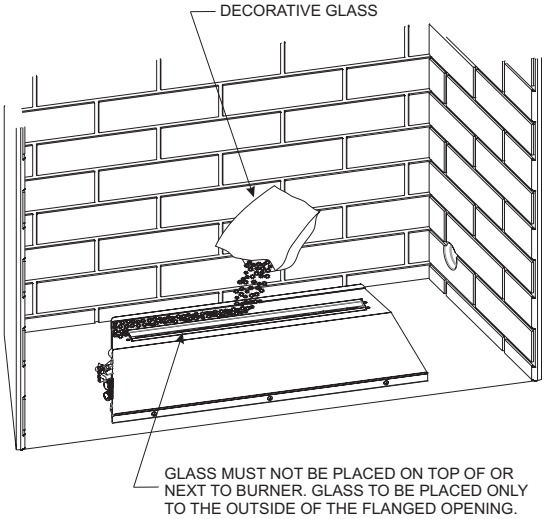

Figure 30

3. To install the Decorative Glass, cut off a corner of the plastic bag and proceed to apply the glass to the rear shelf on the Loft burner (area behind the burner). Apply only enough glass to the Top Cover to cover the black metal surfaces. Do not allow the glass to fall around the burner tube. See Figure 30. Apply the remaining decorative glass to the front sloped surface of the Top Cover. Start by placing the glass along the front edge of the top cover, then gradually place the glass up the sloped top until completely covered. Do not allow the glass to fall around the burner tube. See Figure 31.

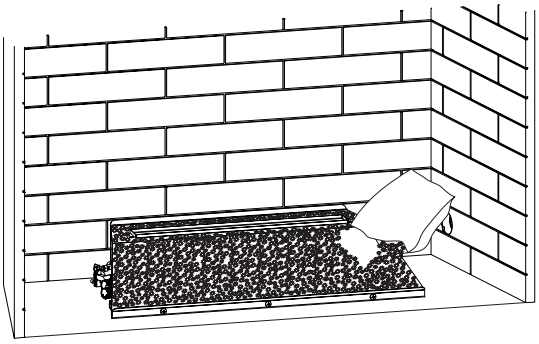

Figure 31

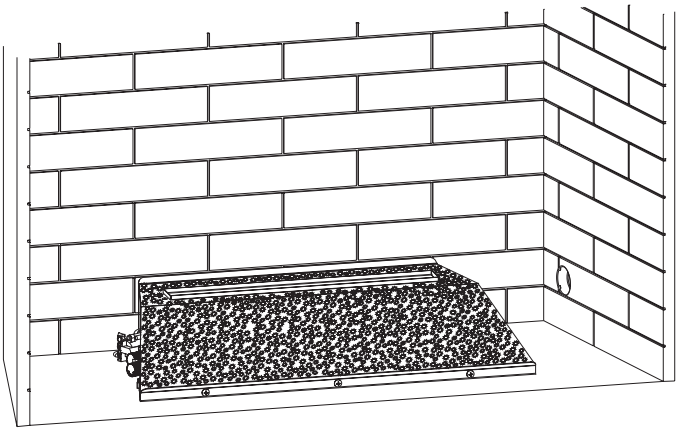

Figure 32

CAUTION: Glass must not be placed around the ends of the Loft burner assembly that would restrict air flow, or cover the gas valve.

VFIL PARTS LIST

Attention: When ordering parts, it is very important that part number and description of part coincide.

INDEX NO.	PART NUMBER			DESCRIPTION
	VFIL18	VFIL24	VFIL30	
1	26526	26543	26551	TOP COVER ASSEMBLY
2	R10410	R10411	R10412	TUBE BURNER
3	R7624	R7624	R7624	AIR SHUTTER - NAT
3	R5695	R5695	R5695	AIR SHUTTER - LP
4	R7572	R7572	R7572	JAMB NUT
5	P208	P245	P265	ORIFICE - LP
5	P286	P270	P209	ORIFICE - NAT
6	P212	P212	P212	ORIFICE FITTING
7	26535	26535	26535	INLET TUBING ASSEMBLY
8	R2423	R2423	R2423	MALE CONNECTOR
9	26653	26653	26653	VALVE SUPPORT PLATE
10	27463	R10563	R10563	VALVE - LP
10	27462	R10562	R10562	VALVE - NAT
11	R5170	R5170	R5170	PILOT ASSEMBLY - LP
11	R5171	R5171	R5171	PILOT ASSEMBLY - NAT
12	26547	26547	26547	TUBING ASSEMBLY - VALVE TO REGULATOR - NAT
13	R7063	R7063	R7063	PILOT REGULATOR - NAT
14	26549	26549	26549	TUBING ASSEMBLY - REGULATOR TO PILOT - NAT
15	26555	26555	26555	TUBING ASSEMBLY - PILOT - LP
16	R11575	R11575	R11575	REMOTE CONTROL KIT (INCLUDES TRANSMITTER, HARNESS, AND RECEIVER)
17	26637	26637	26637	BOTTOM BASE SUPPORT
18	26530	26546	26554	BOTTOM BASE
N/S	R10635	N/A	N/A	MINIMUM RATE SCREW (NAT)
N/S	R10636	N/A	N/A	MINIMUM RATE SCREW (LP)
N/S	R11946	R11946	R11946	IGNITOR WIRE

N/S - Not Shown

USE ONLY MANUFACTURER'S REPLACEMENT PARTS. USE OF ANY OTHER PARTS COULD CAUSE INJURY OR DEATH.

VFIL PARTS VIEW

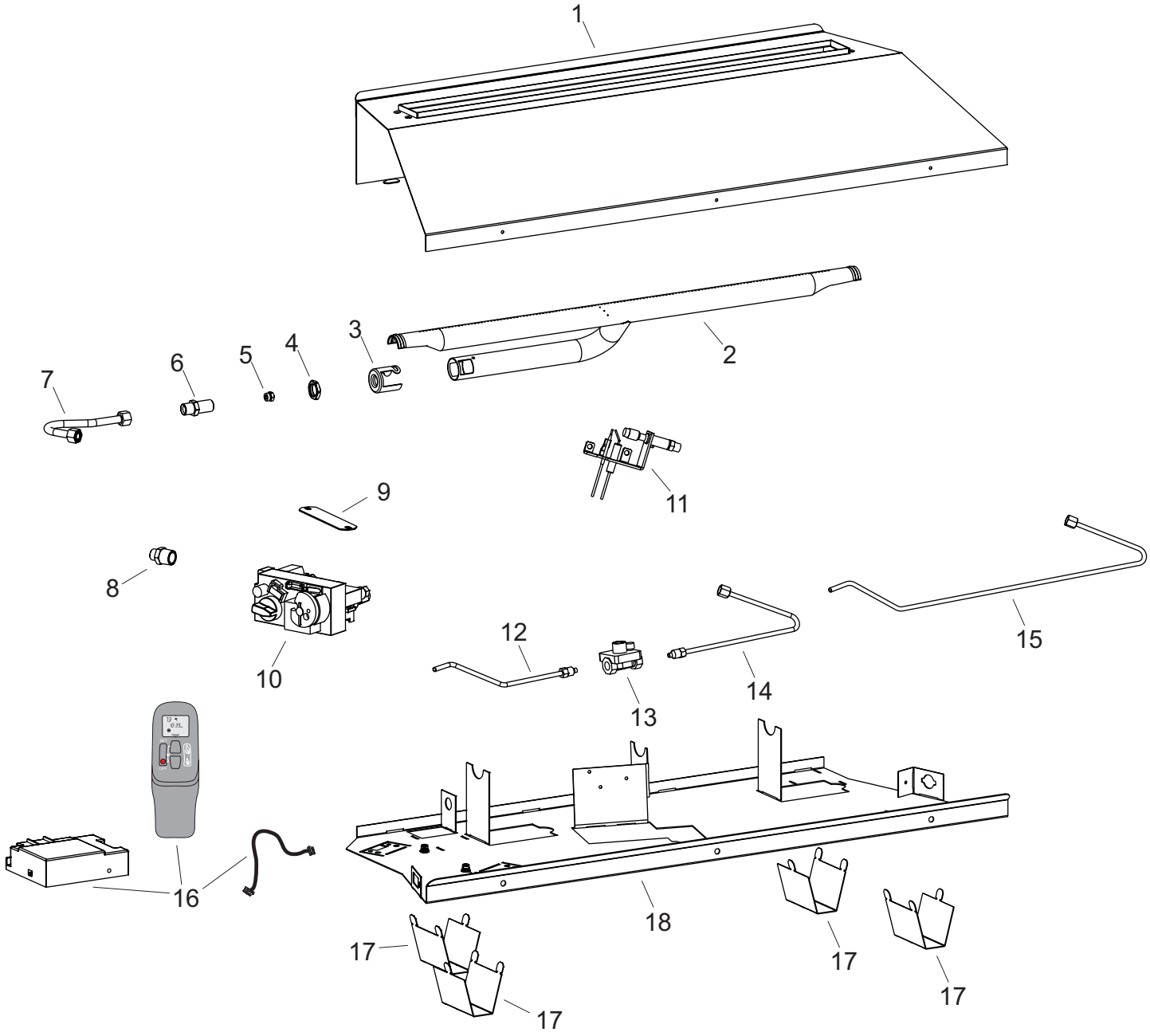

VFRL PARTS LIST

Attention: When ordering parts, it is very important that part number and description of part coincide.

INDEX NO.	PART NUMBER				DESCRIPTION
	VFRL1810	VFRL18	VFRL24	VFRL30	
1	26526	26526	26543	26551	TOP COVER ASSEMBLY
2	R10477	R10410	R10411	R10412	TUBE BURNER
3	R7624	R7624	R7624	R7624	AIR SHUTTER - NAT
3	R7624	R5695	R5695	R5695	AIR SHUTTER - LP
4	R7572	R7572	R7572	R7572	JAMB NUT
5	P193	P214	P245	P265	ORIFICE - LP
5	P214	P285	P270	P209	ORIFICE - NAT
6	P212	P212	P212	P212	ORIFICE FITTING
7	26535	26535	26535	26535	INLET TUBING ASSEMBLY
8	R2423	R2423	R2423	R2423	MALE CONNECTOR
9	R9028	R9028	R9028	R9028	ON/OFF EXTENSION KNOB
10	R9369	R3625	R3625	R3625	VALVE - LP
10	R9368	R3626	R3626	R3626	VALVE - NAT
11	R3623	R3623	R3623	R3623	PILOT ASSEMBLY - LPG
11	R3624	R3624	R3624	R3624	PILOT ASSEMBLY - NAT
12	26536	26536	26536	26536	TUBING ASSEMBLY - VALVE TO REGULATOR - NAT
13	R7063	R7063	R7063	R7063	PILOT REGULATOR - NAT
14	26537	26537	26537	26537	TUBING ASSEMBLY - REGULATOR TO PILOT - NAT
15	26538	26538	26538	26538	TUBING ASSEMBLY - PILOT - LP
16	R10947	R10947	R10947	R10947	WIRE ASSEMBLY
17	R10283	R10283	R10283	R10283	REMOTE OFF/ON SWITCH
18	26530	26530	26546	26554	BOTTOM BASE
19	R9761	R9761	R9761	R9761	PIEZO IGNITOR
20	R5668	R5668	R2792	R2792	IGNITOR WIRE

USE ONLY MANUFACTURER'S REPLACEMENT PARTS. USE OF ANY OTHER PARTS COULD CAUSE INJURY OR DEATH.

VFRL PARTS VIEW

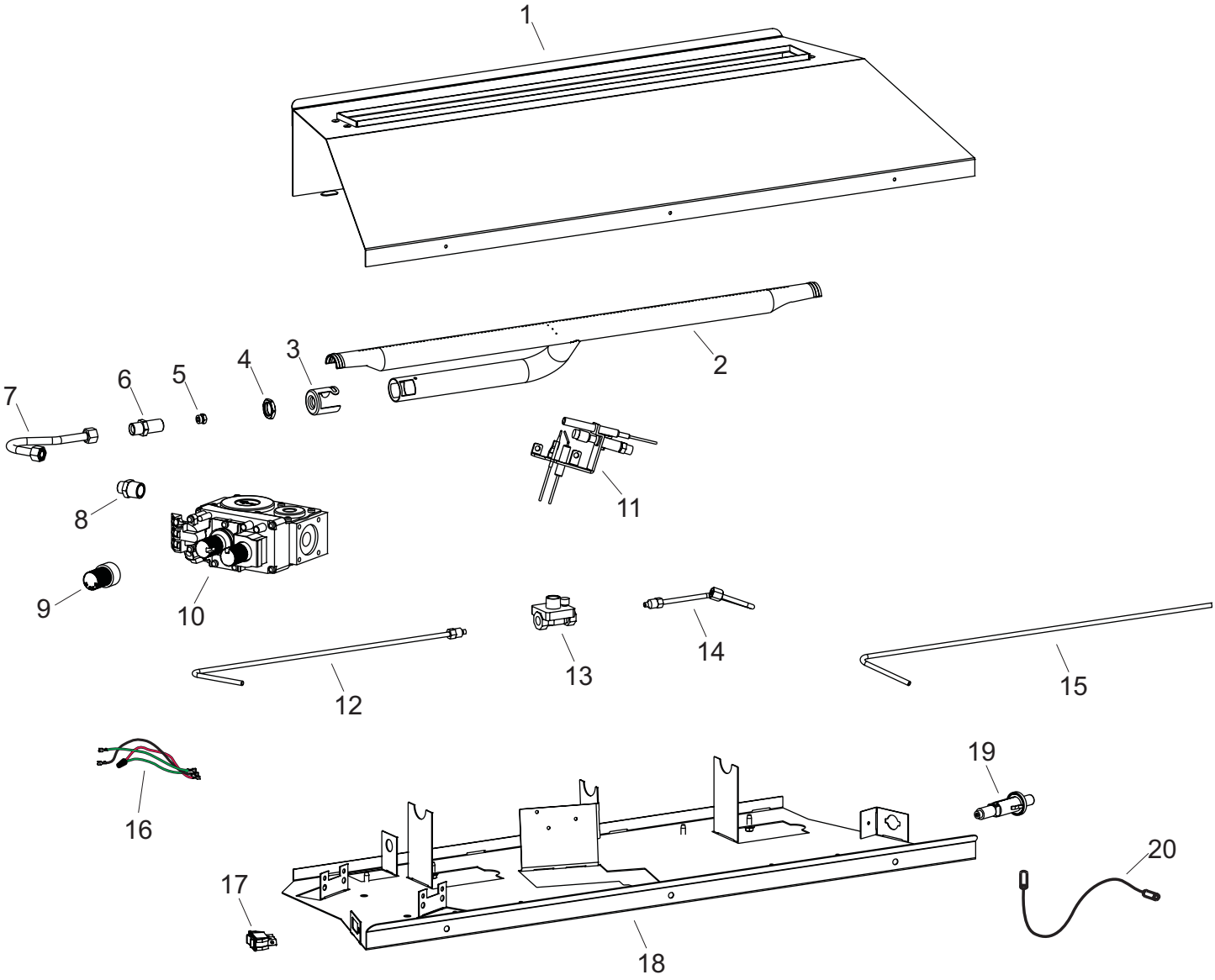

MASTER PARTS DISTRIBUTOR LIST

To Order Parts Under Warranty, please contact your local Empire dealer. See the dealer locator at www.empirecomfort.com. To provide warranty service, your dealer will need your name and address, purchase date and serial number, and the nature of the problem with the unit.

To Order Parts After the Warranty Period, please contact your dealer or one of the Master Parts Distributors listed below. This list changes from time to time. For the current list, please click on the Master Parts button at www.empirecomfort.com. Please note: Master Parts Distributors are independent businesses that stock the most commonly ordered Original Equipment repair parts for Heaters, Grills, and Fireplaces manufactured by Empire Comfort Systems Inc.

Dey Distributing
1401 Willow Lake Boulevard
Vadnais Heights, MN 55101

Phone: 651-490-9191
Toll Free: 800-397-1339
Website: www.deydistributing.com
Parts: Heater, Hearth and Grills

F. W. Webb Company
200 Locust Street
Hartford, CT 06114

Phone: 860-722-2433
Toll Free: 800-243-9360
Fax: 860-293-0479
Toll Free Fax: 800-274-2004
Websites: www.fwwebb.com & www.victormfg.com
Parts: Heater, Hearth and Grills

East Coast Energy Products
10 East Route 36
West Long Branch, NJ 07764

Phone: 732-870-8809
Toll Free: 800-755-8809
Fax: 732-870-8811
Website: www.eastcoastenergy.com
Parts: Heater, Hearth and Grills

HOW TO ORDER REPAIR PARTS

Parts Not Under Warranty

Parts can be ordered through your Service Person, Dealer, or a Master Parts Distributor. See this page for the Master Parts Distributors list. For best results, the **service person or dealer** should order parts through the distributor. Parts can be shipped directly to the **service person/dealer**.

Warranty Parts

Warranty parts will need a proof of purchase and can be ordered by your Service Person or Dealer. Proof of purchase is **required** for warranty parts.

All parts listed in the Parts List have a Part Number. When ordering parts, first obtain the Model Number and Serial Number from the name plate on your equipment. Then determine the Part Number (**not** the Index Number) and the Description of each part from the following illustration and part list. Be sure to give all this information . . .

Appliance Model Number _____ Part Description _____

Appliance Serial Number _____ Part Number _____

Type of Gas (Propane or Natural) _____

Do not order bolts, screws, washers or nuts. They are standard hardware items and can be purchased at any local hardware store.

Shipments contingent upon strikes, fires and all causes beyond our control.

WARRANTY

Empire Comfort Systems Inc. warranties this hearth product to be free from defects at the time of purchase and for the periods specified below. Hearth products must be installed by a qualified technician and must be maintained and operated safely, in accordance with the instructions in the owner's manual. This warranty applies to the original purchaser only and is not transferable. All warranty repairs must be accomplished by a qualified gas appliance technician.

Limited Five-Year Parts & Labor Warranty – All Other Components
(Except Remote Controls, Thermostats, Accessories and Replacement Parts)

Should any part fail because of defective workmanship or material within five years from the date of purchase, Empire will repair or replace at Empire's option. Within five years from the date of purchase, Empire will pay reasonable labor to have that defect repaired at Empire's option.

Limited One-Year Parts Warranty – Remote Controls, Thermostats, Accessories, and Parts

Should any remote control, thermostat, accessory, or other part fail because of defective workmanship within one year from the date of purchase, Empire will repair or replace at Empire's option.

Duties Of The Owner

The appliance must be installed by a qualified installer and operated in accordance with the instructions furnished with the appliance. A bill of sale, cancelled check, or payment record should be kept to verify purchase date and establish warranty period. Ready access to the appliance for service.

What Is Not Covered

Damages that might result from the use, misuse, or improper installation of this appliance.
Travel, diagnostic costs and freight charges on warranted parts to and from the factory.
Claims that do not involve defective workmanship or materials.
Unauthorized service or parts replacements.
Removal and reinstallation cost.
Inoperable due to improper or lack of maintenance.

How To Get Service

To make a claim under this warranty, please have your receipt available and contact your installing dealer. Provide the dealer with the model number, serial number, type of gas, and purchase verification.The installing dealer is responsible for providing service and will contact the factory to initiate any warranted parts replacements. Empire will make replacement parts available at the factory. Shipping expenses are not covered.
If, after contacting your Empire dealer, service received has not been satisfactory, contact: Consumer Relations Department, Empire Comfort Systems Inc., PO Box 529, Belleville, Illinois 62222, or send an e-mail to info@empirecomfort.com with "Consumer Relations" in the subject line.

Your Rights Under State Law

This warranty gives your specific legal rights, and you may also have other rights, which vary from state to state.

Empire Comfort Systems Inc.
Belleville, IL

If you have a general question about our products, please e-mail us at info@empirecomfort.com.

If you have a service or repair question, please contact your dealer.

www.empirecomfort.com